GARMIN

GDC 74(X)
Air Data Computer Installation Manual

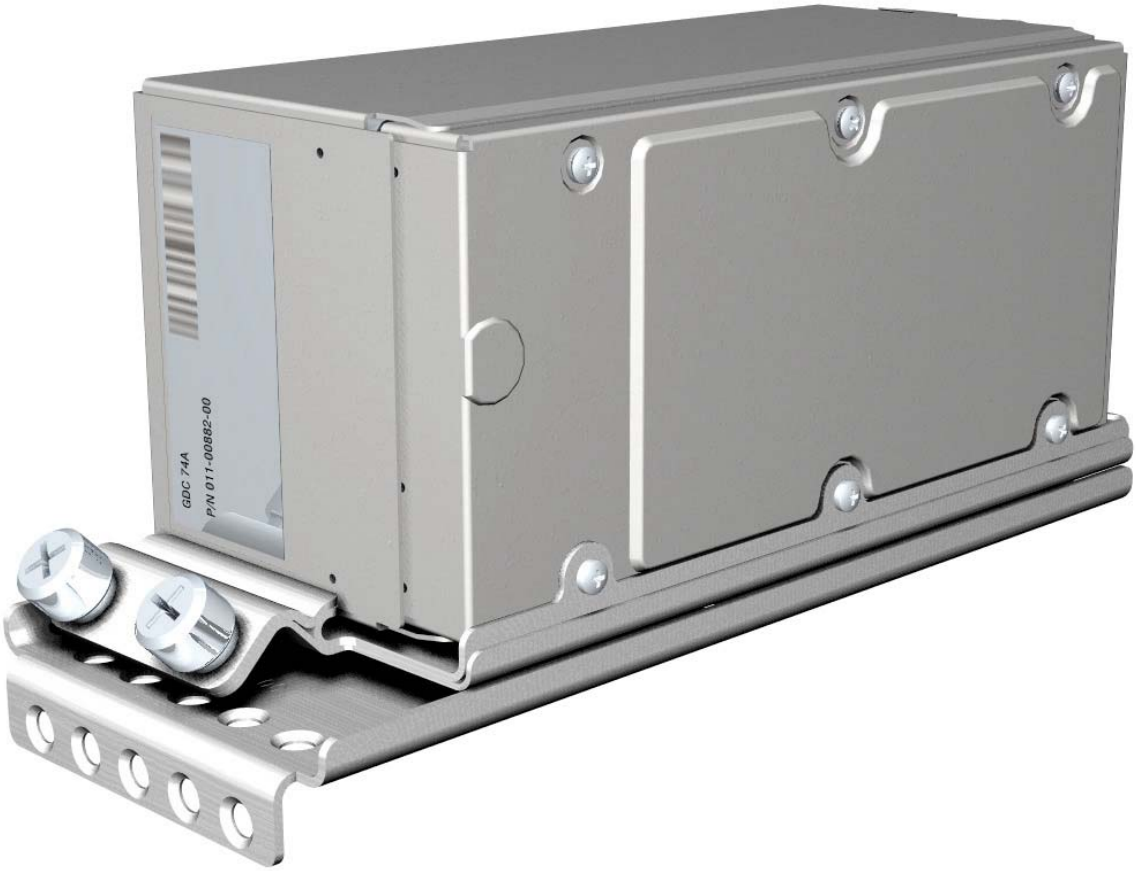

190-00303-15 October, 2009 Revision F

Garmin International, Inc.
1200 E. 151st Street
Olathe, Kansas 66062 U.S.A.
Telephone: 913-397-8200
Aviation Dealer Technical Support Line (Toll Free): (888)-606-5482
www.garmin.com

Garmin (Europe) Ltd
Liberty House
Bulls Copse Road
Hounsdown Business Park
Southampton, SO40 9RB, UK
Telephone: 44/ (0) 870.8501241

RECORD OF REVISIONS

Revision	Revision Date	Description
A	04/23/04	Production Release
B	4/01/06	Update to include the GDC 74B
C	06/19/06	Added GDC 74A 011-00882-10 Version
D	10/29/07	Added 1 year check
E	3/4/08	Updates for GDC 74B ETSO Authorization
F	10/08/09	Added GDC 74H, various updates

DOCUMENT PAGINATION

Section	Page Range
Table of Contents	i — vi
Section 1	1-1 — 1-8
Section 2	2-1 — 2-6
Section 3	3-1 — 3-6
Section 4	4-1 — 4-8
Appendix A	A-1 — A-16
Appendix B	B-1 — B-16
Appendix C	C-1 — C-8
Appendix D	D-1 — D-2
Appendix E	E-1 — E-2

This manual reflects the operation of the GDC 74A, GDC 74B, and GDC 74H with main software version 3.02. Some differences in operation may be observed when comparing the information in this manual to earlier or later software versions.

INFORMATION SUBJECT TO EXPORT CONTROL LAWS

This document may contain information which is subject to the Export Administration Regulations ("EAR") issued by the United States Department of Commerce (15 CFR, Chapter VII Subchapter C) and which may not be exported, released or disclosed to foreign nationals inside or outside the United States without first obtaining an export license. The preceding statement is required to be included on any and all reproductions in whole or in part of this manual.

WARNING

This product, its packaging, and its components contain chemicals known to the State of California to cause cancer, birth defects, or reproductive harm. This Notice is being provided in accordance with California's Proposition 65. If you have any questions or would like additional information, please refer to our web site at www.garmin.com/prop65.

NOTE

References made to the GDC 74(X) throughout this document apply equally to the GDC 74A, the GDC 74B, and the GDC 74H except where specifically noted.

CURRENT REVISION DESCRIPTION

Revision	Page Number(s)	Section Number	Description of Change
F	i	TOC	Added references to GDC 74H and Current Revision Table
	vi	TOC	Added GDC 74B (-01) and 74H Mod Level tables
	1-1	1.2	Added reference to GDC 74H
	1-3	1.4.2	Added GDC 74H info to Table 1-2
	1-4	1.5.1	Added reference to GDC 74H
	1-5	1.6	Added 190-00313-11 to Table 1-8
	2-1	2.1	Changed AC 43.13-2A to AC 43.13-2B, updated Figure 2-1
	2-2	2.6.1	Added GDC 74B (-01) and GDC 74H info
	2-3	2.6.2	Added jackscrew connector kit, and references to GDC 74H
	2-5	2.9	Rearranged to clarify that GDC 74H does not use G1000 mounting rack, renamed Figure 2-2
	3-1	3.2	Changed 011-01110-00 to -0X, Updated items in Table 3-2
	3-2	3.3	Added jackscrew backshell install info
	3-5	3.5	Added reference to Figure C-1
	3-6	3.6	Added Installation instructions for the GDC 74H
		3.8.1, 3.8.2	Updated maintenance info
	B-1–B-16	Appdx B	Changed 011-01110-00 to -0X for GDC 74B -01 version
	C-1–C-8	Appdx C	Added new Appendix for GDC 74H
	D-1–D-2	Appdx D	Combined Figures A-5 and B-5 into Appdx D
	E-1–E-2	Appdx E	Corrected pin numbers

TABLE OF CONTENTS

LIST OF ILLUSTRATIONS

LIST OF TABLES

TABLE PAGE

GDC 74(X) HARDWARE MOD LEVEL HISTORY

The following table identifies hardware modification (Mod) Levels for the GDC 74(X) Air Data Computer. Mod Levels are listed with the associated service bulletin number, service bulletin date, and the purpose of the modification. The table is current at the time of publication of this manual (see date on front cover) and is subject to change without notice. Authorized Garmin Sales and Service Centers are encouraged to access the most up-to-date bulletin and advisory information on the Garmin Dealer Resource web site at www.garmin.com using their Garmin-provided user name and password.

GDC 74A (-00) HARDWARE MOD LEVEL HISTORY

MOD LEVEL	SERVICE BULLETIN NUMBER	SERVICE BULLETIN DATE	PURPOSE OF MODIFICATION

GDC 74A (-01) HARDWARE MOD LEVEL HISTORY

MOD LEVEL	SERVICE BULLETIN NUMBER	SERVICE BULLETIN DATE	PURPOSE OF MODIFICATION

GDC 74A (-10) HARDWARE MOD LEVEL HISTORY

MOD LEVEL	SERVICE BULLETIN NUMBER	SERVICE BULLETIN DATE	PURPOSE OF MODIFICATION
1	N/A	N/A	Improves altitude stability.

GDC 74B (-00) HARDWARE MOD LEVEL HISTORY

MOD LEVEL	SERVICE BULLETIN NUMBER	SERVICE BULLETIN DATE	PURPOSE OF MODIFICATION
1	N/A	N/A	Improves altitude stability.

GDC 74B (-01) HARDWARE MOD LEVEL HISTORY

MOD LEVEL	SERVICE BULLETIN NUMBER	SERVICE BULLETIN DATE	PURPOSE OF MODIFICATION

GDC 74H HARDWARE MOD LEVEL HISTORY

MOD LEVEL	SERVICE BULLETIN NUMBER	SERVICE BULLETIN DATE	PURPOSE OF MODIFICATION

1 GENERAL DESCRIPTION

1.1 Introduction

This manual presents mechanical and electrical installation requirements for installing the Garmin GDC 74(X) Air Data Computer as part of the G1000 Integrated Flight Deck. The GDC 74(X) can be incorporated into a variety of airframes under appropriate Type Certificate (TC) or Supplemental Type Certificate (STC) requirements. Each airframe installation may vary. Use only approved (type or supplemental type) data for specific installation instructions in a particular aircraft.

1.2 Equipment Description

The Garmin GDC 74(X) Air Data Computer is a remote mounted device that provides air data for flight instrumentation. The system measures aircraft static and impact pressure information from pressure transducers and raw air temperature from an outside temperature probe. Using the raw data from the appropriate sensors, the unit computes pressure altitude, vertical speed, airspeed values, air temperature information and density altitude. Aircraft specific configuration parameters are stored in an external configuration module to make the GDC 74(X) a Line Replaceable Unit (LRU).

The system provides pitot-static and temperature derived air data to the G1000 GIA 63 Integrated Avionics Unit and the GDU Primary Flight Displays.

The GDC 74(X) provides the following information in ARINC 429 format:

- Air Temperature (total air temperature, outside/static air temperature)
- Corrected Static Pressure
- Density Altitude
- Impact Pressure Uncorrected
- Indicated Airspeed
- Mach Number
- Pressure altitude
- Total Pressure
- True Airspeed
- Vertical Speed

In addition to providing all the above listed functions of the GDC 74A and GDC 74H, the GDC 74B is RVSM (Reduced Vertical Separation Minimums)-capable. Also, the GDC 74B's software implements airframe-specific SSEC (Static Source Error Correction) equations that correct for changes in the measured air pressure. These changes in pressure are due to disturbances created by the aircraft in flight. Additionally, the GDC 74B supports installation-specific external sensor data, such as angle of attack.

1.3 Interface Summary

The GDC 74(X) provides the following interface connections via the rear connector. See Section 4 and Appendix E for connection details.

- ARINC 429 Output to GRS 77 AHRS
- 2 ARINC 429 Outputs to GDU PFD/MFD and GIA Integrated Avionics Units
- 4 ARINC 429 Inputs from external sensors (as applicable per installation)
- RS-232 Interface with GIA Integrated Avionics Units
- 2 Aircraft Power Inputs
- Temperature Probe Interface for GTP 59 or other supported probe

1.4 Technical Specifications

1.4.1 Environmental Qualification Form

It is the responsibility of the installing agency to obtain the latest revision of the GDC 74(X) Environmental Qualification Form. These forms are available directly from Garmin under the following part numbers.

Table 1-1. EQF Part Numbers

Part Number	Document
005-00191-77	GDC 74A Environmental Qualification Form (also applies to GDC 74H)
005-00253-77	GDC 74B Environmental Qualification Form
005-00191-97	GTP 59 Environmental Qualification Form

To obtain a copy of these forms, see the dealer/OEM portion of the Garmin web site (www.garmin.com).

1.4.2 General Environmental Specifications

NOTE

The GDC 74(X) may require a warm-up period of 15 minutes to reach full accuracy (30 minutes if the environmental temperature is less than 0°C).

The following table presents general environmental specifications.

Table 1-2. General Environmental Specifications

Specification	Characteristic
Regulatory Compliance	RTCA/DO-160D Environmental Conditions and EUROCAE/ED-14D
Unit Software	RTCA/DO-178B Level B
Aircraft Pressure Altitude Range	-1,400 feet to 50,000 Feet
Aircraft Vertical Speed Range	-20,000 feet per minute to +20,000 feet per minute
Aircraft Airspeed Range	450 Knots
Aircraft Mach Range	<1.00 Mach
Aircraft Total Air Temperature Range	-85°C to +85°C
Unit Operating Temperature Range	-55°C to +70°C
GDC 74A & GDC 74B Weight	(Unit Only) 1.60 lbs. (0.73 kg)
GDC 74H Weight	(Unit Only) 1.70 lbs. (0.77 kg)
GDC 74H Vibration Level	Meets DO-160F Category U, Curve G and DO-160D Cat S, Curve B vibration levels
GDC 74(X) Connector	0.22 lbs (0.10 kg)
GDC 74A (011-00882-00 and 011-00882-01 only) Physical Dimensions:	Height: 3.23 inches (8.20 cm) Width: 3.05 inches (7.75 cm) Length: 6.44 inches (16.36 cm) Length With Rack & Connector: 9.50 inches (24.13 cm)
GDC 74A (011-00882-10 only) and GDC 74B (011-01110-0X) Physical Dimensions:	Height: 3.22 inches (8.18 cm) Width: 3.05 inches (7.75 cm) Length: 6.48 inches (16.46 cm) Length With Rack & Connector: 9.50 inches (24.13 cm)
GDC 74H Physical Dimensions:	Height: 3.06 inches (8.18 cm) Width: 3.05 inches (7.75 cm) Length: 7.40 inches (18.80 cm) Length With Connector: 8.87 inches (22.53 cm)*
GDC 74A & GDC 74B Mounting Rack* Physical Dimensions: Weight:	Rack Length: 7.80 inches (19.81 cm) Rack Width: 3.10 inches (7.87 cm) Rack Weight: 0.33 lbs. (0.15 kg) G1000 Rack Adapter 0.16 lbs. (0.07kg)

*GDC 74H does not use mounting rack

Specification	Characteristic
Power Requirements	Supply Voltage: 14/28 Vdc; See the Environmental Qualification Form for details on surge ratings and minimum/maximum operating voltages. Operating Current: +70°C: 27.5 Vdc 200 mA, 13.8 Vdc 410 mA -55°C: 27.5 Vdc 235 mA, 13.8 Vdc 480 mA +25°C: 27.5 Vdc 200 mA, 13.8 Vdc 410 mA

1.5 Certification

The conditions and tests required for TSO approval of this article are minimum performance standards. It is the responsibility of those installing this article either on or within a specific type or class of aircraft to determine that the aircraft installation conditions are within the TSO standards. TSO articles must have separate approval for installation in an aircraft. The article may be installed only if performed under 14 CFR part 43 or the applicable airworthiness requirements. At the time of publication, installation of this TSO approved article is only approved when installed in an aircraft as part of a Garmin G1000 system.

1.5.1 TSO/ETSO Compliance

The following table provides a list of applicable TSO/ETSOs for the GDC 74(X) & GTP 59.

Table 1-3. Applicable TSO/ETSOs for the GDC 74A and GDC 74H

Function	TSO/ETSO	Applicable LRU SW Part Numbers	Applicable CLD Part Numbers
Air Data Computer	TSO-C106 ETSO-C106	006-B0261-(__)*	006-C0055-0(_)

*See Table 2-1 for software/hardware compatibility.

Table 1-4. Applicable TSO/ETSOs for the GDC 74B

Function	TSO/ETSO	Applicable LRU SW Part Numbers	Applicable CLD Part Numbers
Air Data Computer	TSO-C106 ETSO-C106	006-B0261-1(_) 006-B0261-B(_) 006-B0261-F(_)	006-C0055-0(_)

Table 1-5. Applicable TSO/ETSOs for the GTP 59

Function	TSO/ETSO	Applicable LRU SW Part Numbers	Applicable CLD Part Numbers
Air Data Computer	TSO-C106 ETSO-C106	Not Applicable	Not Applicable

1.5.2 TSO/ETSO Deviations

The following deviations have been requested and granted for the GDC 74(X):

Table 1-6. TSO/ETSO Deviations for the GDC 74(X)

TSO/ETSO	Deviation
TSO-C106	1. Garmin was granted a deviation from TSO-C106 to use RTCA DO-160D, including changes 1, 2, and 3, instead of RTCA DO-160B as the standard for Environmental Conditions and Test Procedures for Airborne Equipment.
	2. Garmin was granted a deviation from TSO-C106 to use RTCA DO-178B instead of RTCA DO-178A as the standard for Software Considerations in Airborne Systems and Equipment Certification.
	3. Garmin was granted a deviation from TSO-C106 to use Society of Automotive Engineers (SAE) AS 8002 Rev A instead of SAE AS 8002 as the Minimum Performance Standard.
ETSO-C106	1. Garmin was granted a deviation from ETSO-C106 to use Society of Automotive Engineers (SAE) AS 8002 Rev A instead of SAE AS 8002 as the Minimum Performance Standard.

The following deviations have been requested and granted for the GTP 59:

Table 1-7 TSO/ETSO Deviations for the GTP 59

TSO/ETSO	Deviation
TSO-C106	1. Garmin was granted a deviation from TSO-C106 to use RTCA DO-160D, including changes 1, 2, and 3, instead of RTCA DO-160B as the standard for Environmental Conditions and Test Procedures for Airborne Equipment.
	2. Garmin was granted a deviation from TSO-C106 to use Society of Automotive Engineers (SAE) AS 8002 Rev A instead of SAE AS 8002 as the Minimum Performance Standard.
ETSO-C106	1. Garmin was granted a deviation from ETSO-C106 to use Society of Automotive Engineers (SAE) AS 8002 Rev A instead of SAE AS 8002 as the Minimum Performance Standard.

1.6 Reference Documents

The following publications are sources of additional information for installing the GDC 74(X). Before installing the unit, the technician should read all referenced materials along with this manual.

Table 1-8. Reference Documents

Part Number	Document
190-00303-00	G1000 System Installation Manual
190-00313-03	G1000 Spider Installation Instructions
190-00313-09	G1000 Shield Block Installation Instructions
190-00313-11	G1000 Jackscrew Backshell Installation Instructions

1.7 Limited Warranty

This Garmin product is warranted to be free from defects in materials or workmanship for two years from the date of purchase. Within this period, Garmin will at its sole option, repair or replace any components that fail in normal use. Such repairs or replacement will be made at no charge to the customer for parts or labor, provided that the customer shall be responsible for any transportation cost. This warranty does not cover failures due to abuse, misuse, accident or unauthorized alteration or repairs.

THE WARRANTIES AND REMEDIES CONTAINED HEREIN ARE EXCLUSIVE AND IN LIEU OF ALL OTHER WARRANTIES EXPRESS OR IMPLIED OR STATUTORY, INCLUDING ANY LIABILITY ARISING UNDER ANY WARRANTY OF MERCHANTABILITY OR FITNESS FOR A PARTICULAR PURPOSE, STATUTORY OR OTHERWISE. THIS WARRANTY GIVES YOU SPECIFIC LEGAL RIGHTS, WHICH MAY VARY FROM STATE TO STATE.

IN NO EVENT SHALL GARMIN BE LIABLE FOR ANY INCIDENTAL, SPECIAL, INDIRECT OR CONSEQUENTIAL DAMAGES, WHETHER RESULTING FROM THE USE, MISUSE, OR INABILITY TO USE THIS PRODUCT OR FROM DEFECTS IN THE PRODUCT. Some states do not allow the exclusion of incidental or consequential damages, so the above limitations may not apply to you.

Garmin retains the exclusive right to repair or replace the unit or software or offer a full refund of the purchase price at its sole discretion. SUCH REMEDY SHALL BE YOUR SOLE AND EXCLUSIVE REMEDY FOR ANY BREACH OF WARRANTY.

To obtain warranty service, contact your local Garmin Authorized Service Center. For assistance in locating a Service Center near you, call Garmin Customer Service at one of the numbers shown below.

Products sold through online auctions are not eligible for rebates or other special offers from Garmin. Online auction confirmations are not accepted for warranty verification. To obtain warranty service, an original or copy of the sales receipt from the original retailer is required. Garmin will not replace missing components from any package purchased through an online auction.

Garmin International, Inc.
1200 E. 151st Street
Olathe, KS 66062, U.S.A.
Phone: 800/800.1020
FAX: 913/397.0836

Garmin (Europe) Ltd.
Liberty House
Bulls Copse Road
Hounsdown Business Park
Southampton, SO40 9RB, UK
Telephone: 44/ (0) 870.8501241

2 INSTALLATION OVERVIEW

2.1 Introduction

This section provides hardware equipment information for installing the GDC 74(X) Air Data Computer. Installation of the GDC 74(X) should follow the aircraft Type Certificate (TC) or Supplemental Type Certificate (STC) requirements. Cabling and hoses are fabricated by the installing agency to fit each particular aircraft. The guidance of FAA advisory circulars AC 43.13-1B and AC 43.13-2B, where applicable, may be found useful for making retro-fit installations that comply with FAA regulations. Refer to the G1000 System Installation Manual, Garmin part number 190-00303-00 for further details on the mechanical aspects of the G1000 system.

2.2 Wiring

Use AWG #24 or larger wire for all connections unless otherwise specified by the aircraft manufacturer or Garmin. The standard pin contacts supplied in the connector kit are compatible with up to AWG #22 wire. In cases where some installations have more than one unit sharing a common circuit breaker, sizing and wire gauge is based on aircraft circuit breaker layout, length of wiring, current draw of units, and internal unit protection characteristics. Do not attempt to combine more than one unit on the same circuit breaker unless it is specified on aircraft manufacturer approved drawings.

In some cases, a larger gauge wire such as AWG #18 or #16 may be needed for power connections. The provided connector kit supplies extended barrel contacts for AWG #16 and #18 wire, if required. Special thin-wall heat shrink tubing is also provided to insulate the extended barrels inside the backshell. If using #16 or #18 barrel contacts, ensure that no two contacts are mounted directly adjacent to each other. This minimizes the risk of contacts touching and shorting to adjacent pins or to ground.

Ensure that routing of the wiring does not come in contact with sources of heat, RF or EMI interference. Check that there is ample space for the cabling and mating connectors. Avoid sharp bends in cabling and routing near aircraft control cables.

2.3 Pneumatic Plumbing

The GDC 74(X) has two ports that are connected to the aircraft's pitot pressure source and static pressure source. The two ports are labeled on the unit (Figure 2-1). The pressure ports have 1/8-27 ANPT female threads. The mating fitting must have 1/8-27 ANPT male threads.

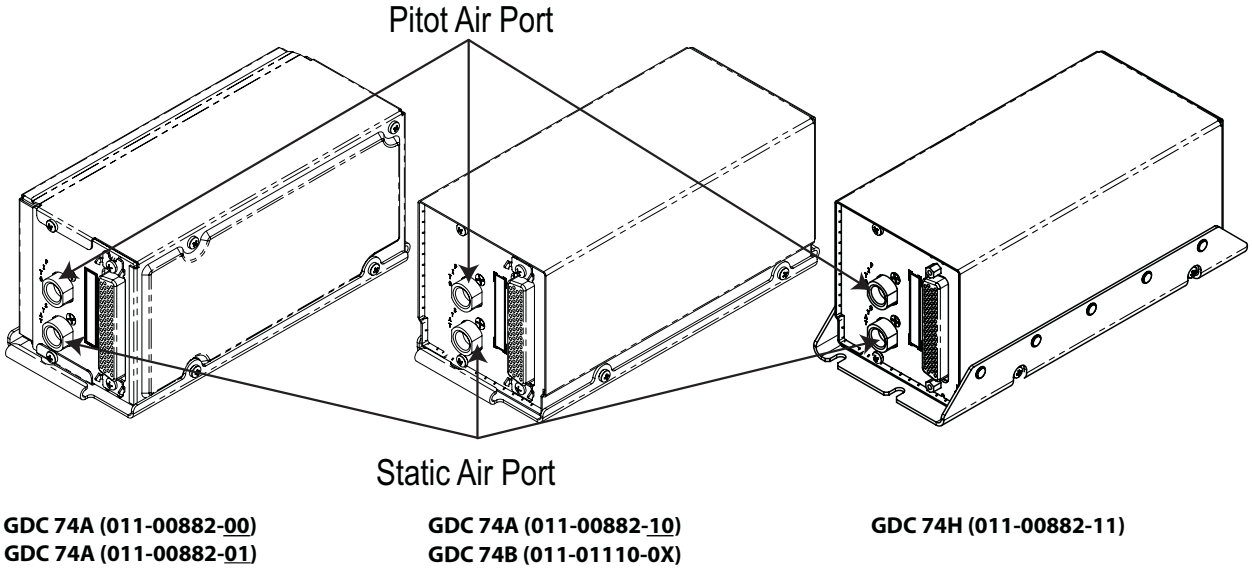

Figure 2-1. GDC 74A, GDC 74B, & GDC 74H Air Hose Fitting Locations

Use appropriate air hoses and fittings to connect the pitot and static lines to the unit. Avoid sharp bends and routing near aircraft control cables. The GDC 74(X) should not be at the low point of the pitot or static plumbing lines, to avoid moisture or debris collecting at or near the unit. Ensure that no deformations of the airframe surface have been made that would affect the relationship between static air pressure and true ambient static air pressure for any flight condition. Refer to part 43, Appendix E for approved practices while installing hoses and connections.

2.4 Cooling Air

No cooling air is needed for the GDC 74(X).

2.5 GTP 59 Icing

The GTP 59 OAT probe has no icing protection. If ice accumulates on the GTP 59 OAT probe, its accuracy is unknown. Consequently, air temperature measurements may be incorrect if ice accumulates on the probe. Furthermore, computations dependent upon air temperature measurements may be affected (e.g. true airspeed and delta-ISA).

2.6 Installation Material

2.6.1 Available Configurations

Table 2-1 lists the available configurations of the GDC 74(X).

Table 2-1. Available Configurations

Model	Catalog Part Number	Unit Part Number	Applicable LRU SW Part Numbers
GDC 74A	010-00336-00*	011-00882-00*	006-B0261-(__)
GDC 74A	010-00336-03*	011-00882-01*	006-B0261-(__)
GDC 74A	010-00336-10	011-00882-10	All 006-B0261-(__) except 006-B0261-00 through 006-B0261-10
GDC 74H	010-00336-11	011-00882-11	All 006-B0261-(__) except 006-B0261-00 through 006-B0261-10
GDC 74B	010-00390-00	011-01110-00	006-B0261-1(_) 006-B0261-B(_) 006-B0261-F(_)
GDC 74B	010-00390-01	011-01110-01	006-B0261-1(_) 006-B0261-B(_) 006-B0261-F(_)

*Garmin does not recommend the use of an 011-00882-00 or 011-00882-01 for new TC/STC approvals. The 011-00882-10 supersedes these units.

2.6.2 Available Equipment

Table 2-2 lists the available equipment for the GDC 74(X). The 011-00915-00 is listed as the preferred nutplate kit, as it is applicable for most installations. The 2 nutplate kits listed as alternates are rarely used.

Table 2-2. Available Equipment

Item	Garmin Part Number
GTP 59 OAT Probe Kit	011-00978-00
Sub Assy, Connector Kit, GDC 74(X)	011-01010-00
Sub-Assy, Conn Kit, SB, GDC 74(X)	011-01010-01
Sub-Assy, Conn Kit, Jackscrew, GDC74(X)	011-01010-03
Remote Mounting Rack, GDC 74(X)*	011-01011-00
G1000 Adapter Plate, GDC 74(X)*	011-01014-00
G1000 Rack Nutplate Kit, 2 pos. GDC 74(X) (preferred)*	011-00915-00
G1000 Rack Nutplate Kit, 2+3 pos. GDC 74(X) (preferred)*	011-00915-02
G1000 Rack Nut Plate Kit, 2 pos. GDC 74(X) (alternate)*	011-01148-00
G1000 Rack Nut Plate Kit, 2 + 3 pos. GDC 74(X) (alternate)*	011-01148-02

*Not applicable to the GDC 74H

Table 2-3 shows the GTP 59 Outside Air Temperature (OAT) Probe kit. The GTP 59 probe has an attached pigtail. See Figure D-1 for GTP 59 installation.

Table 2-3. OAT Probe Kit, 011-00978-00

Item	Description	Garmin Part Number
Nut	Nut, 5/16”, Hex, Skirt	210-00055-00
Screw, Qty. (2)	Screw, 4-40 x .250, PHP, SS/P, w/NYL	211-60234-08
Washer	Washer, Lock, Self-Sealing, 5/16	212-00026-00
Contact Pins, Qty. (5)	Contact, Pin, Mil Crimp, Size 22D	336-00021-00
GTP 59 OAT Probe	Outside Air Temperature Sensor	494-00022-xx

2.6.3 Additional Equipment Required

- Cables - The installer will supply all system cables including circuit breakers. Cable requirements and fabrication is detailed in Section 3 of this manual.
- Hardware - #6-32 x 100° SS Screw (6 ea.). Hardware required to mount the installation rack is not provided.
- Air hoses and fittings to connect pitot and static air to the GDC 74(X). The GDC 74(X) has a female 1/8-27 ANPT fitting for each pitot and static port. Use appropriate aircraft fittings to connect to pitot and static system lines.

2.7 Cable Location Considerations

Use cable meeting the applicable aviation regulation for the interconnect wiring. Any cable meeting specifications is acceptable for the installation. When routing cables, observe the following precautions:

- All cable routing should be kept as short and as direct as possible.
- Avoid sharp bends.
- Avoid routing cables near power sources (e.g., 400 Hz generators, trim motors, etc.) or near power for fluorescent lighting.

2.8 Installation Approval Considerations for Pressurized Aircraft

Cable installations on pressurized cabin aircraft require FAA approved installation design and engineering substantiation data whenever such installations incorporate alteration (penetration) of the cabin pressure vessel by connector holes and/or mounting arrangements.

For needed engineering support pertaining to the design and approval of such pressurized aircraft installations, it is recommended that the installer proceed according to any of the following listed alternatives:

1. Obtain approved installation design data from the aircraft manufacturer.

2. Obtain an FAA approved Supplemental Type Certificate (STC) pertaining to and valid for the subject installation.

3. Contact the FAA Aircraft Certification Office in the appropriate Region and request identification of FAA Designated Engineering Representatives (DERs) who are authorized to prepare and approve the required installation engineering data.

4. Obtain FAA Advisory Circular AC-183C and select (and contact) a DER from the roster of individuals identified thereunder.

5. Contact an aviation industry organization such as the Aircraft Electronics Association and request their assistance.

2.9 GDC 74(X) Mounting

The mounting surface for the GDC 74(X) must be capable of providing structural support and electrical bond to the aircraft to minimize radiated EMI and provide protection from High-Intensity Radiation Fields (HIRF). The GDC 74(X) may be mounted remotely if desired. The GDC 74(X) can be oriented in any position from horizontal to 45° past vertical. Figures A-4, B-4, and C-2 show the acceptable range of mounting orientation. The installer must provide any additional remote mounting equipment.

The GDC 74A/GDC 74B can be mounted using the G1000 main system rack with adapter plate (Figure 2-2). The GDC 74H cannot be mounted using the G1000 main system rack with adapter plate. The unit rack is fastened to the main system rack using the nutplate kit listed in Section 2.6.2. Refer to Figure A-3 or B-3 (as appropriate for unit being installed) for nutplate placement locations.

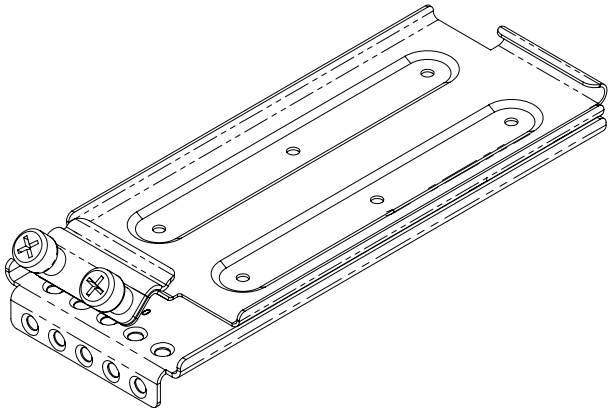

Figure 2-2. GDC 74A/GDC 74B Unit Rack w/Adapter Plate

This page intentionally left blank

3 INSTALLATION PROCEDURE

3.1 Unpacking Unit

Carefully unpack the equipment and make a visual inspection of the unit for evidence of damage incurred during shipment. If the unit is damaged, notify the carrier and file a claim. To justify a claim, save the original shipping container and all packing materials. Do not return the unit to Garmin until the carrier has authorized the claim.

Retain the original shipping containers for storage. If the original containers are not available, a separate cardboard container should be prepared that is large enough to accommodate sufficient packing material to prevent movement.

3.2 Electrical Connections

All electrical connections to the GDC 74(X) are made through one 78-pin D-subminiature connector (see Figure 4-1). Tables in Section 4 define the electrical characteristics of all input and output signals. Required connector and associated hardware are supplied in the GDC 74(X) connector kit (P/N 011-01010-0X). See also interconnect wiring diagram Figure E-1.

CAUTION

Check wiring connections for errors before inserting connectors into the GDC 74(X). Incorrect wiring could cause internal component damage.

Table 3-1. Pin Contact Part Numbers

Manufacturer	78 pin D-Subminiature connector (P741)		
	16 AWG (Power Only)	18-20 AWG (Power Only)	22-28 AWG
Garmin P/N	336-00044-01	336-00044-00	336-00021-00
Military P/N	N/A	N/A	M39029/58-360
AMP	N/A	N/A	204370-2
Positronic	N/A	N/A	MC8522D
ITT Cannon	N/A	N/A	030-2042-000

Table 3-2. Recommended Crimp Tools

Manufacturer	Hand Crimping Tool	18-20 AWG		22-28 AWG	
		Positioner	Insertion/ Extraction Tool (Note 2)	Positioner	Insertion/ Extraction Tool
Military P/N	M22520/2-01	N/A	M81969/1-04	M22520/2-09	M81969/1-04
Positronic	9507	9502-11	M81969/1-04	9502-4	M81969/1-04
ITT Cannon	995-0001-584	N/A	N/A	M22520/2-09	274-7048-000
AMP	601966-1	N/A	91067-1	601966-6	91067-1
Daniels	AFM8	K774	M81969/1-04	K42	M81969/1-04
Astro	615717	N/A	M81969/1-04	615725	M81969/1-04

NOTES

1. Non-Garmin part numbers shown are not maintained by Garmin and consequently are subject to change without notice.
2. Extracting the #16, #18 and #20 contact requires that the expanded wire barrel be cut off from the contact. It may also be necessary to push the pin out from the face of the connector when using an extractor due to the absence of the wire. A new contact must be used when reassembling the connector.
3. For applications using 16 AWG wire, contact Garmin for information regarding connector crimp positioner tooling.

3.3 Backshell Assembly

The GDC 74A and GDC 74B connector kit includes a Garmin slidelock backshell assembly. Garmin's backshells give the installer the ability to quickly and easily terminate shield grounds at the backshell housing using one of two methods available. To assemble the connector backshell and grounding system, refer to instructions provided in the SPIDER Installation Instructions (190-00313-03) or Shield Block Installation Instructions (190-00313-09).

The GDC 74H connector kit includes a Garmin jackscrew backshell assembly. To assemble the jackscrew connector, refer to instructions provided in the Jackscrew Backshell Installation Instructions (190-00313-11).

NOTE

The SPIDER grounding method is permitted for previous GDC 74A installations, however Garmin recommends the use of the Shield Block grounding method for all new installations. Installations already certified with 011-00882-00 and SPIDERs may use the 011-00882-10 with SPIDERs in the same installations. Garmin requires the use of the shield block for all new GDC 74A installations, and all GDC 74B and GDC 74H installations.

3.4 GTP 59 OAT Probe Installation

NOTE

The following instructions are general guidance. The GTP 59 can be incorporated into a variety of airframes under appropriate Type Certificate (TC) or Supplemental Type Certificate (STC) requirements. Each airframe installation may vary. Use only approved (type or supplemental type) data for specific installation instructions in a particular aircraft.

Table 3-3 lists parts needed for the GTP 59 installation and interconnect harness. Reference numbers in the table and instructions refer to item bubble numbers shown in Figure D-1.

Table 3-3. Parts Needed for GTP 59 Installation

Figure D-1 Ref	Description	Qty. Included	GPN or MIL Spec
2 Through 6, 11	OAT Probe Kit		011-00978-00
1	Shield Termination (method optional)	0	Parts used depend on method chosen
2	Ring Terminal	1	494-00022-xx
3	OAT Sensor		
4	3-Conductor Cable		
5	Nut	1	210-00055-00
6	Washer	1	212-00026-00
7	Backshell	1	125-00085-00
8	Pigtail Wire	0	M22759/16-16
9	Ring Terminal	0	MS25036-152
10	Pan Head Screw	1	211-60234-08
11	Pins, AWG #22	3	336-00021-00
12	Connector	1	330-00366-78

1. Prepare the surface. The metal body of the OAT probe should be grounded to the aircraft. The installation requirements vary depending on the airframe material composition. Refer to the appropriate lightning certification document for zone requirements to determine an acceptable mounting location and bonding method for the OAT probe.

    a. Aluminum airframe: When a mounting location has been found, prepare the inside surface of the aircraft. Remove all paint from the contacting area and clean with a degreaser.

    b. Composite airframe: If possible, mount the OAT probe through a grounded metal strap or band. Otherwise, mount the OAT probe in an area of the airframe that has a significant amount of underlying metal foil or mesh. To ensure adequate conductivity, it may be necessary to mount the OAT probe through a metal doubler. Use fasteners that allow a conductive path to the airframe.

2. Mount the OAT probe on the prepared surface. Place the ring terminal (2) over the end of the OAT probe (4). Insert the probe and ring terminal into the hole in the skin of the aircraft. Place the washer (6) over the end of the OAT probe on the outside skin of the aircraft. Thread the nut (5) onto the OAT probe. Holding the OAT probe on the inside, tighten the nut (5) to 100 inch-lbs. ±20 inch-lbs.

3. Route the OAT probe cable (3) to the GDC 74(X).

4. Cut the OAT Probe cable (3) to the required length. Strip back 2.0” to 3.5” of jacket while retaining the shield on the OAT Probe cable (3). Trim away enough to leave 0.5” of shield exposed.

5. Strip back 1/8” (0.125”) of insulation and crimp pins (11) to each of the conductors in the shielded cable.

6. Cut an AWG #16 (8) wire to 3” long. Strip back 0.5” of insulation from this cable. Connect the shield of the OAT Probe cable (3) to the AWG #16 wire (8).

7. Attach the ring terminal (9) to the backshell, using the screw provided in the OAT Probe Kit (10) and one of the tapped holes on the backshell termination area.

8. Insert newly crimped pins and wires (3, 11) into the appropriate D-Sub connector housing (12) and backshell (7) as specified by the installation wiring diagrams.

9. Verify that all necessary pins for the GDC 74(X) have been attached to the cables and snapped into the proper slots of the 78 pin D-Sub connector.

10. Wrap the cable bundle with Silicone Fusion Tape (GPN: 249-00114-00 or a similar) at the point where the backshell strain relief and cast housing contact the cable bundle. The smooth side of the backshell strain relief should contact the tape.

3.5 Pneumatic Connections

The installer is required to fabricate pneumatic hose connections and attach the aircraft pitot pressure source and aircraft static pressure source to the GDC 74(X).

CAUTION

Check pneumatic connections for errors before operating the GDC 74(X). Incorrect plumbing could cause internal component damage. Observe the following cautions when connecting pneumatic lines.

1. Make sure the aircraft static pressure port is plumbed directly to the unit static pressure input port and the aircraft pitot pressure port is plumbed directly to the unit pitot pressure input port. (See labeling in Figures 2-1, A-1, A-2, A-3, B-1, B-2, B-3, and C-1.
2. Seal the threads of pneumatic fittings at the connector ports. Use caution to ensure there are no pneumatic leaks.
3. Use care to avoid getting fluids or particles anywhere within the pitot and static lines connected to the GDC 74(X).

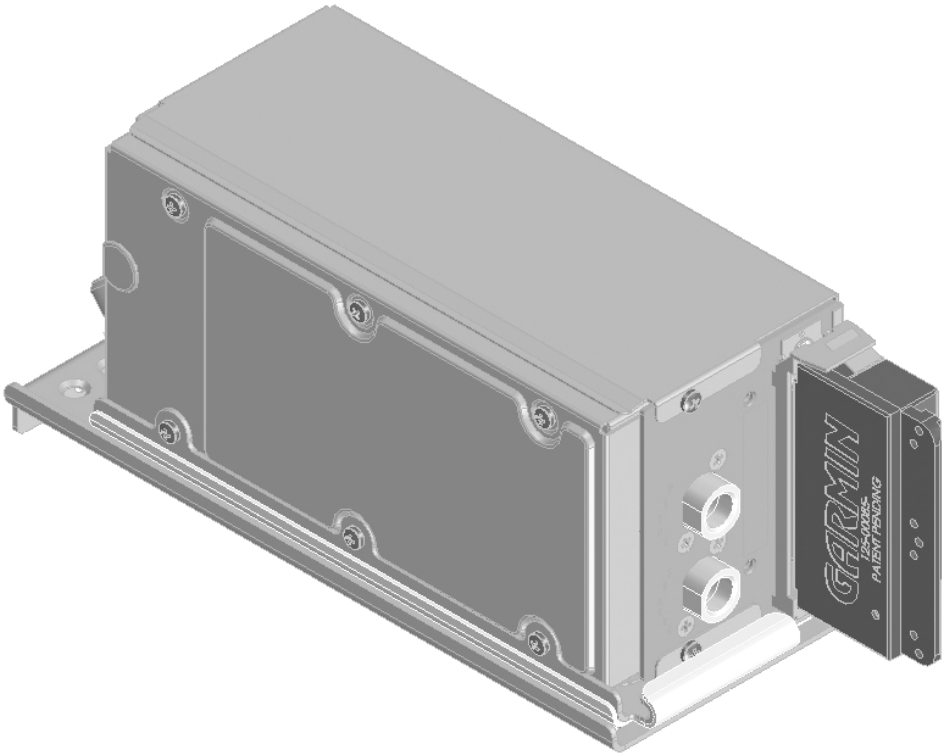

Figure 3-1. GDC 74(X) Unit on Rack, Pneumatic Ports and Connector View

3.6 GDC 74(X) Unit Installation

There are three ways to install the GDC 74A/GDC 74B units, and a single installation method for the GDC 74H units. Refer to the outline and installation drawings shown in Appendix A, B, or C (as appropriate for unit being installed) of this manual.

1. Remote Mounting Option I – Remote mounted rack with connector and fittings opposite the screw down mounting hardware. (Figure A-1 or Figure B-1)
2. Remote Mounting Option II – Remote mounted rack with connector and fittings on the same end as the screw down mounting hardware. (Figure A-2 or Figure B-2)
3. G1000 Rack Mounting – Installation rack (Figure A-3 or Figure B-3)
4. GDC 74H Mounting – Four #8-32 Mounting Screws (Figure C-1)

For remote mounted installations (does not apply to GDC 74H units), attach the remote mounting kit (011-01011-00) to the airframe in a suitable location with suitable mounting hardware (not provided).

For the G1000 rack installation, mount the remote adapter plate (011-01014-00) to the main system rack using the provided nutplate kit (011-00915-00). Then attach the remote mounting rack assembly to the G1000 system rack using six screws provided.

Place the GDC 74(X) into its mounting plate and tighten the mounting screws firmly.

3.7 Post Installation Configuration and Checkout

For actual aircraft installation/checkout, use only aircraft manufacturer approved checkout procedures.

NOTE

The GDC 74(X) will not provide valid outputs until the aircraft post installation calibration procedures are completed.

The GDC 74(X) must be installed with a Garmin G1000 system and have FAA approved configuration data. Configuration data is loaded to the GDC 74(X) from an aircraft-specific G1000 SW Loader Card. GDC 74(X) settings are predetermined for a specific aircraft and are typically contained within the file named 'GDC1'.

3.8 Continued Airworthiness

Per Part 43 Appendix E, paragraph (b)(2), Garmin specifies a test procedure equivalent to Part 43 Appendix E, paragraph (b)(1) with two exceptions. The tests of sub-paragraphs (iv) (Friction) and (vi) (Barometric Scale Error) are not applicable because the digital outputs of the GDC 74(X) are not susceptible to these types of errors.

3.8.1 GDC 74A (011-00882-00, -01, and -10), GDC 74H (011-00882-11), and GDC 74B (011-01110-01) units

Other than periodic testing as required by 14CFR91.411 and in accordance with Section 3.8 herein, maintenance of the GDC 74A, GDC 74H, and GDC 74B units with part number 011-01110-01 is 'on condition' only.

3.8.2 GDC 74B (011-0111-00) units

For units with part number 011-01110-00 installed in aircraft certified for RVSM operation, during the first 24 months after installation the equipment shall not be operated in flight unless an altitude check has been performed within the last 12 months. After 24 months the periodic testing (24 month) as required by 14CFR91.411 and in accordance with Section 3.8 herein shall apply. Otherwise, maintenance of the 011-01110-00 GDC 74B is 'on condition' only. Contact Garmin for help with determining the RVSM error budget and details of the accuracy test.

4 SYSTEM INTERCONNECTS

4.1 Pin Function List, Connector J741

Following the pin assignment table, additional tables group pin connections by function.

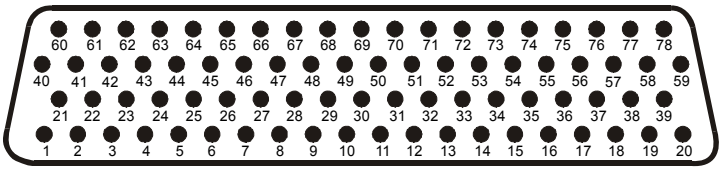

Figure 4-1. Rear Connector J741

Table 4-1. P741 Pin Assignments

Pin	Pin Name	I/O
1	CONFIG MODULE GROUND	--
2	OAT PROBE POWER OUT	Out
3	OAT PROBE IN HI	In
4	OAT PROBE IN LO	In
5	SIGNAL GROUND	--
6	ADC SYSTEM ID PROGRAM* 1	In
7	SIGNAL GROUND	--
8	DISCRETE IN* 6	In
9	SIGNAL GROUND	--
10	RS-232 IN 1	In
11	RS-232 OUT 1	Out
12	SIGNAL GROUND	--
13	RS-232 IN 2	In
14	RS-232 OUT 2	Out
15	SIGNAL GROUND	--
16	RESERVED	--
17	POWER GROUND	--
18	POWER GROUND	--
19	POWER GROUND	--
20	POWER GROUND	--
21	CONFIG MODULE POWER OUT	Out
22	SPARE	--
23	ARINC 429 IN 1 A	In
24	ARINC 429 IN 1 B	In
25	SIGNAL GROUND	--
26	ARINC 429 OUT 1 A	Out

An asterisk (*) following a signal name denotes that the signal is an Active Low, requiring a ground to activate.

Table 4-1. P741 Pin Assignments (Continued)

Pin	Pin Name	I/O
27	ARINC 429 OUT 1 B	Out
28	SIGNAL GROUND	--
29	ARINC 429 OUT 2 A	Out
30	ARINC 429 OUT 2 B	Out
31	SIGNAL GROUND	--
32	ARINC 429 OUT 3 A	Out
33	ARINC 429 OUT 3 B	Out
34	SIGNAL GROUND	--
35	ARINC 429 IN 2 A	In
36	ARINC 429 IN 2 B	In
37	SIGNAL GROUND	--
38	SPARE	--
39	SPARE	--
40	CONFIG MODULE DATA	I/O
41	ARINC 429 OUT 1 A	Out
42	ARINC 429 OUT 1 B	Out
43	SIGNAL GROUND	--
44	ARINC 429 OUT 2 A	Out
45	ARINC 429 OUT 2 B	Out
46	SIGNAL GROUND	--
47	ARINC 429 OUT 3 A	Out
48	ARINC 429 OUT 3 B	Out
49	SIGNAL GROUND	--
50	DISCRETE IN 7	In
51	SIGNAL GROUND	--
52	DISCRETE IN 8	In
53	SIGNAL GROUND	--
54	SPARE	--
55	AIRCRAFT POWER 1	In
56	SPARE	--
57	SPARE	--
58	AIRCRAFT POWER 2	In
59	SPARE	--
60	CONFIG MODULE CLOCK	Out
61	DISCRETE IN* 1	In
62	SIGNAL GROUND	--
63	DISCRETE IN* 2	In
64	SIGNAL GROUND	--
65	DISCRETE IN* 3	In

An asterisk (*) following a signal name denotes that the signal is an Active Low, requiring a ground to activate.

Table 4-1. P741 Pin Assignments (Continued)

Pin	Pin Name	I/O
66	SIGNAL GROUND	--
67	DISCRETE IN* 4	In
68	SIGNAL GROUND	--
69	DISCRETE IN* 5	In
70	SIGNAL GROUND	--
71	ADC SYSTEM ID PROGRAM* 2	In
72	SIGNAL GROUND	--
73	ARINC 429 IN 3 A	In
74	ARINC 429 IN 3 B	In
75	SIGNAL GROUND	--
76	ARINC 429 IN 4 A	In
77	ARINC 429 IN 4 B	In
78	SIGNAL GROUND	--

An asterisk (*) following a signal name denotes that the signal is an Active Low, requiring a ground to activate.

4.2 Power Function

Power Input requirements are listed in the following table. The power-input pins accept 10-33 Vdc. AIRCRAFT POWER 2 is for connecting to an alternate power source, such as on aircraft with two electrical buses. Refer to Figure E -1 for power connections.

Table 4-2. Aircraft Power Pin Assignments, P741

Pin	Pin Name	Description	I/O
55	AIRCRAFT POWER 1	Unit Power	In
58	AIRCRAFT POWER 2	Unit Power	In
2	OAT PROBE POWER OUT	Provides Power to Oat Probe	Out
17	POWER GROUND	Aircraft Ground	--
18	POWER GROUND	Aircraft Ground	--
19	POWER GROUND	Aircraft Ground	--
20	POWER GROUND	Aircraft Ground	--
21	CONFIG MODULE POWER OUT	+3.3 Vdc Power for Configuration Module	Out

AIRCRAFT POWER 1 (Pin 55) and AIRCRAFT POWER 2 (Pin 58) are internally “diode ORed” to provide power redundancy.

4.3 Serial Data Electrical Characteristics

4.3.1 RS-232 Input/Output

Table 4-3. RS-232 Pin Assignments, P741

Pin	Pin Name	Description	I/O
10	RS-232 IN1	Data In	In
11	RS-232 OUT 1	Data Out	Out
13	RS-232 IN 2	Data In	In
14	RS-232 OUT 2	Data Out	Out
12	SIGNAL GROUND	Signal Ground for RS-232 1	--
15	SIGNAL GROUND	Signal Ground for RS-232 2	--

The RS-232 outputs conform to EIA/TIA-232C with an output voltage swing of at least ±5 V when driving a standard RS-232 load. Refer to Figure E -1 for the RS-232 serial data interconnections.

4.3.2 ARINC 429 Input/Output

Table 4-4. ARINC 429 Pin Assignments, P741

Pin	Pin Name	Description	I/O
26,41	ARINC 429 OUT 1 A	ARINC 429 Transmitter	Out
27,42	ARINC 429 OUT 1 B	ARINC 429 Transmitter	Out
28	SIGNAL GROUND		--
43	SIGNAL GROUND		--
29,44	ARINC 429 OUT 2 A	ARINC 429 Transmitter	Out
30,45	ARINC 429 OUT 2 B	ARINC 429 Transmitter	Out
31	SIGNAL GROUND		--
46	SIGNAL GROUND		--
32,47	ARINC 429 OUT 3 A	ARINC 429 Transmitter	Out
33,48	ARINC 429 OUT 3 B	ARINC 429 Transmitter	Out
34	SIGNAL GROUND		--
49	SIGNAL GROUND		--
23	ARINC 429 IN 1 A	ARINC 429 Receiver	In
24	ARINC 429 IN 1 B	ARINC 429 Receiver	In
25	SIGNAL GROUND		--
35	ARINC 429 IN 2 A	ARINC 429 Receiver	In
36	ARINC 429 IN 2 B	ARINC 429 Receiver	In
37	SIGNAL GROUND		
73	ARINC 429 IN 3 A	ARINC 429 Receiver	In
74	ARINC 429 IN 3 B	ARINC 429 Receiver	In
75	SIGNAL GROUND		--
76	ARINC 429 IN 4 A	ARINC 429 Receiver	In
77	ARINC 429 IN 4 B	ARINC 429 Receiver	In
78	SIGNAL GROUND		--

The ARINC 429 transmitters currently operate at low speed. The receivers are capable of accepting either high-speed or low-speed data. Unless high-speed transmission is necessary, low-speed transmission is preferred.

4.4 Temperature Inputs

Temperature input is used for Outside Air Temperature (OAT) computations. The temperature input is a three-wire temperature probe interface. OAT Power Out and OAT High are connected internally at the OAT probe. A GTP 59 or other supported temperature probe is required for the GDC 74(X) ADC (Air Data Computer) installation. The GTP 59 is a Resistive Temperature Device (RTD). Refer to Figure E -1 for the temperature probe interconnect.

Table 4-5. Temperature Probe Pin Assignments P741

Pin	Pin Name	Description	I/O
2	OAT PROBE POWER OUT	Probe Power Lead	Out
3	OAT PROBE IN HI	Resistive Element HI	In
4	OAT PROBE IN LO	Resistive Element LO	In

4.5 Discrete Signal Input

Table 4-6. Discrete Signal Input, P741

Pin	Pin Name	Description	I/O
61	DISCRETE IN* 1	Active Low Discrete Input	In
63	DISCRETE IN* 2	Active Low Discrete Input	In
65	DISCRETE IN* 3	Active Low Discrete Input	In
67	DISCRETE IN* 4	Active Low Discrete Input	In
69	DISCRETE IN* 5	Active Low Discrete Input	In
8	DISCRETE IN* 6	Active Low Discrete Input	In
50	DISCRETE IN 7	Active High Discrete Input	In
52	DISCRETE IN 8	Active High Discrete Input	In

DISCRETE IN* pins:
INACTIVE: $10 \leq Vin \leq 33VDC$ or $Rin \geq 100k\Omega$
ACTIVE: $Vin \leq 1.9VDC$ with ≥ 75 uA sink current, or $Rin \leq 375\Omega$
Sink current is internally limited to 200 uA max for a grounded input

DISCRETE IN pins:
INACTIVE: $Vin \leq 3.5VDC$
ACTIVE: $10 \leq Vin \leq 33VDC$ with ≥ 75 uA source current
Source current is internally limited to 1.5 mA max for a 10-33VDC input

4.6 Configuration Module Connections

The configuration module, mounted in the unit connector backshell, contains an EEPROM.

Table 4-7. Configuration Module Connections, P741

Pin	Pin Name	Description	I/O
1	CONFIG MODULE GROUND	Ground for the Configuration Module	--
40	CONFIG MODULE DATA	Serial Data In/Out	I/O
21	CONFIG MODULE POWER OUT	+3.3 Vdc Power for Configuration Module	Out
60	CONFIG MODULE CLOCK	Serial Clock Output	Out

4.7 ADC ARINC 429 System ID Connections

The GDC 74(X) has an associated Source/Destination Identifier (SDI or System ID) that is coded into its ARINC 429 output messages/labels. The System ID may be used to uniquely distinguish the source of the GDC 74(X) ARINC 429 labels in a system with more than one GDC 74(X). The GDC 74(X) System ID can be set to All Call, #1, #2, or #3 for such purposes. Table 4-8 identifies which pins on connector P741 are used to select the desired System ID.

Table 4-8. ADC System ID Program Pins, P741

Pin	Pin Name	Description	I/O
6	ADC SYSTEM ID PROGRAM* 1	Active Low Discrete Input	In
71	ADC SYSTEM ID PROGRAM* 2	Active Low Discrete Input	In

An asterisk (*) following a signal name denotes that the signal is an Active Low, see paragraph 4.5 for specifications.

4.8 ADC System ID Strapping

By hard strapping the program pins listed in Table 4-8 to ground or open, the GDC 74(X) ADC (Air Data Computer) is assigned a System ID. The System ID is included in each transmitted ARINC 429 word. The System ID indicates that there is only a single ADC installed (All Call) or, if multiple units are installed, which ADC the data originates from (#1, #2 or #3). When a single GDC 74(X) is installed in the system, then the pins are left open (All Call). Table 4-9 shows strapping connections to achieve the desired system ID.

Table 4-9. P741 Strapping to Achieve Desired System ID

System ID Number	ARINC System ID 1 Pin 6	ARINC System ID 2 Pin 71
All Call	Open	Open
#1	Ground	Open
#2	Open	Ground
#3	Ground	Ground

This page intentionally left blank

GDC74A (011-00882-00 & 011-00882-01) OUTLINE DRAWING
FOR REMOTE MOUNTING OPTION I:
(CONNECTOR AND FITTINGS ARE OPPOSITE
THE SCREW DOWN MOUNTING HARDWARE)

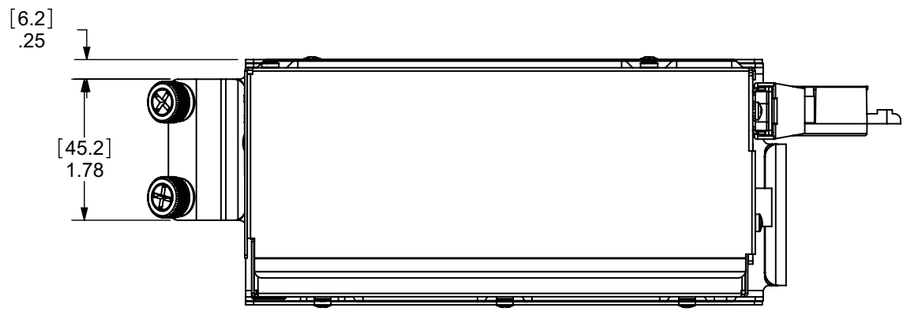

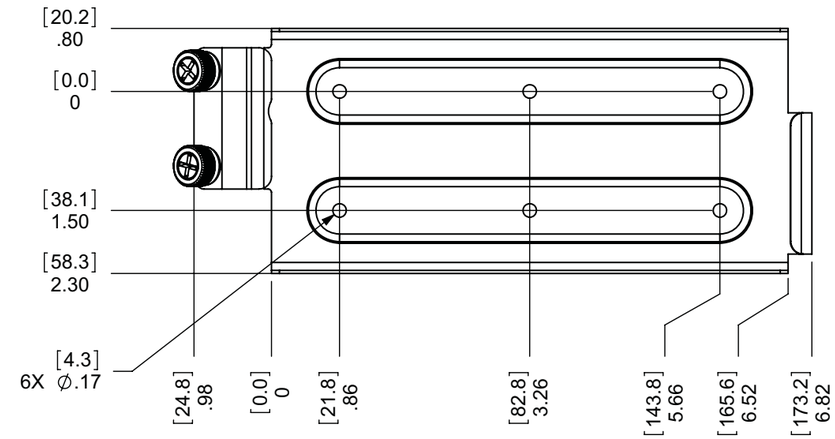

GDC74(X) REMOTE MOUNT PLATE
TOP VIEW SHOWING MOUNTING HOLES

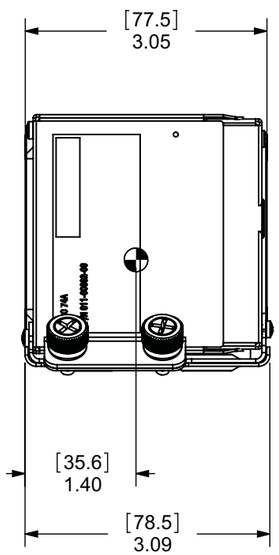

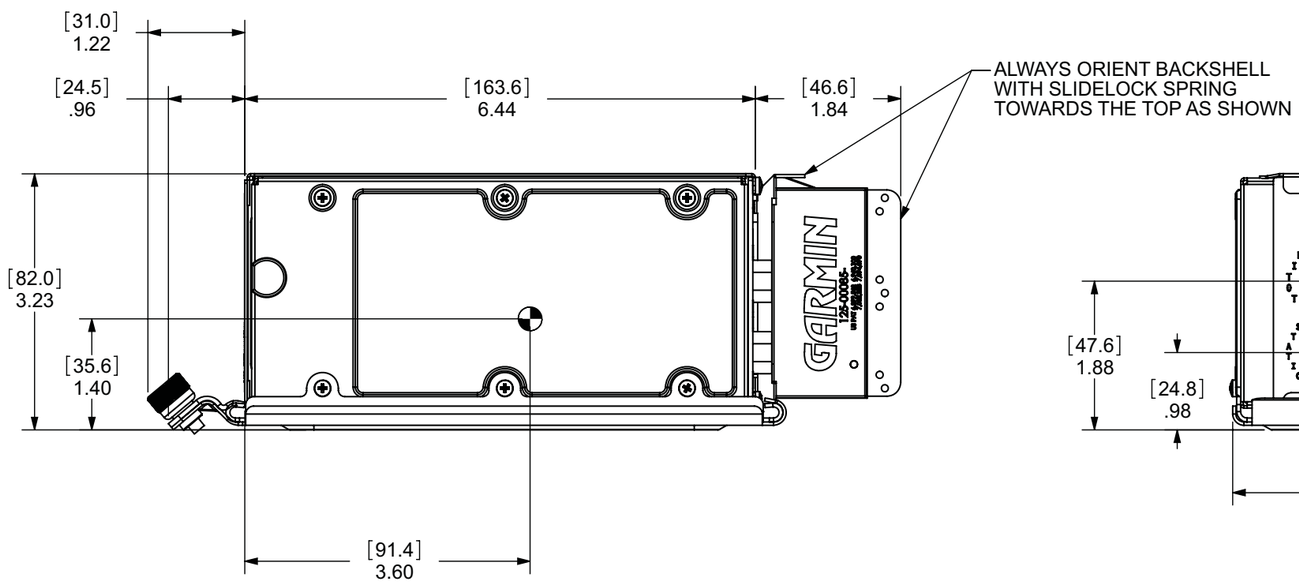

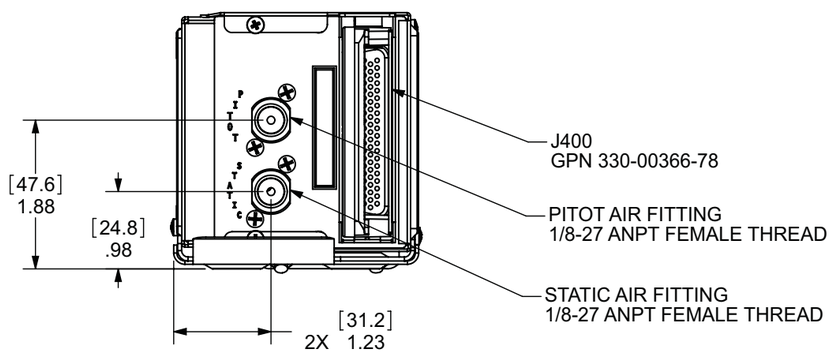

Dimensions: INCHES[mm]

Figure A-1. GDC 74A (011-00882-00 and 011-00882-01 only) Outline Drawing for Remote Mounting Option I (Sheet 1 of 2)

GDC74A (011-00882-00 & 011-00882-01) EXPLODED VIEW
FOR REMOTE MOUNTING OPTION I:
(CONNECTOR AND FITTINGS ARE OPPOSITE
THE SCREW DOWN MOUNTING HARDWARE)

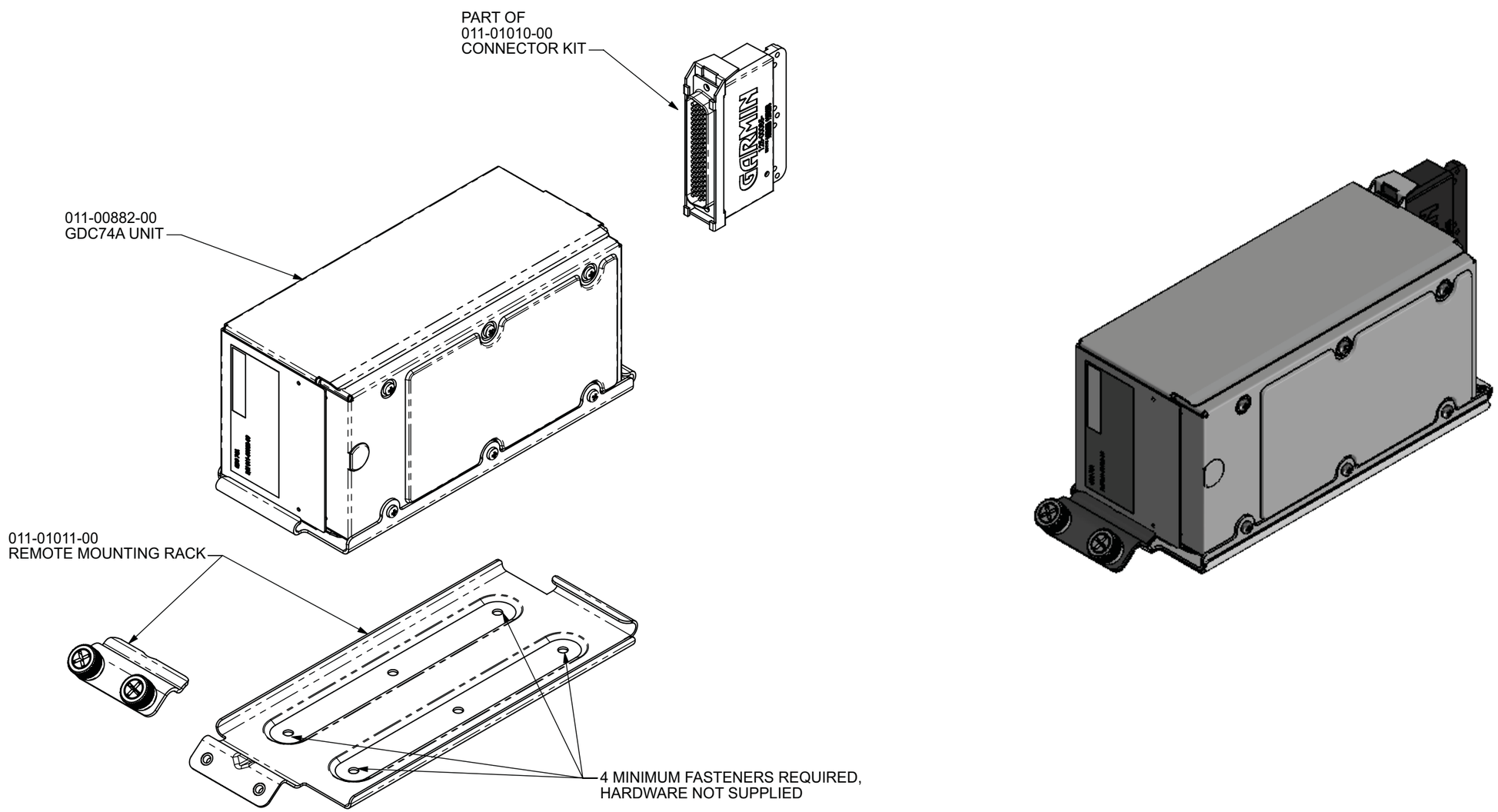

Figure A-1. GDC 74A (011-00882-00 and 011-00882-01 only) Outline Drawing for Remote Mounting Option I (Sheet 2 of 2)

GDC74A (011-00882-00 & 011-00882-01) OUTLINE DRAWING
FOR REMOTE MOUNTING OPTION II:
(CONNECTOR AND FITTINGS ARE ON SAME END
AS THE SCREW DOWN MOUNTING HARDWARE)

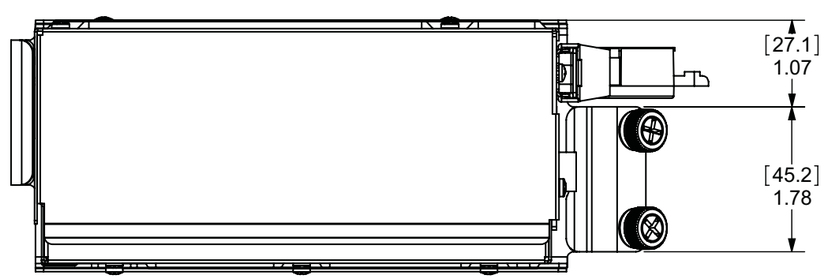

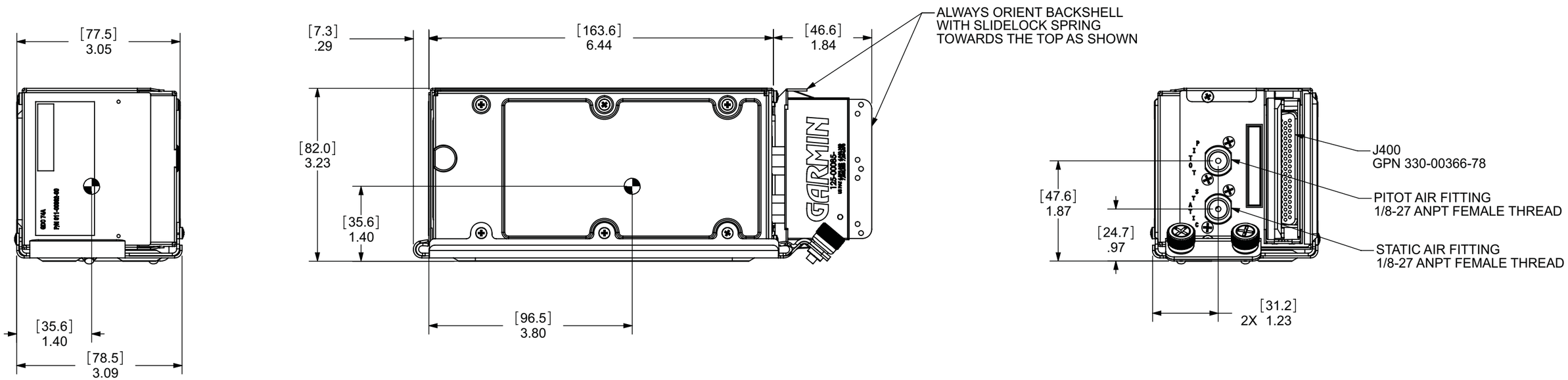

Dimensions: INCHES[mm]

Figure A-2. GDC 74A (011-00882-00 and 011-00882-01 only) Outline Drawing for Remote Mounting Option II (Sheet 1 of 2)

GDC74A (011-00882-00 & 011-00882-01) EXPLODED VIEW
FOR REMOTE MOUNTING OPTION II:
(CONNECTOR AND FITTINGS ARE ON SAME END
AS THE SCREW DOWN MOUNTING HARDWARE)

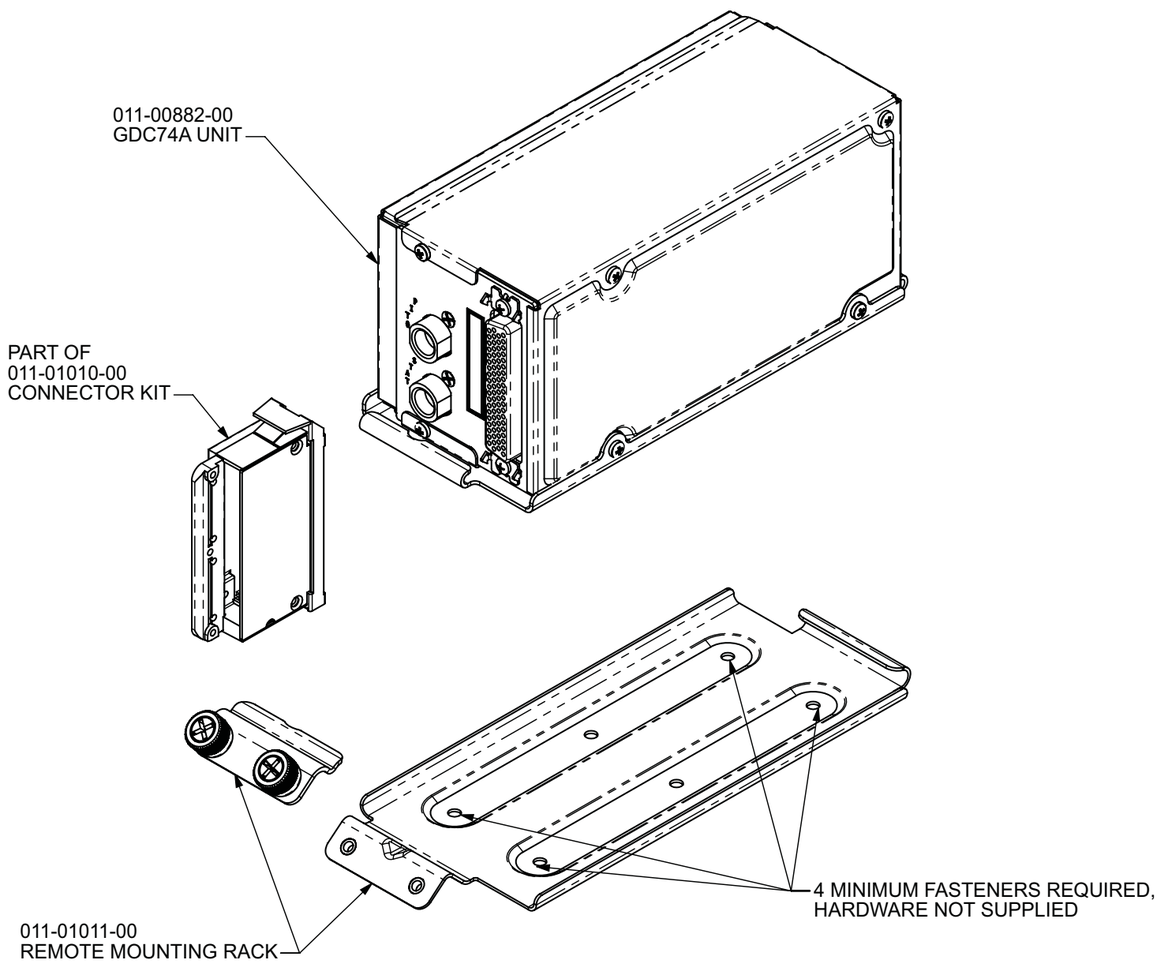

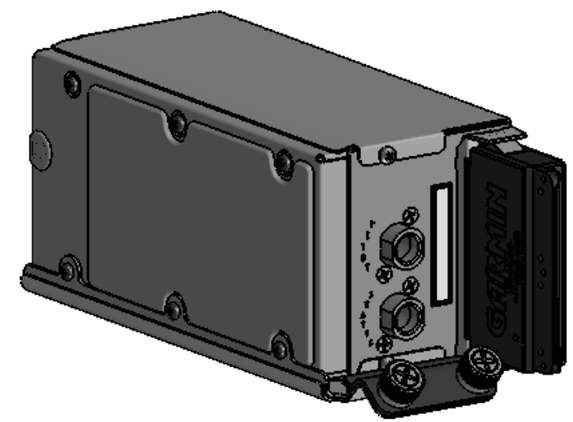

Figure A-2. GDC 74A (011-00882-00 and 011-00882-01 only) Outline Drawing for Remote Mounting Option II (Sheet 2 of 2)

GDC74A (011-00882-00 & 011-00882-01) OUTLINE DRAWING
FOR G1000 RACK MOUNTING OPTION III:
(CONNECTOR AND FITTINGS ARE OPPOSITE
THE SCREW DOWN MOUNTING HARDWARE)

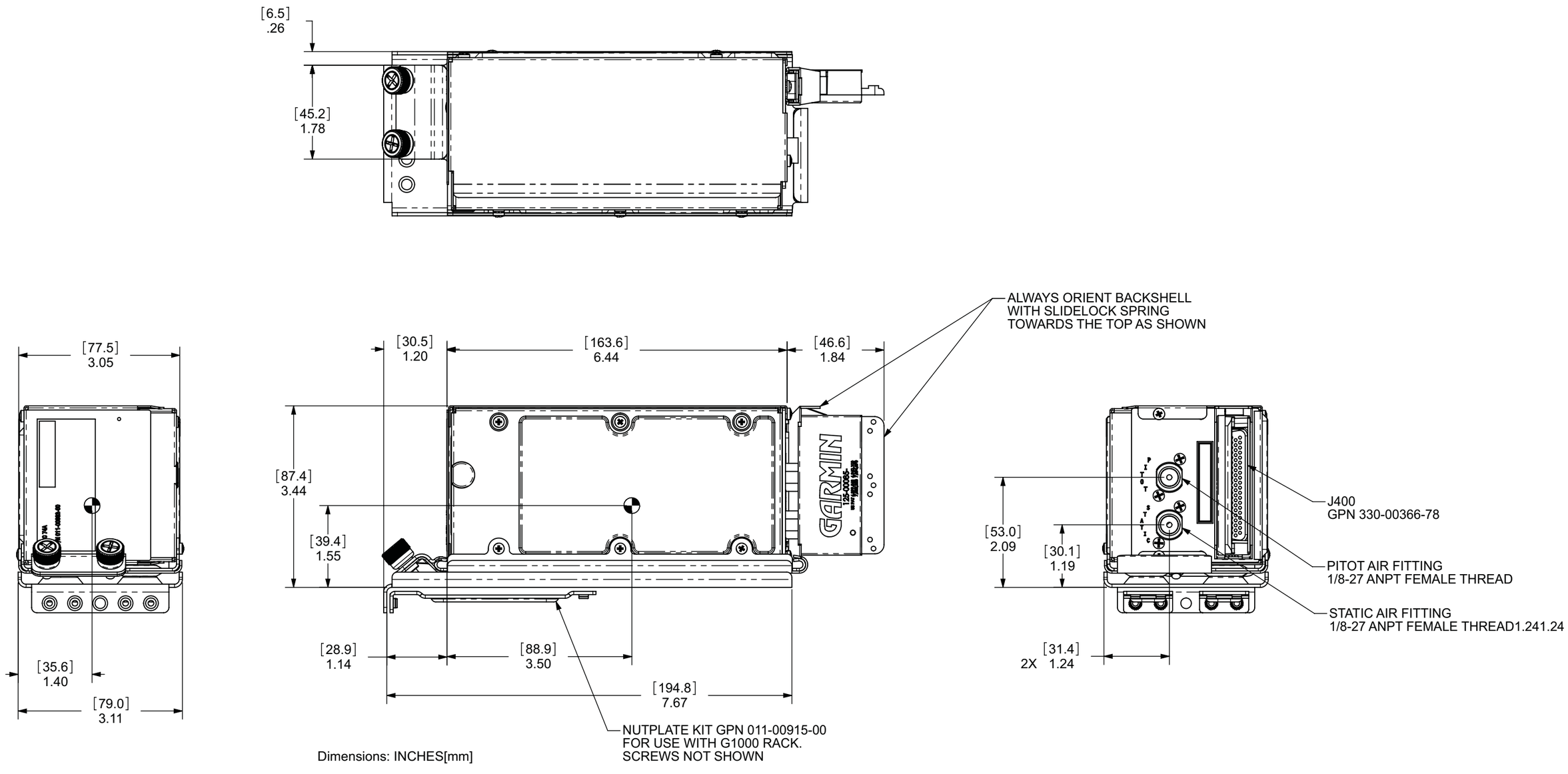

Figure A-3. GDC 74A (011-00882-00 and 011-00882-01 only) Outline Drawing for G1000 Rack Mounting (Sheet 1 of 2)

GDC74A (011-00882-00 & 011-00882-01) EXPLODED VIEW
FOR G1000 RACK MOUNTING OPTION III:
(CONNECTOR AND FITTINGS ARE OPPOSITE
THE SCREW DOWN MOUNTING HARDWARE)

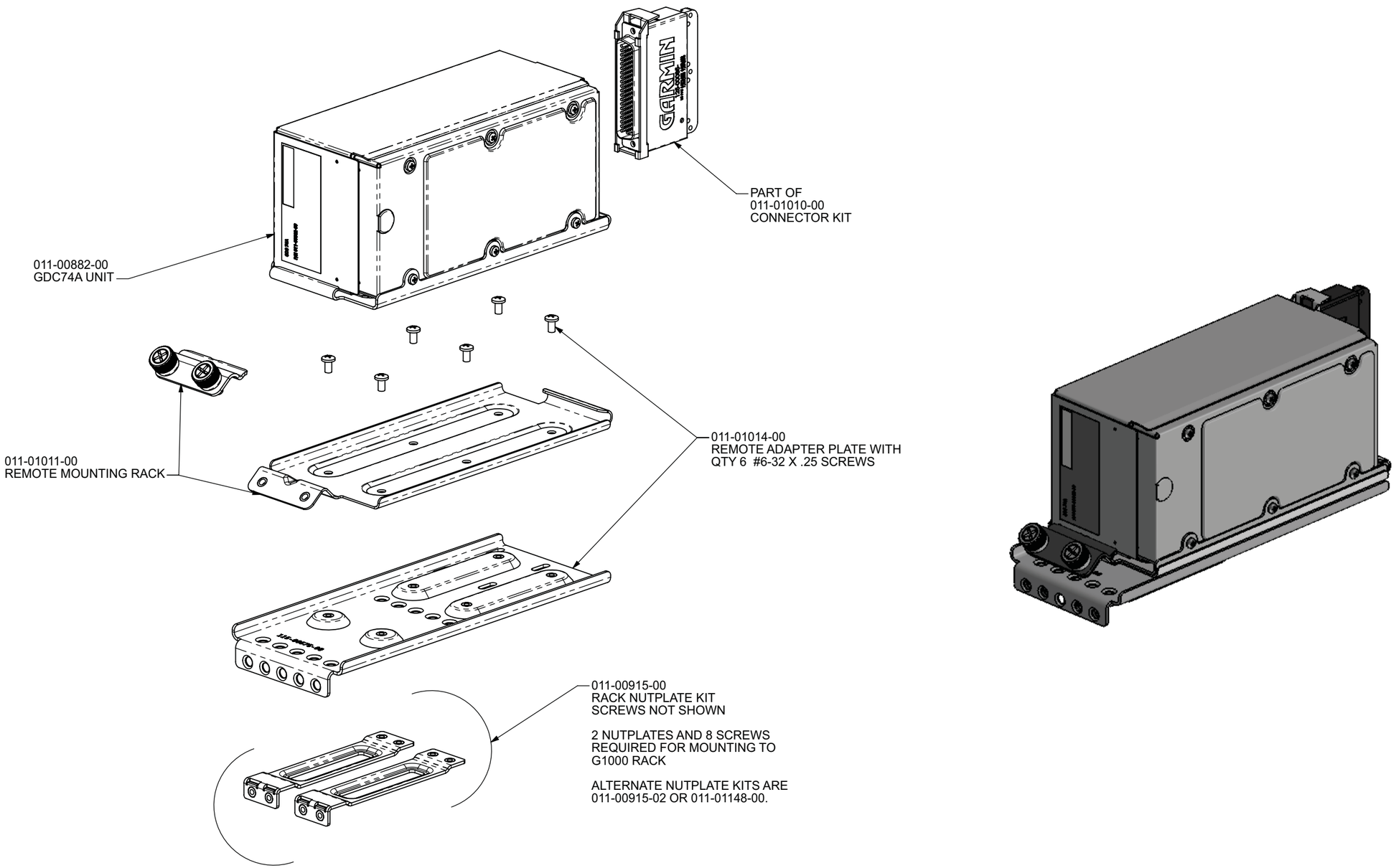

Figure A-3. GDC 74A (011-00882-00 and 011-00882-01 only) Outline Drawing for G1000 Rack Mounting (Sheet 2 of 2)

GDC74A (011-00882-00 & 011-00882-01) MOUNTING ORIENTATION

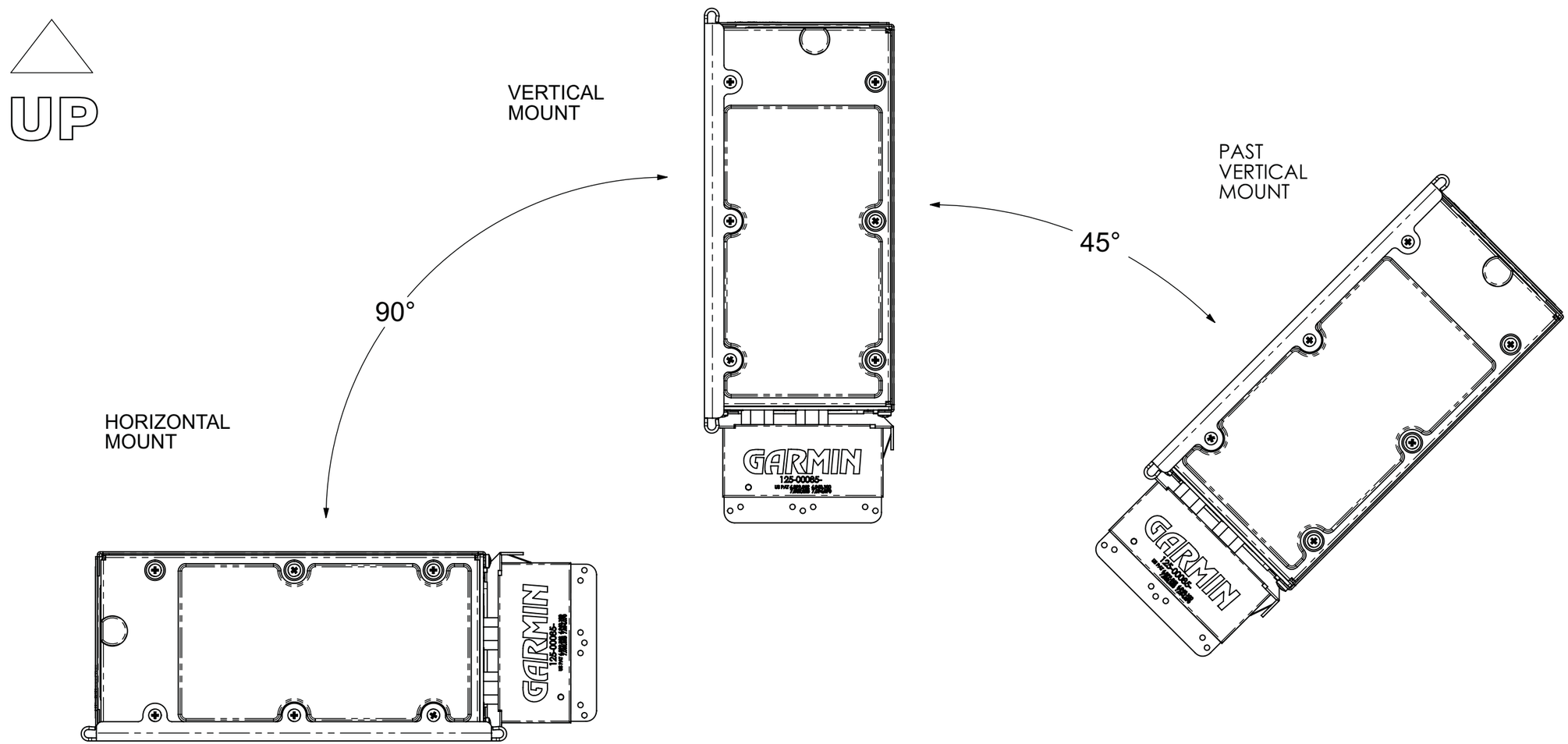

NOTES:
1. ORIENTATION MUST BE LIMITED TO RANGE SHOWN TO AVOID FLUID ACCUMULATION INSIDE UNIT.

UNIT MAY BE ORIENTED AS SHOWN IN ANY POSITION FROM HORIZONTAL TO 45 DEGREES PAST VERTICAL.

Figure A-4. GDC 74A (011-00882-00 and 011-00882-01 only) Mounting Orientation (Sheet 1 of 2)

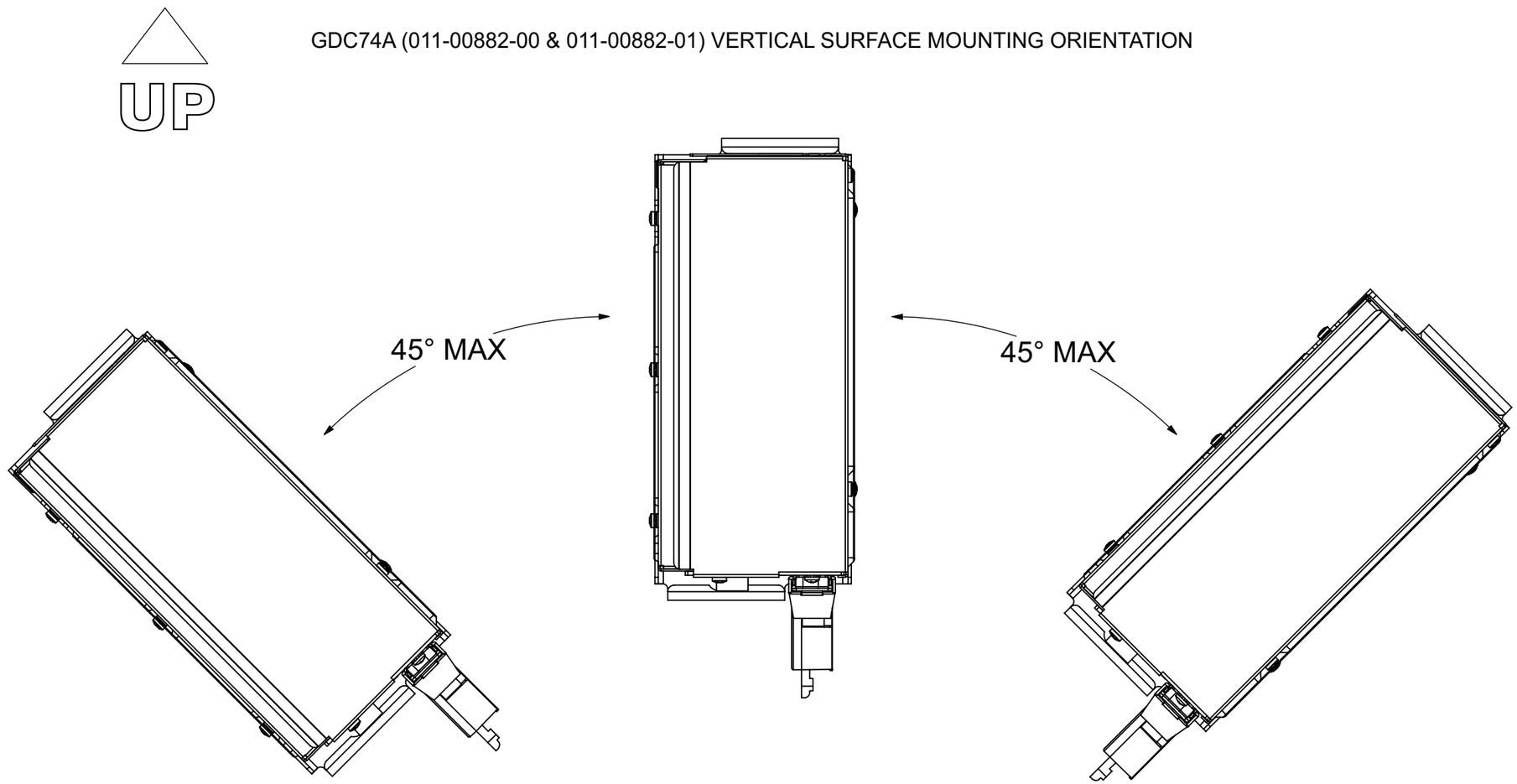

NOTES:
1. ORIENTATION MUST BE LIMITED TO RANGE SHOWN TO AVOID FLUID ACCUMULATION INSIDE UNIT.

UNIT MAY BE ORIENTED ON VERTICAL SURFACE AS SHOWN. MOUNTING ORIENTATION MUST BE WITHIN 45 DEGREES OF VERTICAL.

Figure A-4. GDC 74A (011-00882-00 and 011-00882-01 only) Mounting Orientation (Sheet 2 of 2)

GDC74B (011-01110-0X) AND GDC74A (011-00882-10)
OUTLINE DRAWING FOR REMOTE MOUNTING OPTION I:
(CONNECTOR AND FITTINGS ARE OPPOSITE
THE SCREW DOWN MOUNTING HARDWARE.

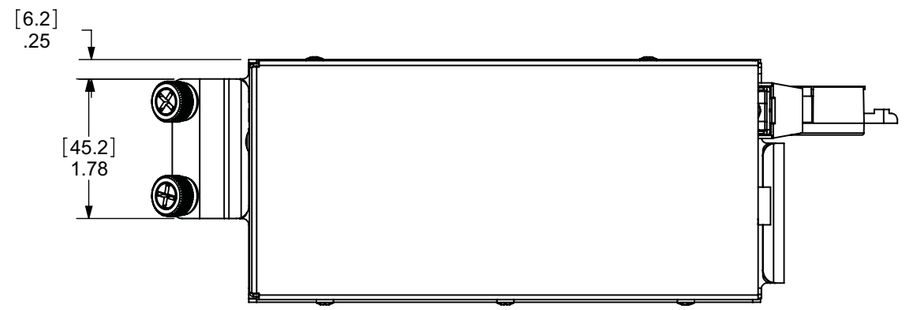

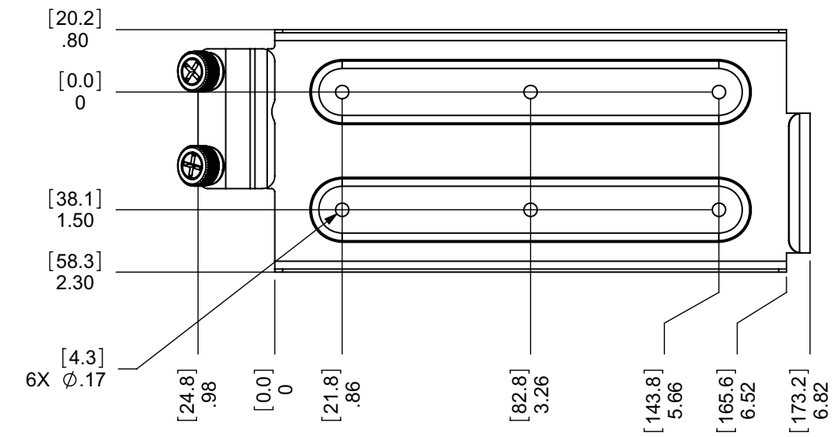

GDC74X REMOTE MOUNT PLATE
TOP VIEW SHOWING MOUNTING HOLES

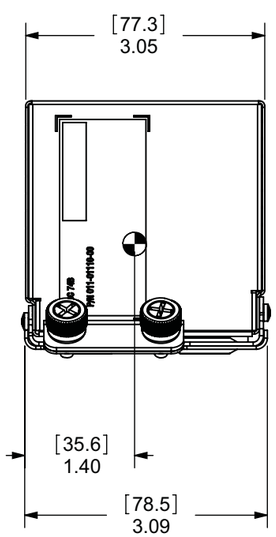

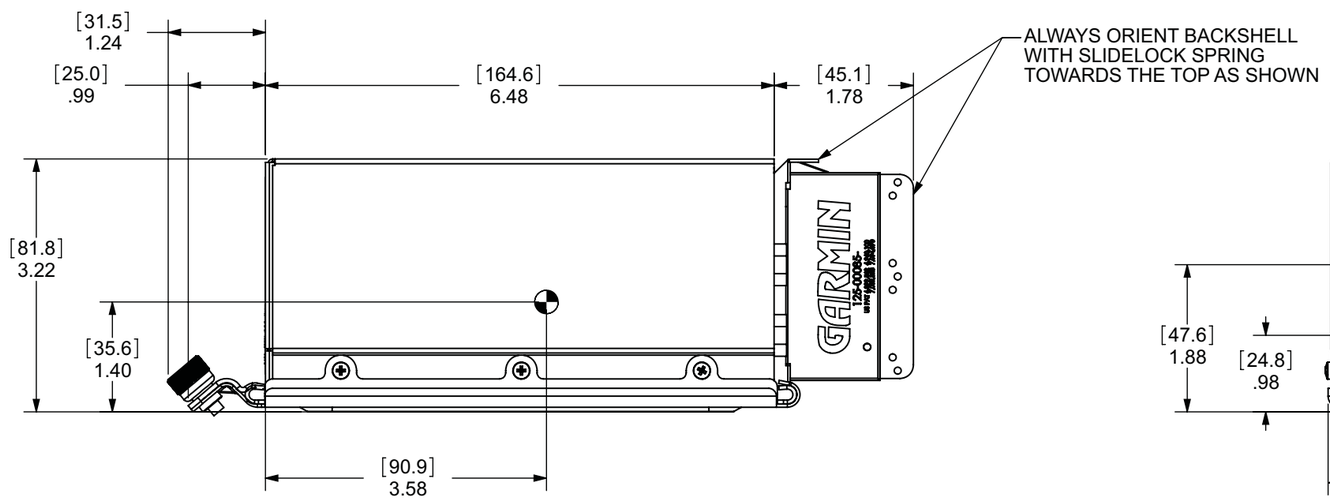

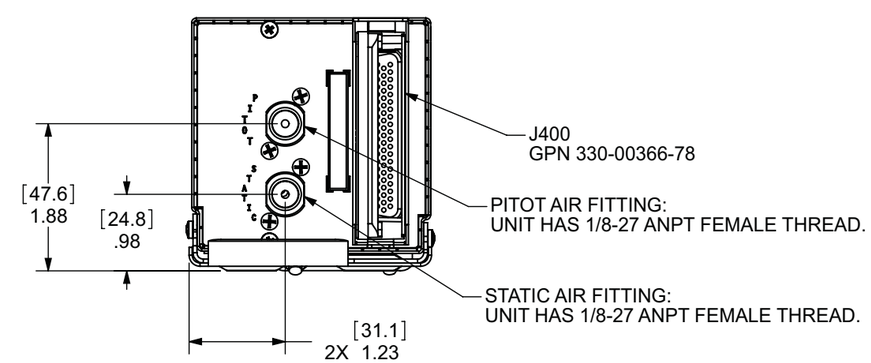

Dimensions: INCHES[mm]

Figure B-1. GDC 74B (011-01110-0X) and GDC 74A (011-00820-10 only) Outline Drawing for Remote Mounting Option I (Sheet 1 of 2)

GDC74B (011-01110-0X) AND GDC74A (011-00882-10)
EXPLODED VIEW FOR REMOTE MOUNTING OPTION I:
(CONNECTOR AND FITTINGS ARE OPPOSITE
THE SCREW DOWN MOUNTING HARDWARE)

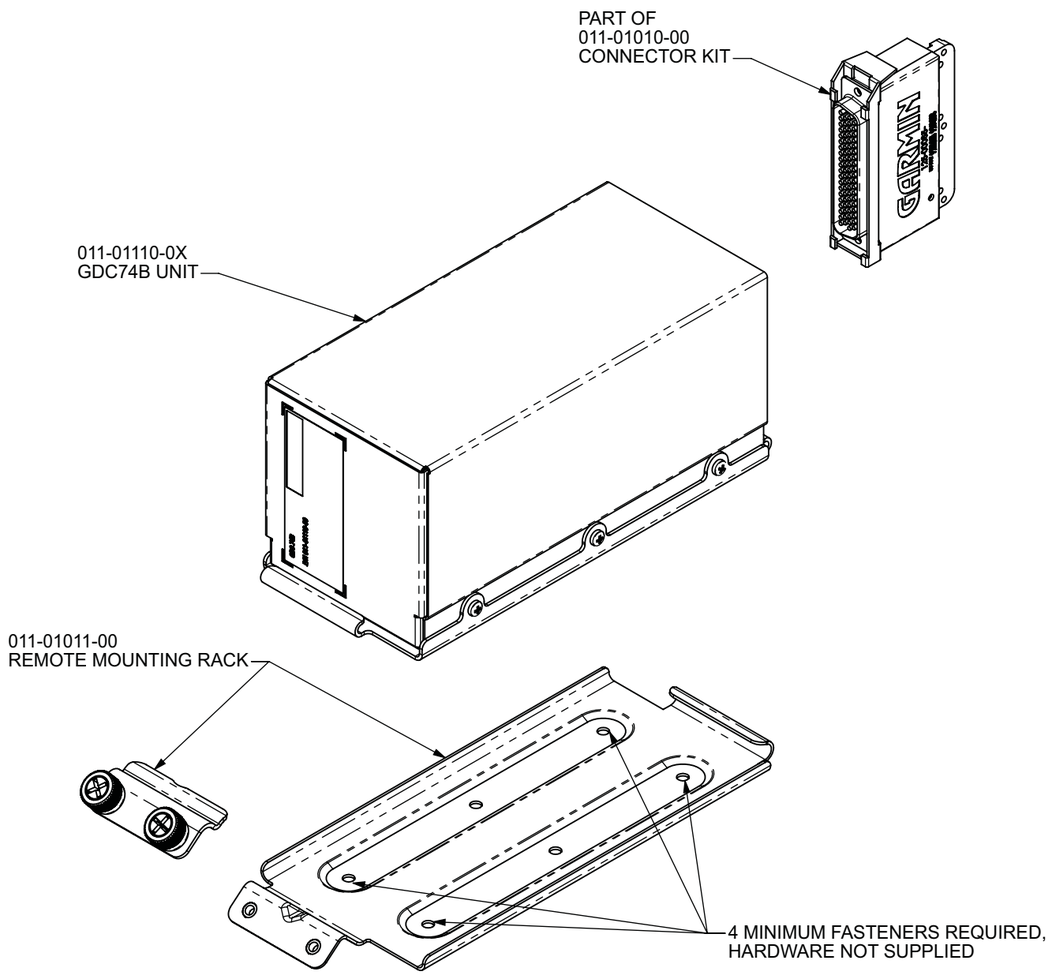

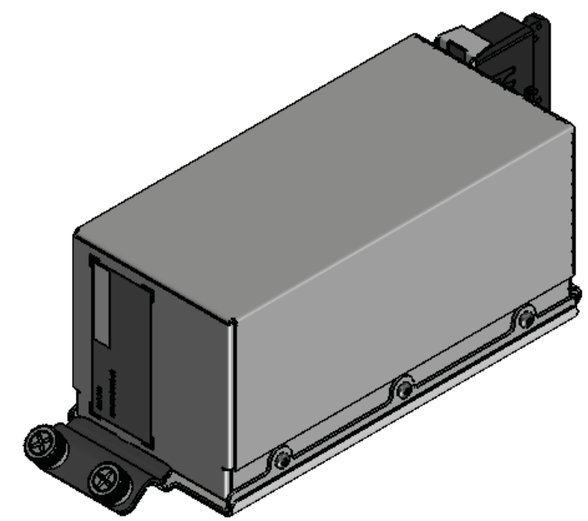

Figure B-1. GDC 74B (011-01110-0X) and GDC 74A (011-00882-10 only) Outline Drawing for Remote Mounting Option I (Sheet 2 of 2)

GDC74B (011-01110-0X) AND GDC74A (011-00882-10)
OUTLINE DRAWING FOR REMOTE MOUNT OPTION II:
(CONNECTOR AND FITTINGS ARE ON SAME END
AS THE SCREW DOWN MOUNTING HARDWARE)

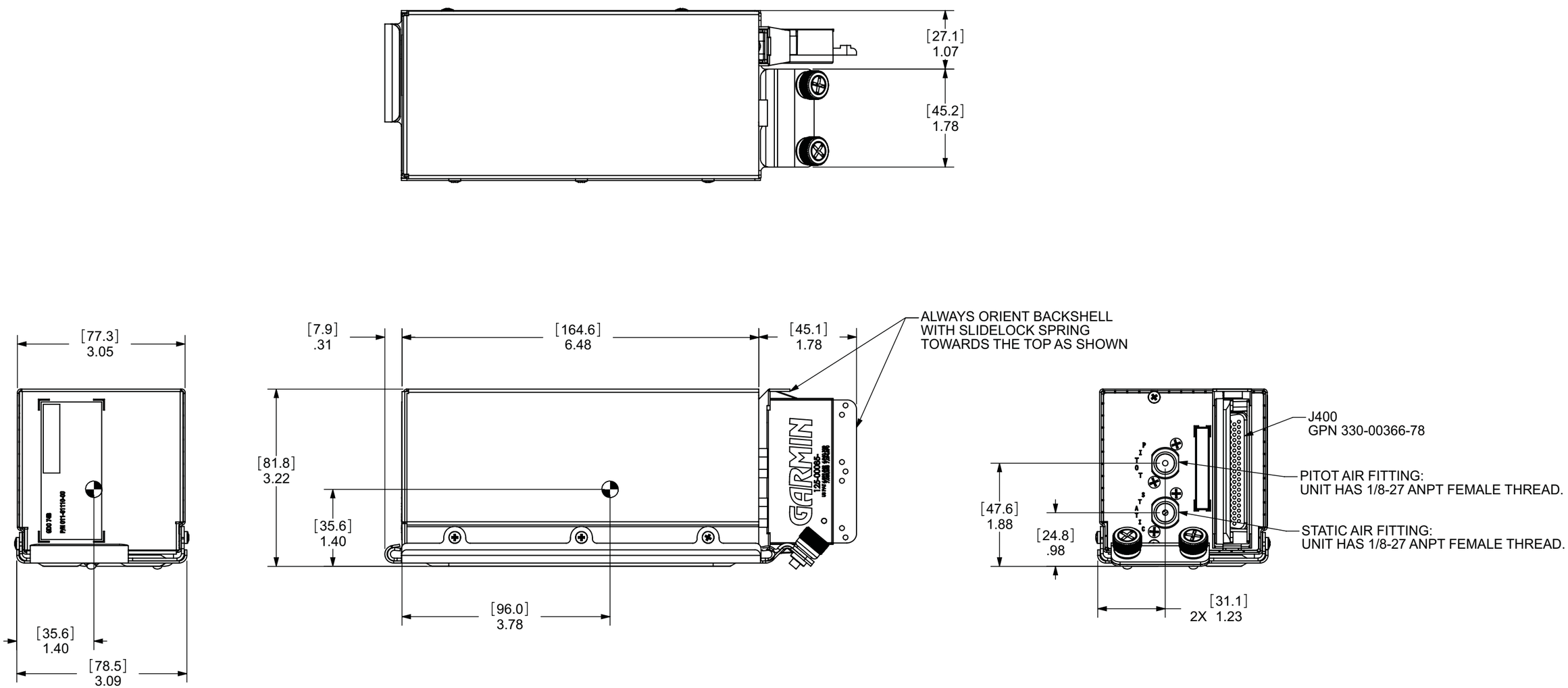

Figure B-2. GDC 74B (011-01110-0X) and GDC 74A (011-00882-10 only) Outline Drawing for Remote Mounting Option II (Sheet 1 of 2)

GDC74B (011-01110-0X) AND GDC74A (011-00882-10)
EXPLODED VIEW FOR REMOTE MOUNT OPTION II:
(CONNECTOR AND FITTINGS ARE ON SAME END
AS THE SCREW DOWN MOUNTING HARDWARE)

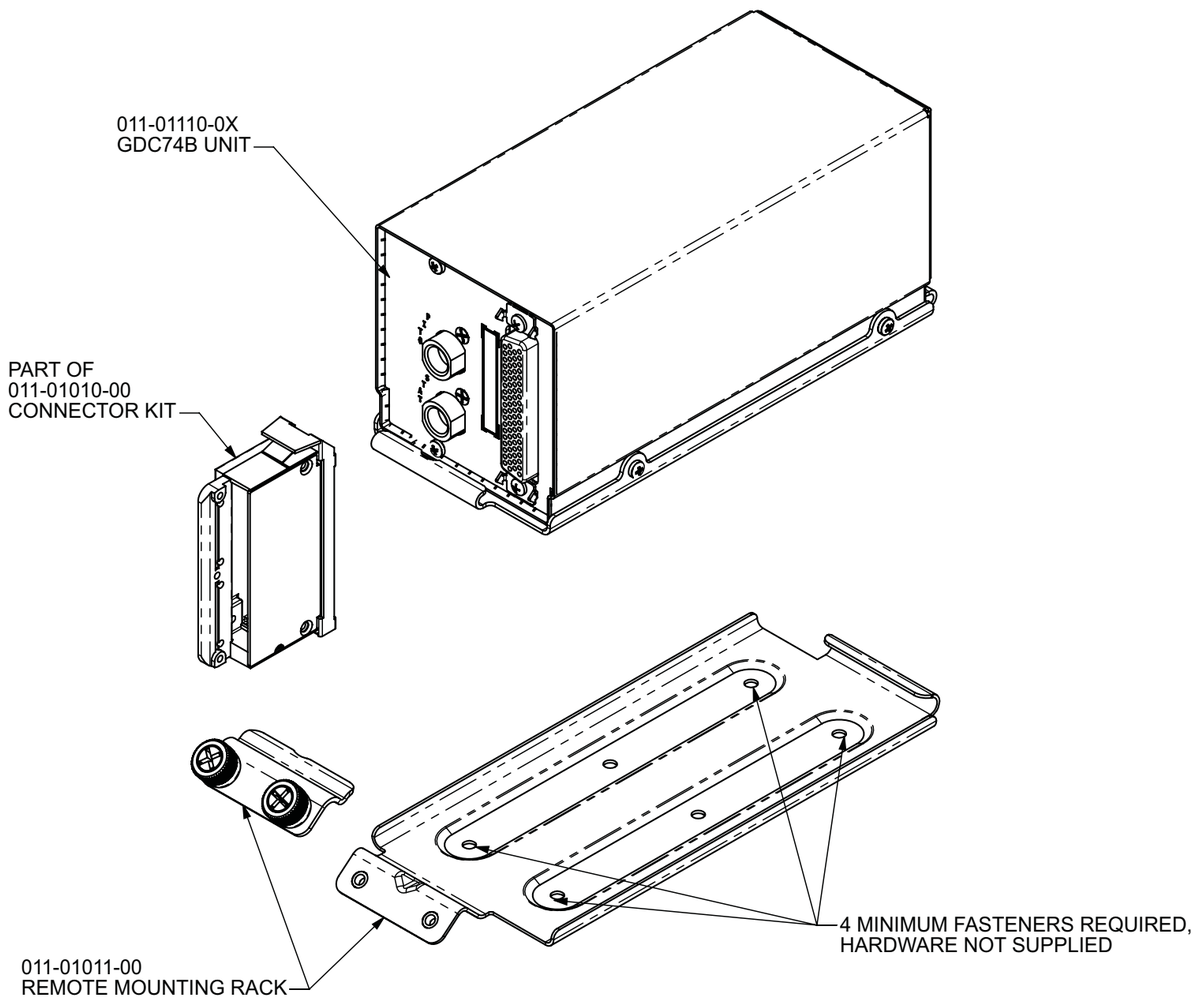

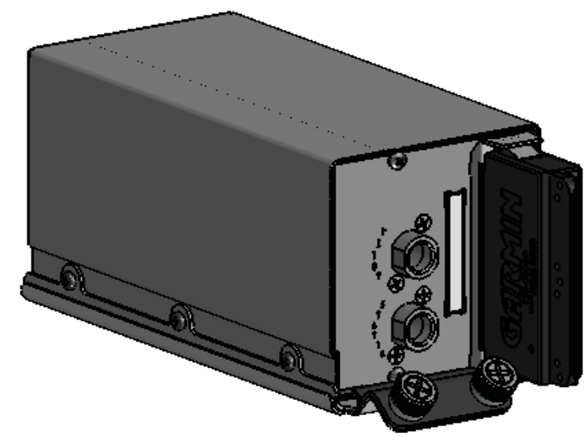

Figure B-2. GDC 74B (011-01110-0X) and GDC 74A (011-00882-10 only) Outline Drawing for Remote Mounting Option II (Sheet 2 of 2)

GDC74B (011-01110-0X) AND GDC74A (011-00882-10)
OUTLINE DRAWING FOR G1000 RACK MOUNTING OPTION III:
(CONNECTOR AND FITTINGS ARE OPPOSITE
THE SCREW DOWN MOUNTING HARDWARE)

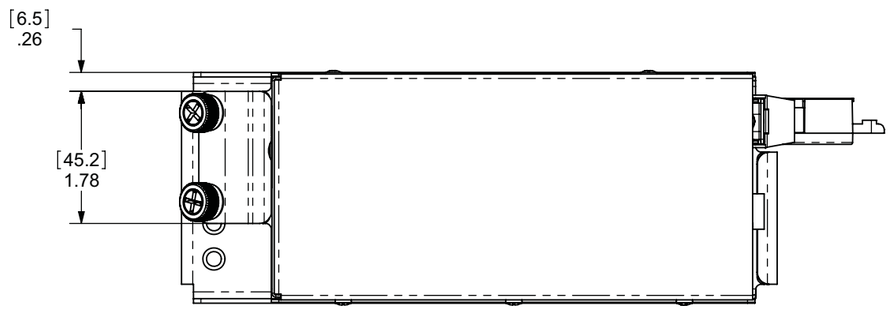

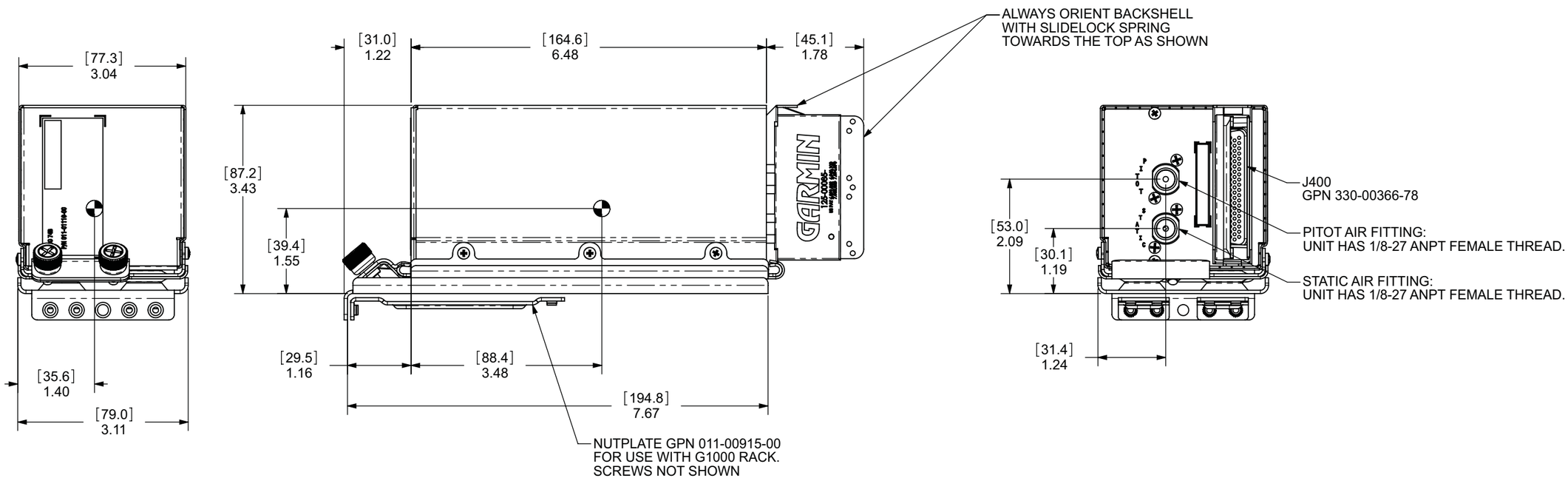

Figure B-3. GDC 74B (011-01110-0X) and GDC 74A (011-00882-10 only) Outline Drawing for G1000 Rack Mounting (Sheet 1 of 2)

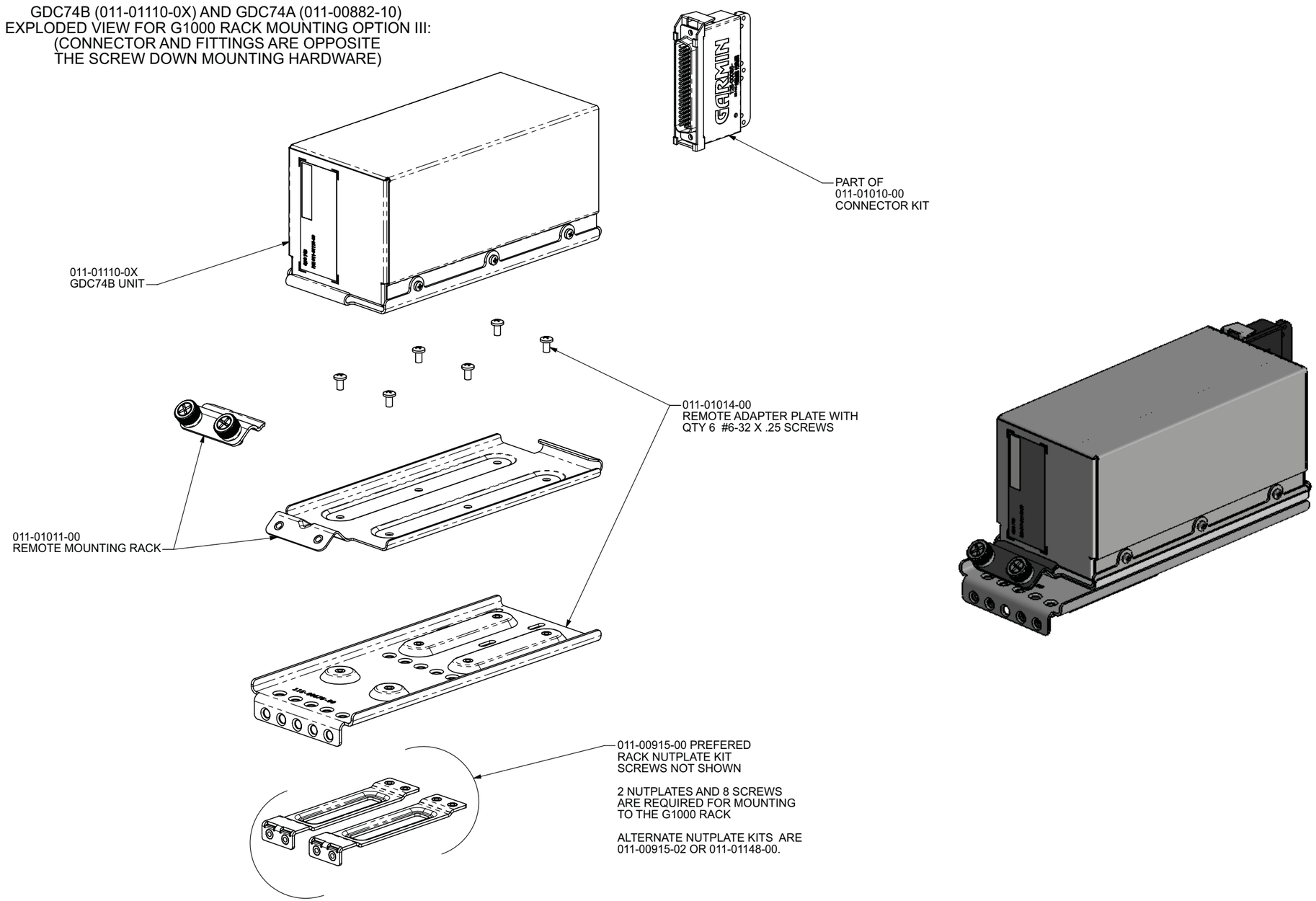

Figure B-3. GDC 74B (011-01110-0X) and GDC 74A (011-00882-10 only) Outline Drawing for G1000 Rack Mounting (Sheet 2 of 2)

GDC74B (011-01110-0X) AND GDC74A (011-00882-10)
MOUNTING ORIENTATION

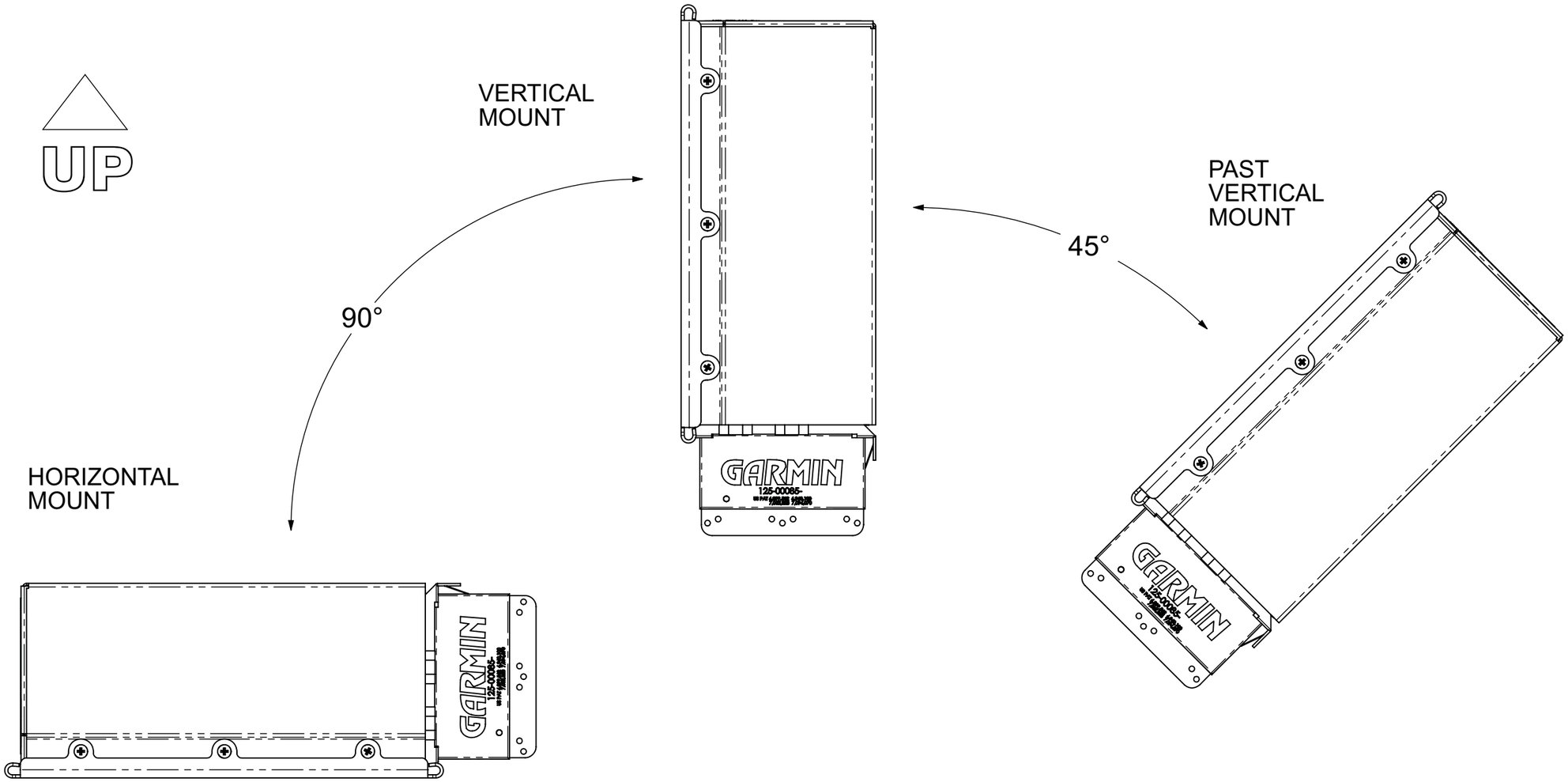

NOTES:
1. ORIENTATION MUST BE LIMITED TO RANGE SHOWN TO AVOID FLUID ACCUMULATION INSIDE UNIT.

UNIT MAY BE ORIENTED AS SHOWN IN ANY POSITION FROM HORIZONTAL TO 45 DEGREES PAST VERTICAL.

Figure B-4. GDC 74B (011-01110-0X) and GDC 74A (011-00882-10 only) Mounting Orientation (Sheet 1 of 2)

GDC74B (011-01110-0X) AND GDC74A (011-00882-10)
VERTICAL SURFACE MOUNTING ORIENTATION

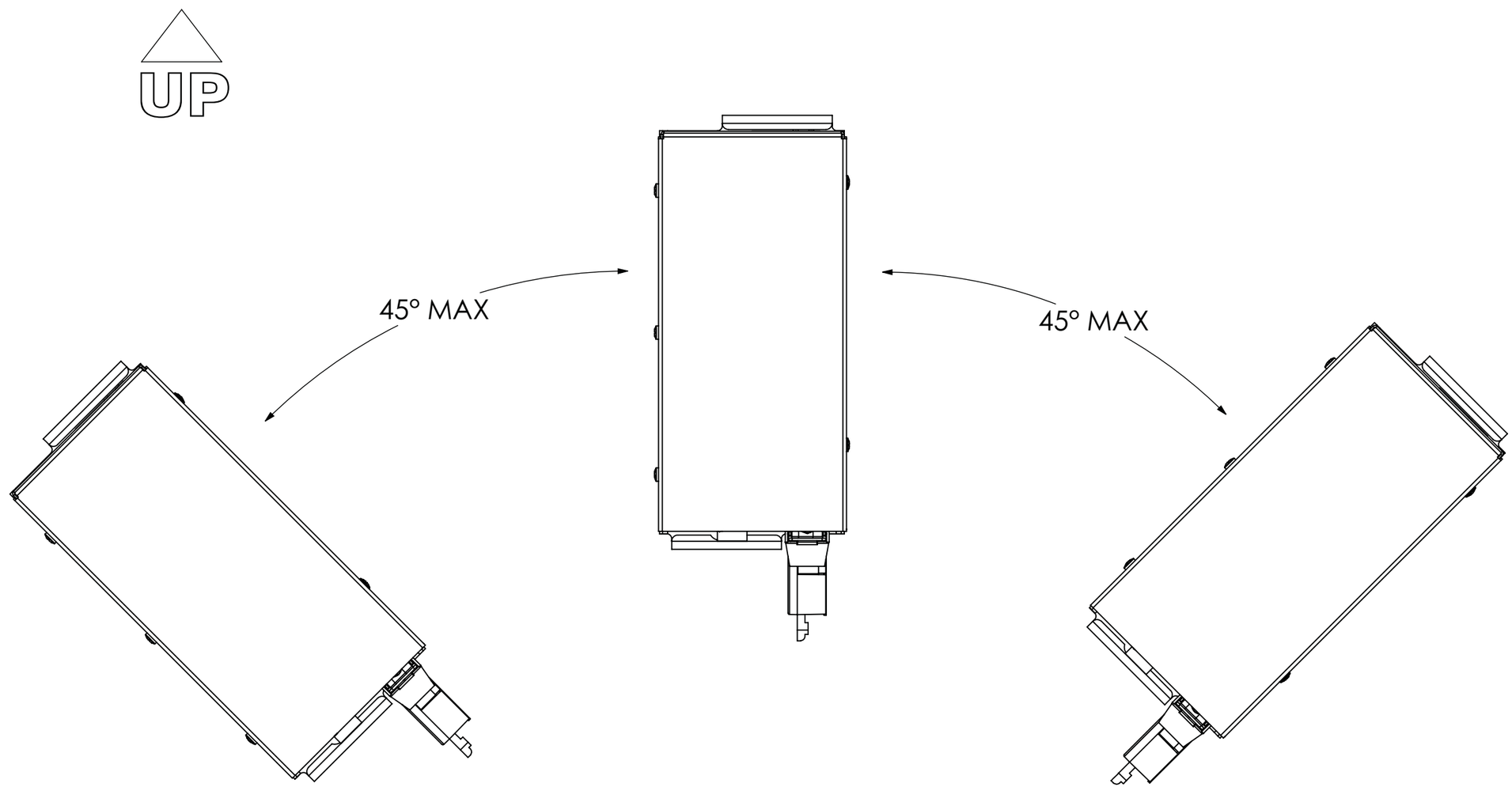

NOTES:
1. ORIENTATION MUST BE LIMITED TO RANGE SHOWN TO AVOID FLUID ACCUMULATION INSIDE UNIT.

UNIT MAY BE ORIENTED ON VERTICAL SURFACE AS SHOWN. MOUNTING ORIENTATION MUST BE WITHIN 45 DEGREES OF VERTICAL.

Figure B-4. GDC 74B (011-01110-0X) and GDC 74A (011-00882-10 only) Mounting Orientation (Sheet 2 of 2)

GDC74H (011-00882-11)

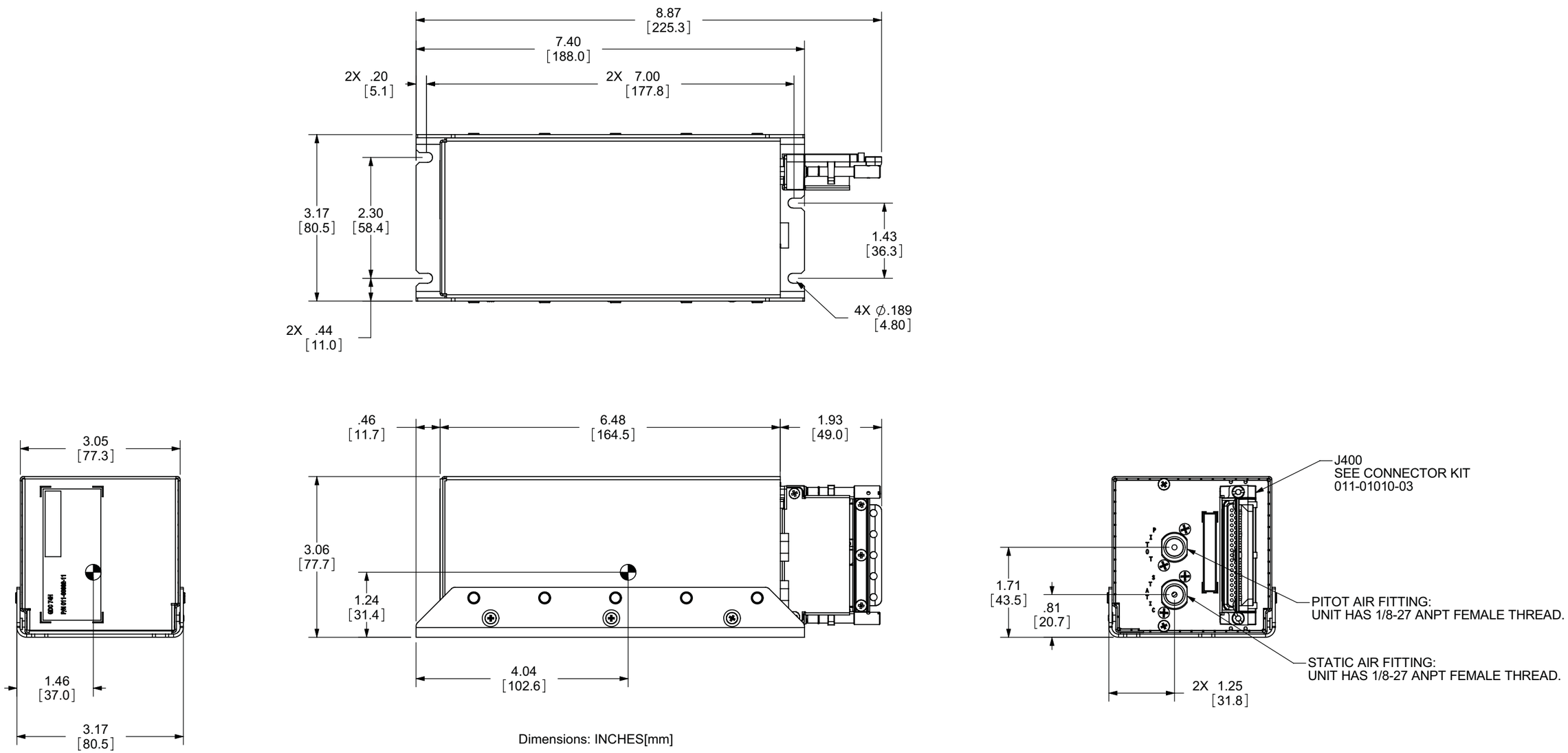

Figure C-1. GDC 74H (011-00882-11) Outline Drawing for Remote Mounting (Sheet 1 of 2)

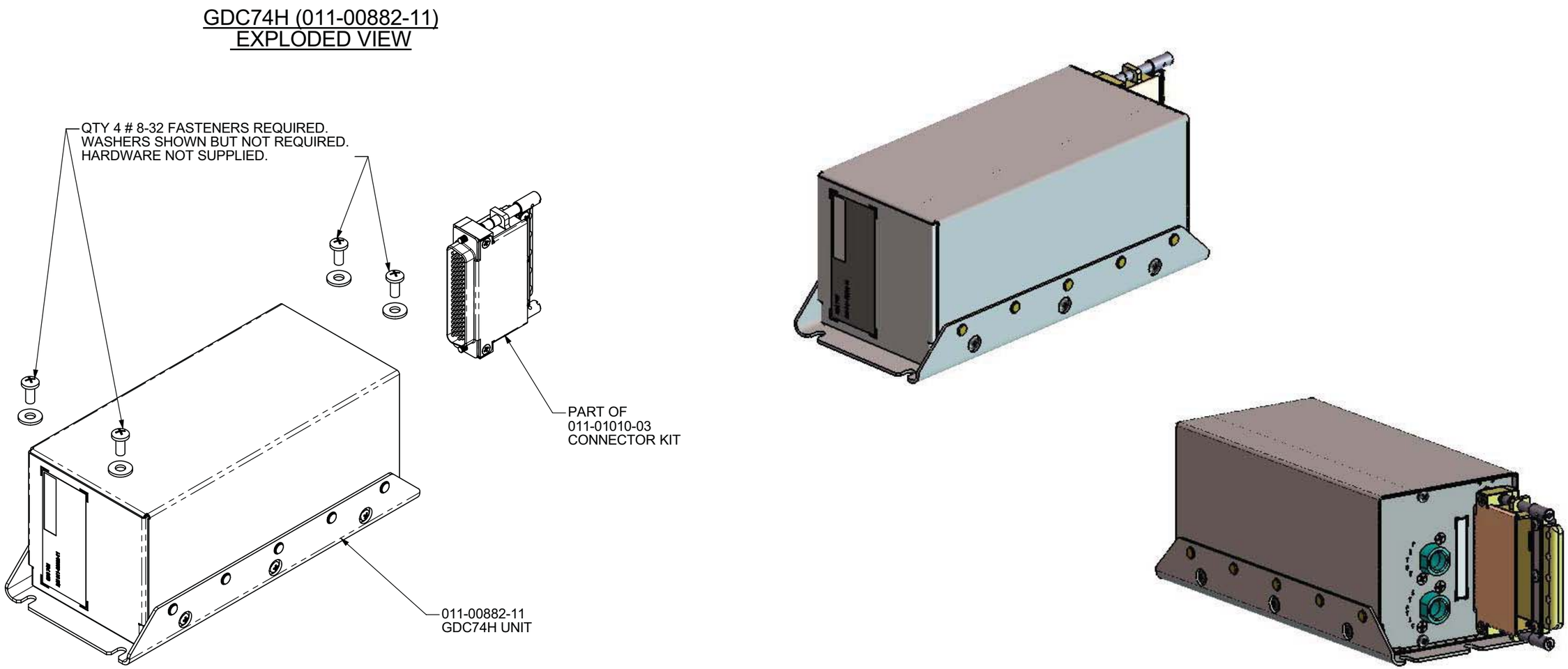

Figure C-1. GDC 74H (011-00882-11) Outline Drawing for Remote Mounting (Sheet 2 of 2)

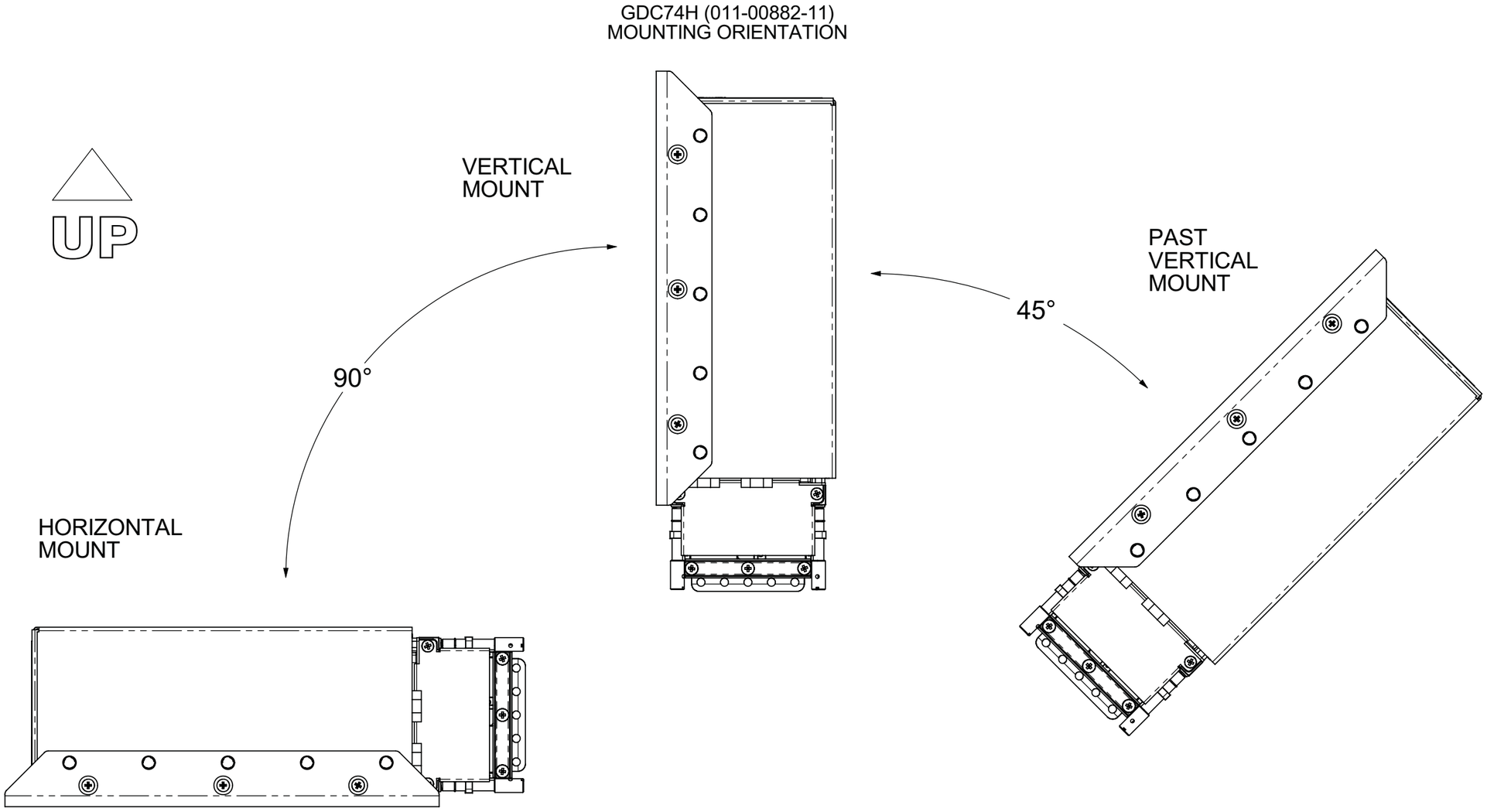

NOTES:
1. UNIT MAY BE ORIENTED THROUGHOUT THE RANGE OF THE POSITIONS SHOWN.
2. ORIENTATION MUST BE LIMITED TO RANGE SHOWN TO AVOID FLUID ACCUMULATION INSIDE UNIT.

Figure C-2. GDC 74H (011-00882-11) Mounting Orientation (Sheet 1 of 2)

GDC74H (011-00882-11)
MOUNTING ORIENTATION

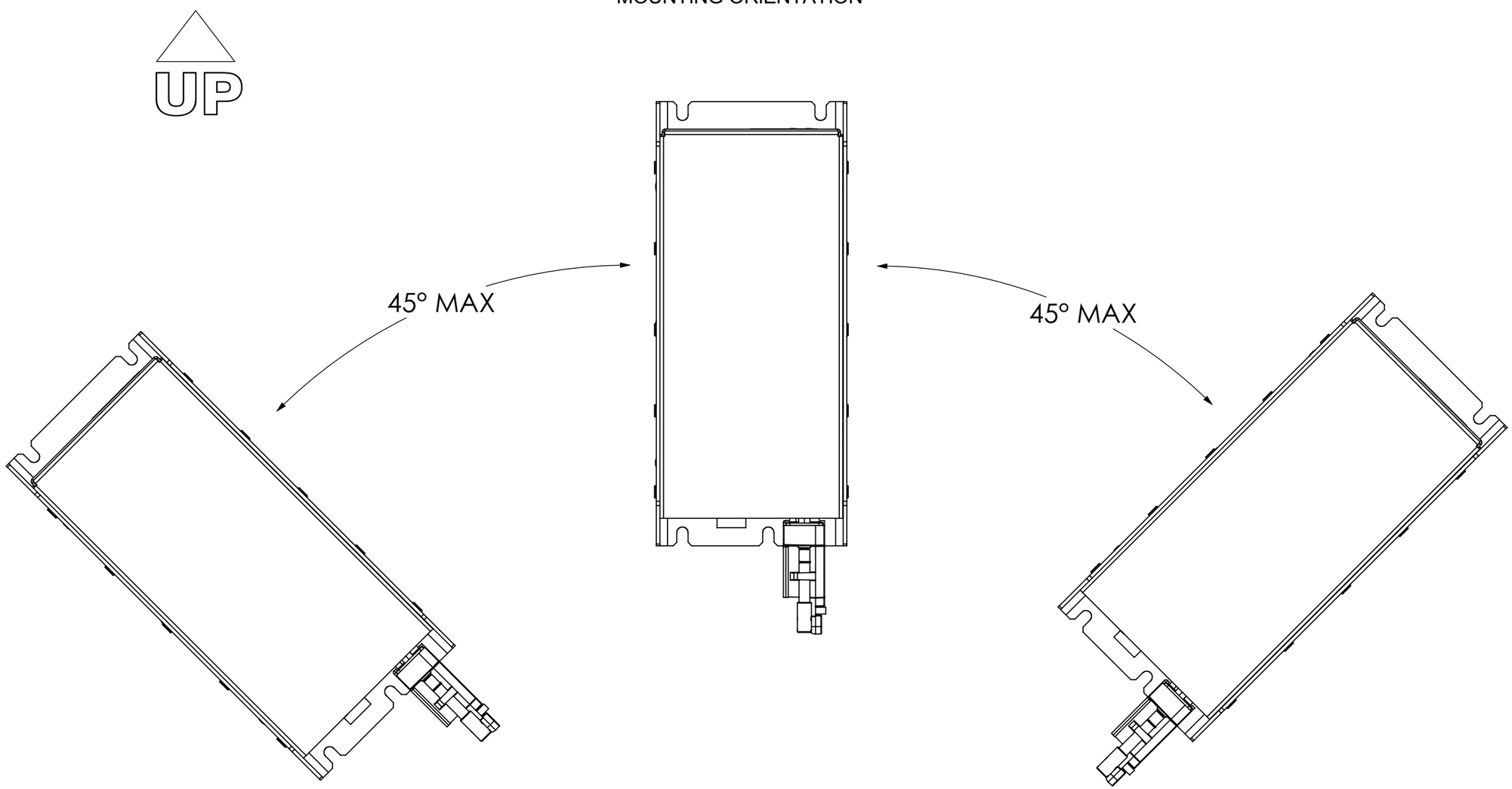

NOTES:
1. UNIT MAY BE ORIENTED THROUGHOUT THE RANGE OF THE POSITIONS SHOWN.
2. ORIENTATION MUST BE LIMITED TO RANGE SHOWN TO AVOID FLUID ACCUMULATION INSIDE UNIT.

Figure C-2. GDC 74H (011-00882-11) Mounting Orientation (Sheet 2 of 2)

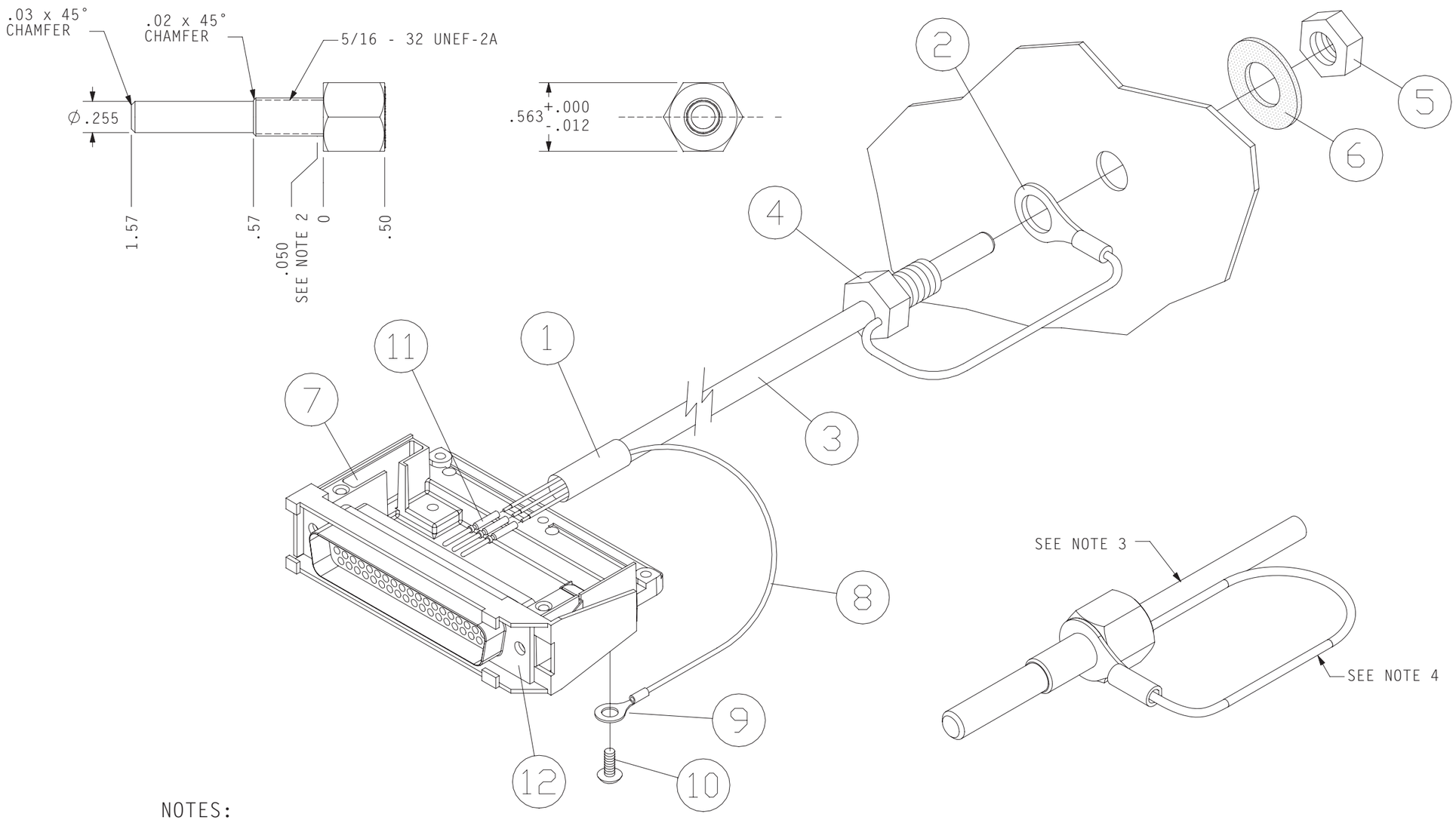

NOTES:

1. DIMENSIONS: INCHES
2. MAX HEIGHT OF INCOMPLETE THREAD: 0.050
3. CABLE: M27500-22TE3V14. SUPPLIED CABLE LENGTH TO BE 10 FEET ± 6 INCHES
4. 16 AWG WIRE: M22759/16-16. LENGTH OF WIRE OUTSIDE OF CASE TO BE 3.5 INCHES +0.25, -0.
5. SOLDER TERMINAL: MS25036-109
6. SHIELD OF CABLE ELECTRICALLY CONNECTED TO 16 AWG WIRE.
7. BUBBLE NUMBERS IN THIS DRAWING REFER TO REFERENCE NUMBERS LISTED IN TABLE 3-3.

Figure D-1. GTP 59 O.A.T. Probe Wiring Detail

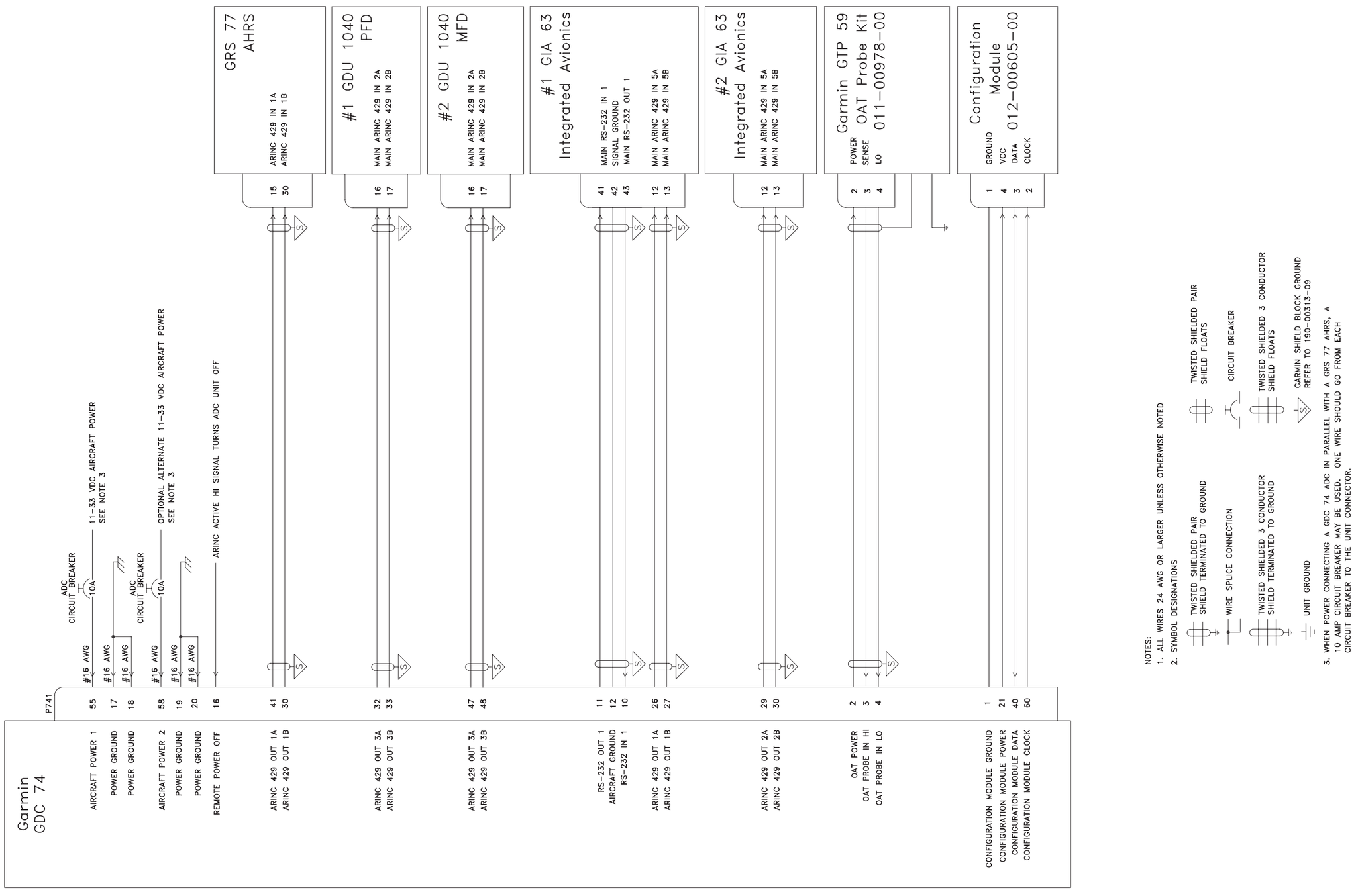

Figure E-1. GDC 74(X) Air Data Computer, Interconnect Wiring Diagram