GARMIN

GTX 3X5 Part 27 AML Maintenance Manual

Contains Instructions for Continued Airworthiness for STC SR02124SE

Rotorcraft make, model, registration number, and serial number and accompanying STC configuration information in Appendix A must be completed and saved with rotorcraft permanent records.

190-00734-21 October 2022 Revision 4

© 2022 Garmin International or its subsidiaries
All Rights Reserved

Except as expressly provided herein, no part of this manual may be reproduced, copied, transmitted, disseminated, downloaded, or stored in any storage medium for any purpose without the express prior written consent of Garmin. Garmin hereby grants permission to download a single copy of this manual and of any revision to this manual onto a hard drive or other electronic storage medium to be viewed and to print one copy of this manual or of any revision hereto, provided that such electronic or printed copy of this manual or revision must contain the complete text of this copyright notice and provided further that any unauthorized commercial distribution of this manual or any revision hereto is strictly prohibited.

Garmin® is a registered trademark of Garmin International or its subsidiaries. GDU™ and GTN™ are trademarks of Garmin International or its subsidiaries. These trademarks may not be used without the express permission of Garmin.

Adobe® is a registered trademark of Adobe Systems Incorporated. All rights reserved.

© 2022 Bluetooth® word mark and logos are registered trademarks owned by Bluetooth SIG, Inc. and any use of such marks by Garmin is under license. Other trademarks and trade names are those of their respective owners.

At Garmin, we value your opinion. For comments about this guide, please e-mail: Techpubs.Salem@garmin.com.

For information regarding the Aviation Limited Warranty, refer to Garmin's website.

Garmin International, Inc.
1200 E. 151st Street
Olathe, KS 66062 USA
Telephone: (913) 397-8200
Aviation Dealer Technical Support Line (Toll Free): (888) 606-5482
www.garmin.com

Garmin (Europe) Ltd.
Liberty House
Bull Copse Road
Hounsdown Business Park
Southampton, SO40 9LR, UK
Telephone: +44 (0) 23 8052 4000
Fax: +44 (0) 23 8052 4004
Aviation Support: +44 (0) 87 0850 1243

Garmin AT, Inc.
2345 Turner Rd. SE
Salem, OR 97032 USA
Telephone: (503) 581-8101

INFORMATION SUBJECT TO EXPORT CONTROL LAWS

This document may contain information that is subject to the Export Administration Regulations (EAR) issued by the United States Department of Commerce (15 CFR, Chapter VII, Subchapter C) and may not be exported, released, or disclosed to foreign nationals inside or outside of the United States without first obtaining an export license.

The information in this document is subject to change without notice. For updates and supplemental information regarding the operation of Garmin products, visit flyGarmin.com.

Software License Notification

AES Encryption

The product may include AES file encryption software, © 2002 DR. Brian Gladman, subject to the following license:

The free distribution and use of this software in both source and binary form is allowed (with or without changes) provided:

- Distributions of this source code include the above copyright notice, this list of conditions, and the following disclaimer.
- Distribution in binary form include the above copyright notice, this list of conditions, and the following disclaimer in the documentation and/or other associated materials.
- The copyright holder's name is not used to endorse products built using this software without specific written permission.

Alternatively, provided this notice is retained in full, this product may be distributed under the terms of the GNU General Public License (GPL) in which case the provisions of the GPL apply instead of those given above.

Disclaimer

The AES file encryption software is provided "as is" with no explicit or implied warranties in respect of its properties, including, but not limited to, correctness and/or fitness for purpose.

SOFTWARE LICENSE AGREEMENT FOR GARMIN AVIATION PRODUCTS

The software embedded in your Garmin product (the "Licensed Software") is owned by Garmin International, Inc. ("Garmin" or "us"). The Licensed Software is protected under copyright laws and international copyright treaties. The Licensed Software is provided under this Software License Agreement (hereinafter the "Agreement") and is subject to the following terms and conditions which are agreed to by End User ("Licensee", "you" or "your"), on the one hand, and Garmin and its licensors and affiliated companies of Garmin and its licensors, on the other hand. The Licensed Software is licensed, not sold, to you. Garmin and Licensee may be referred to individually as a "Party" or jointly as the "Parties."

IMPORTANT: CAREFULLY READ THIS ENTIRE AGREEMENT BEFORE USING THIS PRODUCT. INSTALLING, COPYING, OR OTHERWISE USING THIS PRODUCT INDICATES YOUR ACKNOWLEDGMENT THAT YOU HAVE READ THIS AGREEMENT AND AGREE TO ITS TERMS AND CONDITIONS. IF YOU DO NOT AGREE TO THESE TERMS AND CONDITIONS, YOU MAY NOT USE THIS PRODUCT.

1. **Definitions**. The following capitalized terms shall have the meanings set forth below:
   a. "Device" means any Garmin device that is delivered by or on behalf of Garmin to Licensee onto which the Licensed Software is installed.
   b. "Documentation" means Gamin's then-current instructional, technical or functional documentation relating to the Devices or Licensed Software which is delivered or made available by Garmin in connection with this Agreement.
   c. "Licensed Software" means the software in binary executable form that is embedded in the Devices and/or made available for use on the Devices via a software loader card.
   d. "Permitted Purpose" means operating and using the Device on which the Licensed Software is installed for the Device's intended use.

2. **License**.
   a. License Grant. Subject to the terms and conditions of this Agreement and Licensee's compliance with the terms and conditions of this Agreement, Garmin hereby grants to Licensee a limited, royalty-free, non-exclusive, non-sublicenseable, non-transferable and revocable right and license to use and perform the Licensed Software as installed on the Devices and the Documentation solely for the Permitted Purpose and only during the term of this Agreement, provided that the Licensed Software may only be used by Licensee on Devices on which the Licensed Software has been installed or otherwise made available by Garmin.
   b. Reservation of Rights. Garmin retains exclusive ownership of all right, title and interest in and to the Licensed Software and Documentation. All of Gamin's rights in and to the Licensed Software and Documentation not expressly licensed to Licensee under Section 2.1 are expressly reserved for Garmin. Nothing contained in this Agreement shall be construed as conferring by implication, acquiescence, or estoppel any license or other right upon Licensee. Without limiting the foregoing, the Parties acknowledge and agree that this Agreement grants Licensee a license of the Licensed Software under the terms of Section 2.1, and shall not in any manner be construed as a sale of the Licensed Software or any rights in the Licensed Software.

3. **Restrictions; Protection and Third Party Devices**.
   a. Prohibited Uses. Licensee shall not, shall not attempt to and shall not permit any third party to:
   (a) sublicense, lease, loan, sell, resell, market, transfer, rent, disclose, demonstrate, or distribute the Licensed Software or Documentation to any third party; (b) uninstall the Licensed Software from the Device on which it was originally installed; (c) make any use of or perform any acts with respect to the Licensed Software or Documentation other than as expressly permitted in accordance with the terms of this Agreement; (d) use the Licensed Software or Documentation in any manner that violates any applicable law; (e) reproduce or copy the Licensed Software; (f) modify, adapt, alter, translate, port, create derivative works of, reverse engineer, decompile or disassemble the Licensed Software or Documentation or otherwise derive the source code or other proprietary information or trade secrets from the Licensed Software; (g) remove, alter, or obscure any proprietary notices from the Licensed Software or Documentation; (h) use the Licensed Software or Documentation to provide services to third parties (such as business process outsourcing, service bureau applications or third party training); (i) use the Licensed Software on any equipment, hardware or device other than a Device; or (j) export, re-export or otherwise distribute, directly or indirectly, the Licensed Software or Documentation to a jurisdiction or country to which the export, re-export or distribution of such Licensed Software or Documentation is prohibited by applicable law.

b. Protection of Software and Documentation. Licensee shall use its best efforts to protect the Licensed Software and Documentation from unauthorized access, distribution, modification, display, reproduction, disclosure or use with at least the same degree of care as Licensee normally uses in protecting its own software and documentation of a similar nature from unauthorized access, distribution, modification, display, reproduction, disclosure or use. Licensee shall limit access to the Licensed Software and Documentation to only those employees of Licensee who require access to the Licensed Software or Documentation for the Permitted Purpose and who have been made aware of the restrictions set forth in this Agreement. Licensee shall take prompt and appropriate action to prevent unauthorized use or disclosure of the Licensed Software and Documentation.

4. **Term and Termination**.

a. Term. The term of this Agreement shall commence on the Effective Date, and shall continue in perpetuity thereafter, unless terminated earlier as provided in this Section 4.

b. Termination by Garmin. Garmin may immediately terminate this Agreement upon written notice to Licensee if Licensee commits a material breach of this Agreement or breaches a material term of this Agreement.

c. Effect of Termination. Upon any termination of this Agreement for any Party: (a) Licensee shall immediately cease all use of the Licensed Software and Documentation; (b) all rights and licenses granted to Licensee to the Licensed Software and Documentation and Gamin's related obligations shall immediately terminate; and (c) Sections 4.3, 5 and 6 shall survive.

5. **Disclaimer; Limitations of Liability; Indemnity**.

a. DISCLAIMER. TO THE MAXIMUM EXTENT PERMITTED BY APPLICABLE LAW, THE LICENSED SOFTWARE AND DOCUMENTATION (INCLUDING ANY RESULTS TO BE OBTAINED FROM ANY USE OF THE LICENSED SOFTWARE AND DOCUMENTATION) ARE PROVIDED “AS IS” AND “AS AVAILABLE” WITH NO WARRANTIES, GUARANTEES OR REPRESENTATIONS AND NEITHER GARMIN NOR ITS AFFILIATES MAKE ANY REPRESENTATION, WARRANTY OR GUARANTEE, STATUTORY OR OTHERWISE, UNDER LAW OR FROM THE COURSE OF DEALING OR USAGE OF TRADE, EXPRESS OR IMPLIED, INCLUDING ANY WARRANTIES OF MERCHANTABILITY, FITNESS FOR A PARTICULAR PURPOSE, NON-INTERFERENCE, NON-INFRINGEMENT, TITLE, OR SIMILAR, UNDER THE LAWS OF ANY JURISDICTION. GARMIN DOES NOT WARRANT THAT THE LICENSED SOFTWARE OR DOCUMENTATION WILL MEET LICENSEE'S REQUIREMENTS OR THAT OPERATION OF THE SOFTWARE WILL BE UNINTERRUPTED OR ERROR FREE. LICENSEE ASSUMES THE ENTIRE RISK AS TO THE QUALITY AND PERFORMANCE OF THE LICENSED SOFTWARE AND DOCUMENTATION. THE LICENSED SOFTWARE IS NOT INTENDED FOR USE IN ANY NUCLEAR, MEDICAL, OR OTHER INHERENTLY DANGEROUS APPLICATIONS, AND GARMIN DISCLAIMS ALL LIABILITY FOR ANY DAMAGE OR LOSS CAUSED BY SUCH USE OF THE LICENSED SOFTWARE.

b. EXCLUSION OF DAMAGES; LIMITATION OF LIABILITY. NOTWITHSTANDING ANYTHING TO THE CONTRARY HEREIN, TO THE MAXIMUM EXTENT PERMITTED BY APPLICABLE LAW, UNDER NO CIRCUMSTANCES AND REGARDLESS OF THE NATURE OF ANY CLAIM SHALL GARMIN BE LIABLE TO LICENSEE FOR AN AMOUNT IN EXCESS OF USD $100, OR BE LIABLE IN ANY AMOUNT FOR ANY SPECIAL, INCIDENTAL, CONSEQUENTIAL, PUNITIVE OR INDIRECT DAMAGES, LOSS OF GOODWILL OR PROFITS, LIQUIDATED DAMAGES, DATA LOSS, COMPUTER FAILURE OR MALFUNCTION, ATTORNEYS' FEES, COURT COSTS, INTEREST OR EXEMPLARY OR PUNITIVE DAMAGES, ARISING OUT OF OR IN CONNECTION WITH THE USE OR PERFORMANCE OR NON-PERFORMANCE OF THE LICENSED SOFTWARE OR DOCUMENTATION, EVEN IF GARMIN HAS BEEN ADVISED OF THE POSSIBILITY OF SUCH LOSS OR DAMAGES.

c. Indemnity. Licensee shall indemnify, defend and hold Garmin and its affiliates harmless against any and all losses, claims, actions, causes of action, liabilities, demands, fines, judgments, damages and expenses suffered or incurred by Garmin or its affiliated companies in connection with: (a) any use or misuse of the Licensed Software or Documentation by Licensee or any third party in Licensee's reasonable control; or
(b) Licensee's breach of this Agreement.

6. **General**.

a. No Devices or Services. Licensee acknowledges and agrees that nothing in this Agreement shall be construed as requiring Garmin to: (a) provide or supply the Devices or any other devices or hardware to Licensee; (b) grant any

licenses to any software other than the Licensed Software; or (c) provide any services, such as support, maintenance, installation or professional services for the Licensed Software.

b. Non-Exclusive. Each Party's rights and obligations under this Agreement are non-exclusive. Garmin is not precluded from marketing, licensing, providing, selling or distributing the Licensed Software or Documentation, or any other products, software, documentation or services, either directly or through any third party.

c. Assignment. Licensee may not assign this Agreement or any of its rights, interests or obligations hereunder without the prior written consent of Garmin. Any purported assignment in violation of this Section 6.3 shall be null and void. Subject to the foregoing, this Agreement shall be binding upon and shall inure to the benefit of the Parties and their respective successors and permitted assigns and transferees.

d. Feedback and Data. Licensee may from time to time provide feedback, comments, suggestions, questions, ideas, or other information to Garmin concerning the Licensed Software or Documentation or Gamin's products, services, technology, techniques, processes or materials ("Feedback"). Garmin may in connection with any of its products or services freely use, copy, disclose, license, distribute and otherwise exploit such Feedback in any manner without any obligation, payment, royalty or restriction whether based on intellectual property rights or otherwise.

e. Governing Law. The validity, interpretation and enforcement of this Agreement will be governed by the substantive laws, but not the choice of law rules, of the state of Kansas. This Agreement shall not be governed by the 1980 UN Convention on Contracts for the International Sale of Goods.

f. Legal Compliance. You represent and warrant that (i) you are not located in a country that is subject to a U.S. Government embargo, or has been designated by the U.S. Government as a "terrorist supporting" country, and (ii) you are not listed on any U.S. Government list of prohibited or restricted parties.

g. Injunctive Relief. The Parties acknowledge and agree that irreparable damage would occur if any provision of this Agreement was not performed in accordance with its specific terms or was otherwise breached and as such, the Parties will be entitled to an injunction or injunctions to prevent breaches of this Agreement and to enforce specifically the performance of the terms and provisions of this Agreement without proof of actual damages, this being in addition to any other remedy to which any Party is entitled at law or in equity.

h. Amendments and Waivers. This Agreement may be amended and any provision of this Agreement may be waived, provided that any such amendment or waiver will become and remain binding upon a Party only if such amendment or waiver is set forth in a writing by such Party. No course of dealing between or among any persons having any interest in this Agreement will be deemed effective to modify, amend or discharge any part of this Agreement or any rights or obligations of any Party under or by reason of this Agreement. No delay or failure in exercising any right, power or remedy hereunder will affect or operate as a waiver thereof; nor will any single or partial exercise thereof or any abandonment or discontinuance of steps to enforce such a right, power or remedy preclude any further exercise thereof or of any other right, power or remedy. The rights and remedies hereunder are cumulative and not exclusive of any rights or remedies that any Party would otherwise have.

i. Severability. The provisions of this Agreement will be severable in the event that for any reason whatsoever any of the provisions hereof are invalid, void or otherwise unenforceable, any such invalid, void or otherwise unenforceable provisions will be replaced by other provisions which are as similar as possible in terms to such invalid, void or otherwise unenforceable provisions but are valid and enforceable and the remaining provisions will remain valid and enforceable to the fullest extent permitted by applicable law, in each case so as to best preserve the intention of the Parties with respect to the benefits and obligations of this Agreement.

j. No Third-Party Beneficiaries. This Agreement is solely for the benefit of the Parties and does not confer on third parties any remedy, claim, reimbursement, claim of action or other right in addition to those existing without reference to this Agreement.

k. Entire Agreement. This Agreement shall constitute the entire agreement between Garmin and you with respect to the subject matter hereof and will supersede all prior negotiations, agreements and understandings of Garmin and you of any nature, whether oral or written, with respect to such subject matter.

l. Interpretation. In this Agreement: (a) headings are for convenience only and do not affect the interpretation of this Agreement; (b) the singular includes the plural and vice versa; (c) the words 'such as', 'including', 'particularly' and similar expressions are not used as, nor are intended to be, interpreted as words of limitation; (d) a reference to a person includes a natural person, partnership, joint venture, government agency, association, corporation or other body corporate; a thing includes a part of that thing; and a party includes its successors and permitted assigns; and (e) no rule of construction applies to the disadvantage of a Party because that Party was responsible for the preparation of this Agreement. Any translation of this Agreement from English is provided as a convenience only. If this Agreement is translated into a language other than English and there is a conflict of terms between the English version and the other language version, the English version will control.

RECORD OF REVISIONS

Revision	Revision Date	Revision Summary
2	2/17/20	Added new GTX 345 part numbers and added new helicopter models. Corrected formatting errors.
3	2/22/22	Minor change to add GTN Xi as an approved interface.
4	10/13/22	Minor change to add new GTX part numbers.

CURRENT REVISION DESCRIPTION

Section	Description
2.4	Updated Table 2-2 Equipment Weights with new kit part numbers.
6.1	Updated Table 6-6 GTX 3X5 Transponder Parts List with new kit part numbers.
6.1.1	Added Table 6-7 Part Numbers (Panel-Mounted).
6.1.2	Added Table 6-8 Part Numbers (Remote Horizontal Mount).
6.1.3	Added Table 6-9 Part Numbers (Remote Vertical Mount).

DEFINITIONS OF WARNINGS, CAUTIONS, AND NOTES



WARNING

*A **Warning** means that injury or death is possible if the instructions are not obeyed.*



CAUTION

*A **Caution** means that damage to the equipment is possible.*



NOTE

*A **Note** provides more information.*



WARNING

This product, its packaging, and its components contain chemicals known to the State of California to cause cancer, birth defects, or reproductive harm. This notice is being provided in accordance with California's Proposition 65. If you have any questions or would like additional information, please refer to our website at www.garmin.com/prop65.



WARNING

Perchlorate Material - special handling may apply.
Refer to www.dtsc.ca.gov./hazardouswaste/perchlorate.



CAUTION

The GTX 335/345 units have a special anti-reflective coated display that is sensitive to waxes and abrasive cleaners. CLEANERS CONTAINING AMMONIA WILL CAUSE DAMAGE TO THE ANTI-REFLECTIVE COATING. Clean the display with a clean, lint-free cloth, with a cleaner that is safe for anti-reflective coatings.



NOTE

Screen shots are intended to provide visual reference only. All information depicted in screen shots, such as software file names, versions, and part numbers, is subject to change and may not be up-to-date.

TABLE OF CONTENTS

1 INTRODUCTION 1-1
1.1 Content, Scope, and Purpose 1-2
1.2 Organization 1-3
1.3 Applicability 1-4
1.4 Publications 1-4
1.5 Revision and Distribution 1-4
1.6 Reference 1-5

2 SYSTEM DESCRIPTION 2-1
2.1 GTX 335/335R 2-2
2.2 GTX 345/345R 2-4
2.3 Electrical Load Information 2-6
2.4 Weight and Balance 2-7
2.5 Unit Storage 2-7

3 GTX CONTROL AND OPERATION 3-1
3.1 GTX 335/345 3-2
3.2 GTX 335R/345R 3-5
3.3 GTX 3X5 Install Tool 3-6

4 INSTRUCTIONS FOR CONTINUED AIRWORTHINESS 4-1
4.1 Applicability 4-2
4.2 Airworthiness Limitations 4-3
4.3 Servicing Information 4-4
4.4 Maintenance/Inspection Intervals 4-5
4.5 Visual Inspection 4-6
4.6 Electrical Bonding Test 4-9
4.7 Additional Instructions 4-9

5 TROUBLESHOOTING 5-1
5.1 GTX General Troubleshooting 5-2
5.2 GTX Failure Annunciations 5-4
5.3 Connector Pinout Information 5-14

6 UNIT REMOVAL AND RE-INSTALLATION 6-1
6.1 GTX 3X5 6-2
6.2 Transponder Antenna 6-18
6.3 Traffic Annunciator (If Installed) 6-18

7 SOFTWARE 7-1
7.1 Software Check 7-2
7.2 GTX 3X5/3X5R Software Update 7-4

8 SYSTEM CONFIGURATION AND CHECKOUT 8-1
8.1 Overview 8-2
8.2 System Checkout 8-2
8.3 Configuration 8-2
8.4 GTX Test 8-3

9 SYSTEM RETURN TO SERVICE 9-1
9.1 Maintenance Records 9-1

APPENDIX A INSTALLATION-SPECIFIC INFORMATION A-1
A.1 Rotorcraft-Specific Information A-2
A.2 Equipment Interfaced to the GTX A-4
A.3 GTX 3X5 Airframe-Specific Installation A-11
A.4 GTX 3X5 Configuration Log A-28
A.5 GTX 335/335R Configuration Log A-29
A.6 GTX 345/345R Configuration Log A-30
APPENDIX B ELECTRICAL BONDING PROCEDURES B-1

LIST OF FIGURES

Figure 2-1 GTX 335 or GTX 335R Interface Summary 2-3
Figure 2-2 GTX 345 or GTX 345R Interface Summary 2-5
Figure 3-1 GTX 335/345 Front Panel 3-2
Figure 3-2 GTN 7XX Transponder Control 3-5
Figure 3-3 GTN 6XX Transponder Control 3-5
Figure 3-4 USB A and USB B Connectors 3-6
Figure 3-5 GTX 3X5/3X5R State Page 3-7
Figure 3-6 GTX 3X5/3X5R Status Page 3-8
Figure 3-7 GTX 3X5/3X5R Configuration Group 3-9
Figure 3-8 GTX 3X5/3X5R Diagnostics Group 3-10
Figure 3-9 GTX 3X5/3X5R Product Data Group 3-11
Figure 5-1 GTX Transponder Troubleshooting (All Models) 5-3
Figure 5-2 GTX 3X5 Transponder Alerts 5-4
Figure 5-3 GTX 3X5 Install Tool Failure/Fault Messages 5-9
Figure 5-4 Rear View, Connector J3251 5-14
Figure 5-5 Rear View, Connector J3252 5-16
Figure 6-1 GTX 3X5 Connector Kits 6-2
Figure 6-2 GTX 3X5 without GPS Backplate Assembly 6-3
Figure 6-3 GTX 3X5 with GPS Backplate Assembly 6-4
Figure 6-4 GTX 3X5 Vertical Mount without GPS, Backplate Assembly 6-5
Figure 6-5 GTX 3X5 Vertical Mount with GPS, Backplate Assembly 6-6
Figure 6-6 GTX 3X5 Vertical Mount with TNC XPDR Backplate Assembly 6-7
Figure 6-7 Panel-Mounted GTX 3X5 Transponder 6-11
Figure 6-8 GTX 3X5R Remote Transponder with Horizontal Mount 6-13
Figure 6-9 GTX 3X5R Remote Transponder with Vertical Mount 6-15
Figure 6-10 Garmin Altitude Encoder with Backplate Assembly 6-17
Figure 6-11 Traffic Annunciator Installation 6-19
Figure 7-1 GTX 3X5 Start-Up Screen 7-2
Figure 7-2 GTX 3X5 Product Data Page 7-2
Figure 7-3 GTN 6XX/7XX System Page 7-3
Figure 7-4 Install Tool Dialog Box 7-4
Figure 7-5 GTX 3X5 Install Tool Software Upload Page 7-5
Figure A-1 Rotorcraft-Specific Information A-2
Figure A-2 Interfaced Equipment Table A-5
Figure B-1 Aluminum Tape Joint B-2

LIST OF TABLES

Table 1-1 Reference Documentation 1-4
Table 2-1 GTX Electrical Load 2-6
Table 2-2 Equipment Weights 2-7
Table 4-1 Maintenance/Inspection Intervals 4-5
Table 5-1 J3251 Pinout 5-14
Table 5-2 J3252 Pinout 5-16
Table 5-3 GTX 3X5/3X5R Encoded Altitude Pin Assignments 5-17
Table 5-4 GTX 3X5/3X5R Discrete Outputs 5-18
Table 5-5 GTX 3X5/3X5R Configurable Output Pins 5-18
Table 5-6 GTX 3X5/3X5R Discrete Inputs 5-19
Table 5-7 GTX 3X5/3X5R Configurable Input Pins 5-19
Table 5-8 GTX 3X5/3X5R RS-232 Connections 5-20
Table 5-9 GTX 3X5/3X5R ARINC 429 Connections 5-20
Table 5-10 GTX 3X5/3X5R RS-422 Connections 5-20
Table 5-11 GTX 345/345R HSDB Connections 5-21
Table 6-1 GTX 3X5 Connector Kit 6-2
Table 6-2 Standard Mount Backplate (P/N 011-02976-00 and -01) 6-3
Table 6-3 Vertical Mount Backplate (P/N 011-02976-10) 6-5
Table 6-4 Vertical Mount Backplate (P/N 011-02976-11) 6-6
Table 6-5 Vertical Mount Backplate (P/N 011-02976-12) 6-7
Table 6-6 GTX 3X5 Transponder Parts List 6-8
Table 6-7 Part Numbers (Panel-Mounted) 6-10
Table 6-8 Part Numbers (Remote Horizontal Mount) 6-12
Table 6-9 Part Numbers (Remote Vertical Mount) 6-14
Table 6-10 Garmin Altitude Encoder Kit (P/N 011-03080-00) 6-17
Table 6-11 Traffic Annunciator Installation 6-19

1 INTRODUCTION

1.1 Content, Scope, and Purpose 1-2
1.2 Organization 1-3
1.3 Applicability 1-4
1.4 Publications 1-4
1.5 Revision and Distribution 1-4
1.6 Reference 1-5
1.6.1 Terminology 1-5
1.6.2 Acronyms 1-5

1.1 Content, Scope, and Purpose

This document provides Instructions for Continued Airworthiness (ICA) of the GTX 3X5 with ADS-B functionality installed and compliant to ADS-B Out Version 2 under AML STC SR02124SE. This document satisfies the requirements for continued airworthiness as defined by 14 CFR Part 27.1529 and 14 CFR Part 27 Appendix A. Information in this document is required to maintain the continued airworthiness of the GTX 3X5.

1.2 Organization

The following outline briefly describes the organization of this manual:

Section 2: System Overview

- Equipment features
- Electrical load information
- Weight and balance

Section 3: Control and Operation

- Controlling the GTX
- Using the GTX 3X5 Install Tool

Section 4: Instructions for Continued Airworthiness

- Applicability
- Airworthiness limitations
- Service information
- Maintenance intervals
- Bonding test

Section 5: Troubleshooting

- General troubleshooting
- Failure annunciations
- Connector pinout information

Section 6: Unit Removal and Re-Installation

- Removal and re-installation of the GTX
- Removal and re-installation of the Garmin Altitude Encoder
- Removal and re-installation of the transponder antenna
- Removal and re-installation of the traffic annunciator (if installed)

Section 7: Software

- Software check
- Software update

Section 8: System Configuration and Checkout

- System checkout
- Configuration
- GTX tests

Section 9: System Return to Service Procedure

- Maintenance records

Appendix A: Rotorcraft-Specific Information

- Rotorcraft-specific information form
- Equipment interfaced to the GTX
- Wire routing
- Configuration logs

Appendix B: Special Bonding Procedures

- Surface preparation
- Aluminum tape repair and replacement considerations

1.3 Applicability

This document applies to all rotorcraft with the GTX 3X5 installed in accordance with STC SR02124SE. Modification of a rotorcraft by this Supplemental Type Certificate (STC) obligates the rotorcraft operator to implement the specific maintenance practices and/or airworthiness limitations provided in this document. This is in addition to the rotorcraft's existing approved maintenance, inspection, and airworthiness limitations programs.

1.4 Publications

In addition to this manual, the following documents are recommended to perform maintenance based on the installed and interfaced equipment. It is the responsibility of the owner/operator to ensure the latest applicable versions of these documents are used during operation, servicing, or maintenance of the rotorcraft.

Table 1-1 Reference Documentation

Document	Garmin P/N	Applicable Sections
GTX 3X5 Part 27 AML STC Equipment List	005-00734-A5	All
GTN 625/635/650 Pilot's Guide	190-01004-03	2.1 and 15.3.2
GTN 725/750 Pilot's Guide	190-01007-03	2.1 and 16.3.2
GTN Xi Series Pilot's Guide	190-02327-03	1 (Pilot Interface) and 5 (FIS-B Product Status)

1.5 Revision and Distribution

This document is required for maintaining the continued airworthiness of the rotorcraft. Garmin Dealers may obtain the latest revision of this document at the Garmin Dealer Resource Center website.

Dealers are notified of manual revision changes by way of a Garmin Service Bulletin.

Owner and operators may obtain the latest revision of this document at flyGarmin.com or by contacting a Garmin dealer. Garmin contact information is available at flyGarmin.com.

1.6 Reference

1.6.1 Terminology

Except where specifically noted, references made to the GTX 3X5 will apply to the GTX 335/335R/345/345R. ADS-B or ADS-B Out refers to Version 2 ADS-B Out only. ADS-B In refers to TIS-B traffic and FIS-B weather received from ground stations over UAT, as well as ADS-B and ADS-R traffic targets received directly over 1090 MHz or UAT.

Throughout this document, references will be made to metallic rotorcraft. For the purposes of this manual, metallic rotorcraft will be those with an aluminum skin. Nonmetallic rotorcraft refers to all other rotorcraft (e.g., rotorcraft with composite skin).

Unless otherwise stated, all units of measure are in US standard units.

The term squitter refers to a burst or broadcast of data that is transmitted periodically by a Mode S transponder without interrogation.

1.6.2 Acronyms

AC: Advisory Circular
ADC: Air Data Computer
ADS-B: Automatic Dependent Surveillance - Broadcast
AHRS: Attitude Heading Reference System
AML: Approved Model List
ATC: Air Traffic Control
ATCRBS: Air Traffic Control Radar Beacon System
EGNOS: European Geostationary Navigation Overlay Service
ES: Extended Squitter
FAA: Federal Aviation Administration
FIS-B: Flight Information System-Broadcast
GAE: Garmin Altitude Encoder
GNS: Garmin Navigation System
GNSS: Global Navigation Satellite System
GPS: Global Positioning System
GTN: Garmin Touchscreen Navigator
GTX: Garmin Transponder
HAT: Height Above Terrain
ICA: Instructions for Continued Airworthiness
ICAO: International Civil Aviation Organization
I/O: Input/Output
MFD: Multifunction Display
PED: Portable Electronic Device
SBAS: Satellite-Based Augmentation System
SPI: Special Position Identifier
SRM: Structural Repair Manual
STC: Supplemental Type Certificate
TAS: Traffic Advisory System
TCAS: Traffic Alert and Collision Avoidance System
TIS: Traffic Information Service
TSO: Technical Standard Order
UAT: Universal Access Transceiver
VSWR: Voltage Standing Wave Ratio
WAAS: Wide Area Augmentation System

2 SYSTEM DESCRIPTION

2.1 GTX 335/335R 2-2
2.2 GTX 345/345R 2-4
2.3 Electrical Load Information 2-6
2.4 Weight and Balance 2-7
2.5 Unit Storage 2-7

Garmin GTX 3X5 units operate on radar frequencies receiving ground radar or TCAS interrogations. The GTX transmits a coded response of pulses to ground-based radar on a frequency of 1090 MHz. Each unit has IDENT capability and replies to ATCRBS Mode A, Mode C, and Mode S All-Call interrogation. GTX 345/345R units include ADS-B In, which provides TIS-B and FIS-B data via UAT and 1090 MHz. GTX 3X5 units offer an optional Garmin Altitude Encoder to meet the required barometric pressure altitude source and an optional internal GPS/SBAS source to meet the required GNSS position source integrity for ADS-B Out.

The Garmin transponders approved by this STC are the family of GTX 3X5 transponders.

GTX 3X5 units all provide ADS-B Out functionality. GTX 345/345R units provide ADS-B In.
GTX 3X5 models include:

- GTX 335
- GTX 345
- GTX 335R
- GTX 345R

Automatic Dependent Surveillance-Broadcast (ADS-B) technology improves situational awareness and flight safety. A Garmin transponder with ADS-B capabilities will automatically transmit position, velocity, and heading information to other aircraft and ground stations. The current air traffic control system depends on a transponder request for pertinent aircraft information; whereas ADS-B provides automatic transmission of aircraft information without a request.

2.1 GTX 335/335R

GTX 335/335R units are panel or remote-mounted units that have Mode S with ADS-B Out extended squitter capability. The panel-mounted unit contains an integrated display, while the remote-mounted unit requires an interface to a control source for normal operation and functionality.

GTX 335/335R units have these features:

- Mode S transponder
- ADS-B Out capability
- Optional internal GNSS receiver
- Optional GAE pressure sensor module
- Entry of squawk code and flight ID
- Show squawk code and flight ID
- Show pressure altitude
- Show outside air temp
- Show density altitude
- Show flight timers
- Audio output
- TIS-A traffic output to a compatible display

The transponder provides an ADS-B Out failure message to alert the crew that the unit has a degraded ADS-B system.

GTX 335/335R units interface through these:

- ARINC 429
- RS-232
- Gray code
- Discrete I/O

Figure 2-1 provides a summary of the interfaces provided for the GTX 335 or GTX 335R. For interfaces approved by this STC, refer to *GTX 3X5 Part 27 AML STC Installation Manual*.

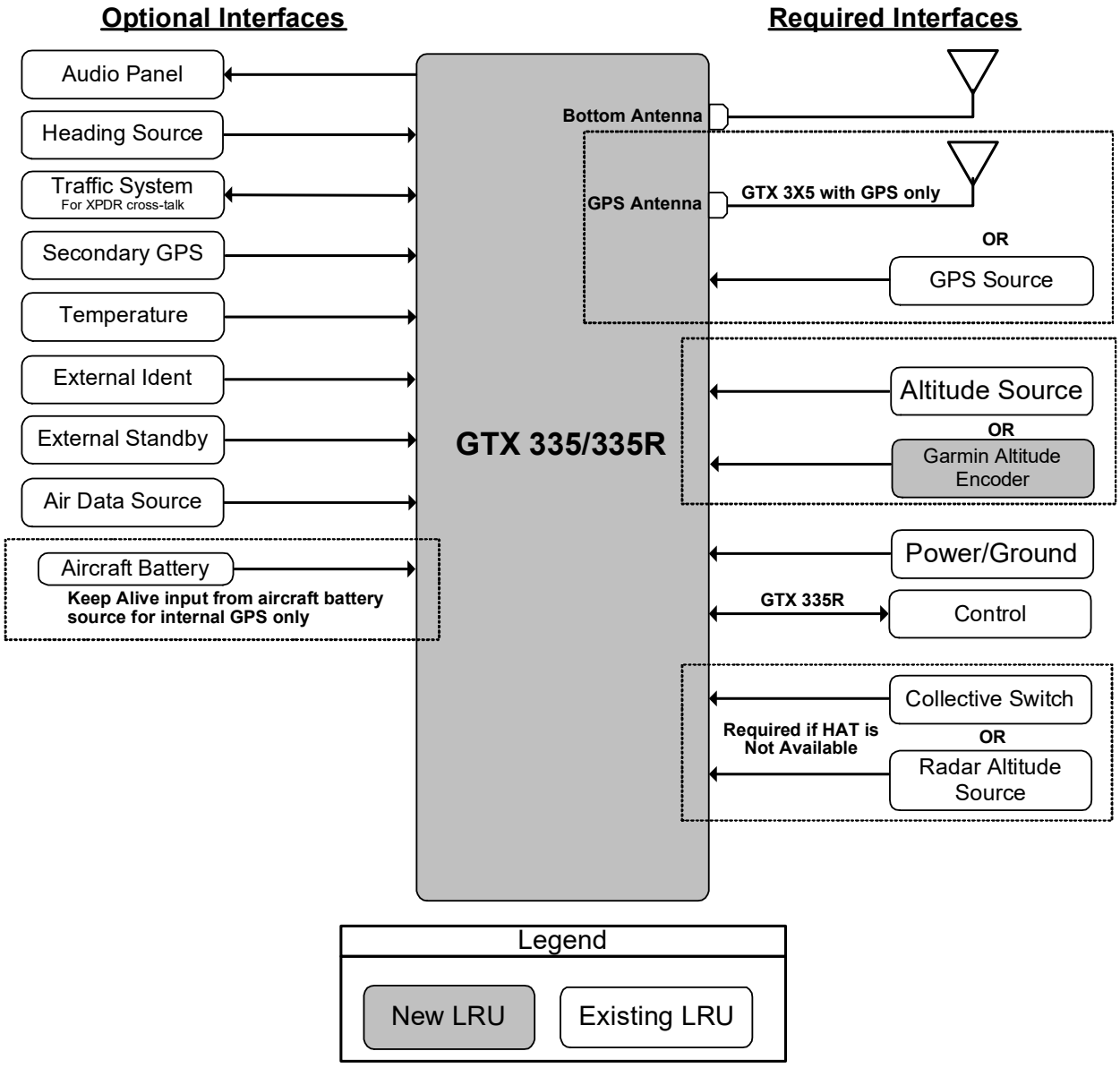

Figure 2-1 GTX 335 or GTX 335R Interface Summary

2.2 GTX 345/345R

GTX 345/345R units are panel or remote-mounted units that supply Mode S with ADS-B Out extended squitter and UAT and 1090 receivers for ADS-B In capabilities. The panel-mounted unit has an integrated display, while the remote-mounted unit requires an interface to a control source for normal operation and functionality.

GTX 345/345R units have these features:

- Mode S transponder
- ADS-B Out capability
- ADS-B In capability with built-in 1090 MHz and UAT receivers
- Optional internal GNSS receiver
- Optional GAE pressure sensor module
- Entry of squawk code and flight ID
- Show squawk code and flight ID
- Show pressure altitude
- Show outside air temp
- Show density altitude
- Show flight timers
- Audio output
- Bluetooth interface to show weather and traffic on portable devices

The transponder provides an ADS-B failure message to alert the crew that the unit has a degraded ADS-B (In or Out) system.

GTX 345/345R units interface through these:

- HSDB
- ARINC 429
- RS-232
- RS-422
- Gray code
- Discrete I/O

Figure 2-2 provides a summary of the interfaces provided for the GTX 345 or GTX 345R. For interfaces approved by this STC, refer to *GTX 3X5 Part 27 AML STC Installation Manual*.

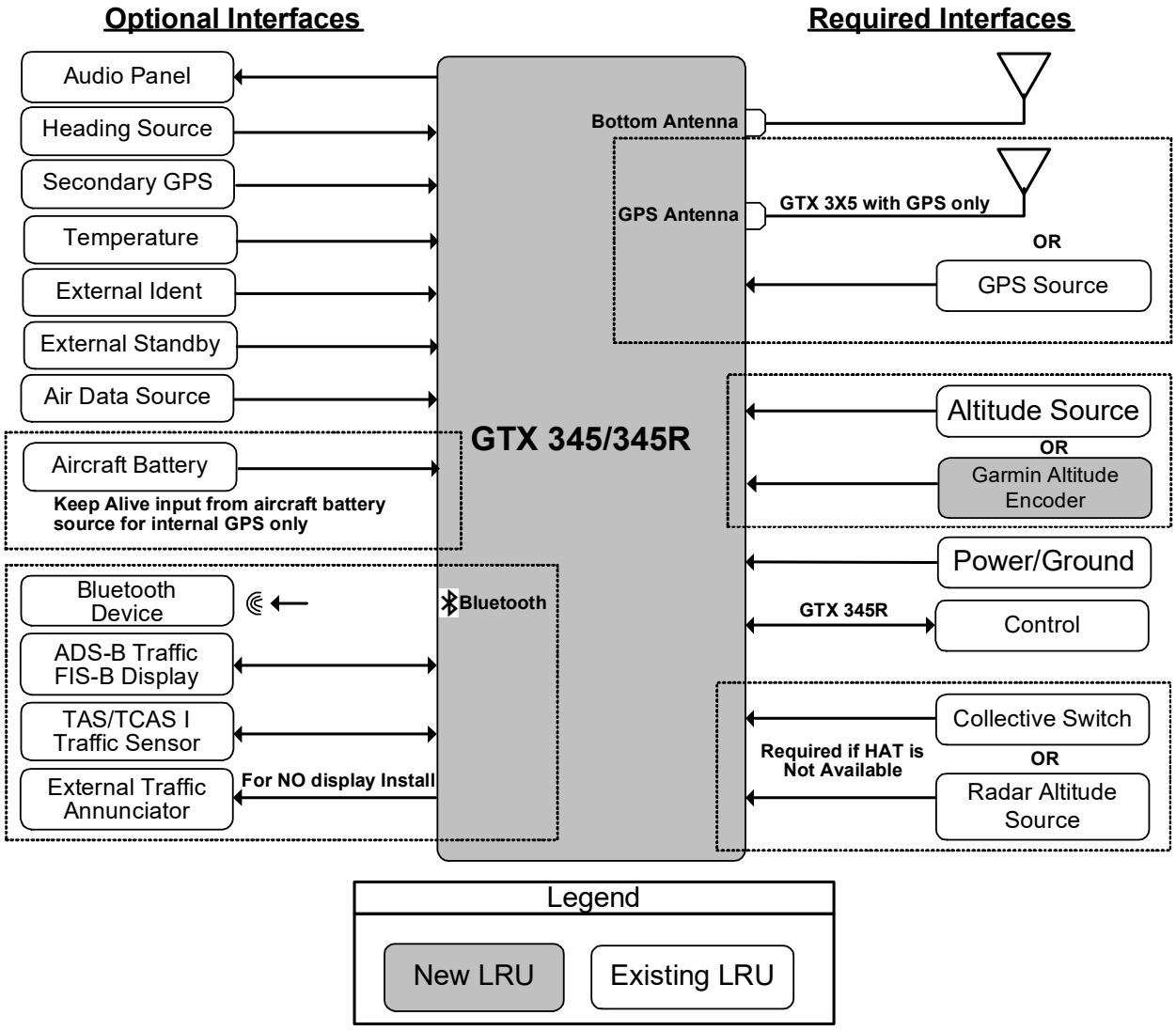

Figure 2-2 GTX 345 or GTX 345R Interface Summary

2.3 Electrical Load Information

Table 2-1 contains electrical load information for the GTX. Circuit protection for the GTX is located within the rotorcraft's avionics circuit protection and is labeled "XPDR." Appendix A contains details specific to the load changes for the installation.

Table 2-1 GTX Electrical Load

Unit	Characteristic	Specification	
		14 VDC	28 VDC
GTX 335	Input current, typical	0.57 A	0.29 A
	Input current, maximum	0.86 A	0.43 A
GTX 335, GPS	Input current, typical	0.72 A	0.36 A
	Input current, maximum	1.22 A	0.61 A
GTX 345	Input current, typical	0.72 A	0.36 A
	Input current, maximum	1.30 A	0.65 A
GTX 345, GPS	Input current, typical	1.07 A	0.54 A
	Input current, maximum	1.43 A	0.72 A
GTX 335/345, GPS	Input current, GPS KEEP ALIVE	65 µA typical	20 µA typical
		85 µA maximum	40 µA maximum

2.4 Weight and Balance

Update the rotorcraft Equipment List to indicate any items that are added, removed, or relocated. Each change must include the date and the name and certificate number of the person making the entry. Table 2-2 contains equipment weights.

Table 2-2 Equipment Weights

Kit P/N	Description	Weight (lbs/kg)
010-01214-01	GTX 335 Panel Mount	2.8 / 1.27
010-01214-21	GTX 335 NV Panel Mount	2.8 / 1.27
010-01214-41	GTX 335 GPS Panel Mount	2.9 / 1.32
010-01214-43		
010-01216-01	GTX 345 Panel Mount	3.1 / 1.41
010-01216-06		
010-01216-08		
010-01216-21	GTX 345 NV Panel Mount	3.1 / 1.41
010-01216-26		
010-01216-41	GTX 345 GPS Panel Mount	3.2 / 1.45
010-01216-46		
010-01216-61	GTX 345 NV GPS Panel Mount	3.2 / 1.45
010-01216-66		
010-01215-01	GTX 335 Remote	2.5 / 1.13
010-01215-06		
010-01215-41	GTX 335 GPS Remote	2.7 / 1.22
010-01217-01	GTX 345 Remote	2.9 / 1.32
010-01217-06		
010-01217-0B		
010-01217-41	GTX 345 GPS Remote	3.0 / 1.36
010-01217-46		
010-01215-02	GTX 335 Remote, Vertical Mount	3.0 / 1.35
010-01215-42	GTX 335 GPS Remote, Vertical Mount	3.1 / 1.42
010-01217-02	GTX 345 Remote, Vertical Mount	3.3 / 1.51
010-01217-07		
010-01217-42	GTX 345 GPS Remote, Vertical Mount	3.5 / 1.57
010-01217-47		

2.5 Unit Storage

The GTX 3X5 transponder unit is qualified for an operating temperature range of -55 ºC to +85 ºC. Recommended unit storage temperatures (uninstalled) are between 10 ºC and 35 ºC.

3 GTX CONTROL AND OPERATION

3.1 GTX 335/345 3-2
3.2 GTX 335R/345R 3-5
3.3 GTX 3X5 Install Tool 3-6
3.3.1 State Page 3-7
3.3.2 Status Page 3-8
3.3.3 Configuration Group 3-9
3.3.4 Diagnostics Group 3-10
3.3.5 Product Data Group 3-11
3.3.6 Software Upload Group 3-11

Control and operation of GTX 335/345 units occurs through the front panel of the GTX. Control and operation of remote-mounted GTX 335R/345R units is handled through the external interface provided via the GTN 6XX/7XX/Xi. ADS-B In information from the GTX 345 can be displayed through the external interface provided via the GTN 6XX/7XX/Xi or GNS 400W/500W series. Figure 3-2 and Figure 3-3 show the transponder control pages.

Important Codes

NOTE

The selected identification code must be entered carefully (either the one assigned by air traffic control for IFR flight or an applicable VFR transponder code).

1200 VFR code for any altitude in the US (refer to ICAO standards)

7000 VFR code commonly used in Europe (refer to ICAO standards)

7500 Hijack code (rotorcraft is subject to unlawful interference)

7600 Loss of communications

7700 Emergency

Avoid selecting code 7500 and all codes in the 7600-7777 range. These codes trigger special emergency alerts in ATC monitoring facilities. A rotorcraft's transponder code is used for ATC tracking purposes; therefore, be careful when making routine code changes.

3.1 GTX 335/345



Figure 3-1 GTX 335/345 Front Panel

Function Selection Keys

NOTE

If the transponder is in the ON or ALT operating mode, the transponder becomes an active part of the Air Traffic Control Radar Beacon System (ATCRBS). The transponder responds to interrogations from TCAS-equipped rotorcraft.

The function selection keys are:

OFF Powers off the GTX 3X5.

STBY Selects the Standby mode. Pressing the **STBY** key when the GTX 335/345 is powered off automatically powers the unit on in Standby mode. When in Standby mode, the transponder does not reply to interrogations (but new codes can be entered) and a "SBY" indication appears on the display.

ON Selects the On mode, which generates Mode A and Mode S replies, but Mode C altitude reporting is inhibited. Pressing the **ON** key when the GTX 335/345 is powered off automatically powers on the unit in Mode A and will transmit a squawk code when interrogated. ADS-B Out will not return barometric altitude as it switches to GPS altitude in this mode. Interrogations are indicated by the reply symbol (®). The replies do not include altitude information.

ALT Altitude mode is automatically selected when the rotorcraft becomes airborne using the unit's Air/Ground logic or when the **ALT** key is pressed. Pressing the **ALT** key when the GTX 335/345 is powered off automatically powers on the unit in Altitude Reporting mode. While the rotorcraft is on the ground and in ALT mode, the transponder does not allow Mode A and Mode C replies, but it does permit acquisition squitter and replies to Mode S interrogations.

While the rotorcraft is in ALT mode and airborne, it will generate Mode A, Mode C, and Mode S replies, as well as transmit acquisition and extended squitter, including ADS-B Out.

All transponder interrogations are indicated by the reply symbol (®).

IDENT Pressing the **IDENT** key activates the Special Position Identification (SPI) pulse for 18 seconds, identifying the transponder return from others on an air traffic controller's screen. During the IDENT period, the word "IDENT" appears in the upper-left corner of the display.

VFR Sets the transponder code to the pre-programmed VFR code selected in Configuration mode (set to 1200 at the factory). Pressing the **VFR** key again restores the previous identification code.

FUNC In Normal mode, pressing the **FUNC** key changes the subpage group shown on the right side of the display. Subpages include Flight ID, Pressure Altitude, Flight Time, Altitude Monitor, System Count Up, and Count Down Timers. In Configuration mode, it steps through the function pages.

ENT Confirms entry for selected item and moves the cursor to the next editable item, or function selection, in configuration and normal operation. Starts and stops the altitude monitor, count up, count down, and flight timers.

CRSR Selects changeable fields in configuration and normal operation. Initiates entry of the starting time for the count down timer and cancels transponder code entry. Holding the **CRSR** key during power-up will place the unit into a Ground Test mode that forces the rotorcraft into an airborne status for testing purposes.

CLR Resets the count up, count down, and flight timers. Cancels the previous key press during code selection, count down entry, or flight ID entry. Used in Configuration mode to scroll through the function pages.

8 Used as a scroll-up key to navigate through page groups in Normal and Configuration mode.

9 Used as a scroll-down key to navigate through page groups in Normal and Configuration mode.

Code Selection

Code selection is entered with eight keys (**0** through **7**) providing 4,096 active identification codes. Pushing one of these keys begins the code selection sequence. The new code is not activated until the fourth digit is entered. Pressing the **CLR** key moves the cursor back to the previous digit. Pressing the **CLR** key when the cursor is on the first digit of the code, or pressing the **CRSR** key during code entry, removes the cursor and cancels data entry, restoring the previous code. The numbers **8** and **9** are not used for code entry, only for flight ID entry, count down time, rotorcraft tail number entry, and data selection in Configuration and Normal mode.

Configuration Mode

To enter Configuration mode, press and hold the **ENT** key, then energize the unit. To exit Configuration mode, press and hold the **OFF** key until the unit de-energizes.

- To cycle through the pages, press the **FUNC** key
- To access items on the page, press the **CRSR** key
- To cycle through the selections of an item on the page, press the **8** or **9** key
- To scroll up or down on the page when nothing is selected, press the **8** or **9** key
- To move within the page, press the **ENT** key
- To move to previous selection on the page, press the **CLR** key
- To exit the page, press the **FUNC** key

GTX 3X5 units may also be configured using the GTX 3X5 Install Tool. For configuration using the GTX 3X5 Install Tool, refer to Section 3.3.

Function Display

FLIGHT ID	If Allow Pilot to Edit Flt ID is configured to *YES*, the flight ID can be changed by the pilot at any time in Normal mode. This allows the pilot/crew to enter the specific flight ID for transmission to ATC interrogations.
UP COUNTER	Timer controlled by **ENT** and **CLR** keys.
DOWN COUNTER	Timer controlled by **ENT**, **CLR**, and **CRSR** keys. The initial count down time is entered with the **0** through **9** keys.
FLIGHT TIMER	Displays the flight time, controlled by the **ENT** key or by one of four airborne sources (squat switch, GPS ground speed recognition, air data airspeed recognition, or altitude increase), as configured during installation. The timer begins when the GTX 3X5 determines that the rotorcraft is airborne.
TRIP TIMER	Timer controlled by **ENT** and **CLR** keys.
PRESSURE ALT	Displays the altitude data supplied to the GTX 3X5 in feet, hundreds of feet (flight level), or meters, depending on configuration.
ALT MONITOR	Controlled by **ENT** key. Activates a voice alarm and warning annunciator when altitude limit is exceeded.
SAT/DALT	Displayed when the GTX 3X5 is configured with temperature input. Displays Static Air Temperature and Density Altitude.
CONTRAST/OFFSET	Contrast is controlled by the **8** and **9** keys.
BACKLIGHT/OFFSET	This page is only displayed if photocell backlighting mode is selected in Configuration mode. Backlighting is controlled by the **8** and **9** keys.
MESSAGES	Alerts crew of transponder faults, fails, and advisory messages. **"**MSG" appears when a message is generated. **CRSR** and **ENT** keys access messages for acknowledgment and viewing.
BLUETOOTH	This page is only shown on the GTX 345 when configured for Bluetooth at installation. When selected, it allows PEDs to pair to the GTX 345 and device management to show ADS-B In data.
INTERNAL GPS	This page displays Lat/Long accuracy, number of connected satellites, horizontal figure of merit, whether the unit is using internal GPS, and overall status.
1090ES TX CTRL	This is only displayed when the unit is configured for 1090ES Out Control in Configuration mode to be *Pilot Set*. Once configured, this can be highlighted by the **CRSR** key, changed by the **8** and **9** keys, and selected by **ENT** key. Turns the extended squitter function on or off.

3.2 GTX 335R/345R

Figure 3-2 and Figure 3-3 show the GTX control pages associated with the GTN 6XX/7XX/Xi. Refer to the specific pilot's guide and cockpit reference guide for details regarding control and function. Part numbers for these documents are listed in Table 1-1.



Figure 3-2 GTN 7XX Transponder Control



Figure 3-3 GTN 6XX Transponder Control

3.3 GTX 3X5 Install Tool

NOTE

If the GTX 3X5/3X5R is configured to interface with a display control unit, the display control unit must be turned off or in Configuration mode prior to running the GTX 3X5 Install Tool.

NOTE

The GTX 3X5 Install Tool pages shown within this manual reflect GTX 3X5 Install Tool version 2.05. Some differences in operation may be observed when comparing information in this manual to later versions of the install tool.

The GTX 3X5 Install Tool is available for download from the Garmin Dealer Resource Center. The GTX 3X5 Install Tool requires a computer with available USB 2.0 ports and Microsoft Windows XP or later.

A USB A-to-B cable is required to interface between a computer and the GTX 3X5/3X5R. For additional details, refer to Figure 3-4. To use the GTX 3X5 Install Tool:

1. Remove power from the GTX 3X5/3X5R.
2. Remove power from the display control unit or verify it is in Configuration mode.
3. Connect the USB cable between the GTX 3X5 and the computer.
4. Energize the GTX 3X5/3X5R and run the GTX 3X5 Install Tool.

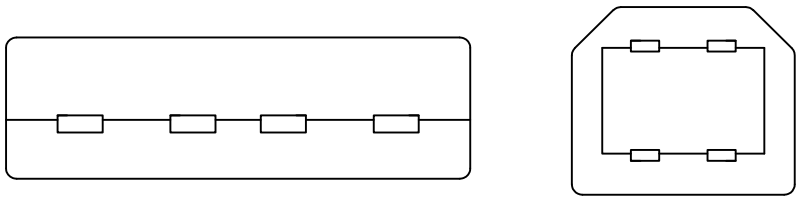

Figure 3-4 USB A and USB B Connectors

The install tool is used to check equipment status, load software, and configure the unit.

To place a GTX 3X5/3X5R unit in Configuration mode:

1. In the Unit Mode window, change “Normal Mode” to “Configuration Mode.”
2. Click the **Set** key.

Green boxes indicate a function operating correctly. Red boxes indicate a failure. Yellow boxes indicate a fault or warning. Gray boxes indicate the presence of a message.

The bottom of the install tool displays unit information, such as software version, connection status, and unit mode. The tool will annunciate if alerts, faults, failures, or warnings exist. The menu bar at the top of the install tool has a **GTX** key and a **Help** key. The **GTX** key provides the following options:

- Save configuration
- Load configuration
- Reset configuration
- Push configuration from install tool to configuration module
- Exit

The **Help** key provides the following information:

- Part number
- Version number
- Copyright statement
- Software license agreements

3.3.1 State Page

The ***State*** page of the GTX 3X5 Install Tool reports the current mode of the GTX 3X5/3X5R, Flight ID, Squawk Code, and Pressure Altitude. Mode selections include Ground Test and Traffic Test modes. Standby and Operate test modes are also provided for TCAS.

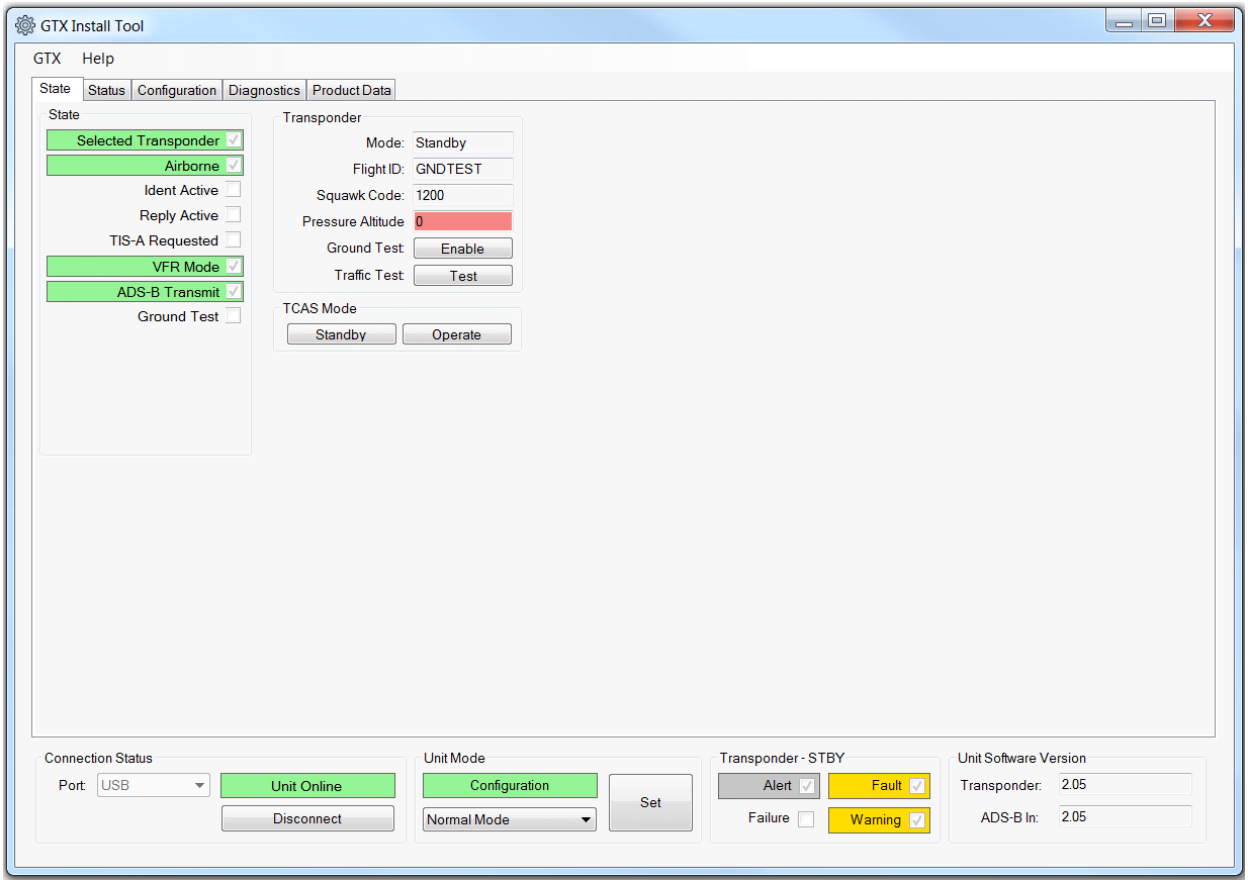

Figure 3-5 GTX 3X5/3X5R State Page

3.3.2 Status Page

The ***Status*** page reports failures, faults, warnings, and pilot alerts. Information such as whether there is a configuration module present is also displayed.

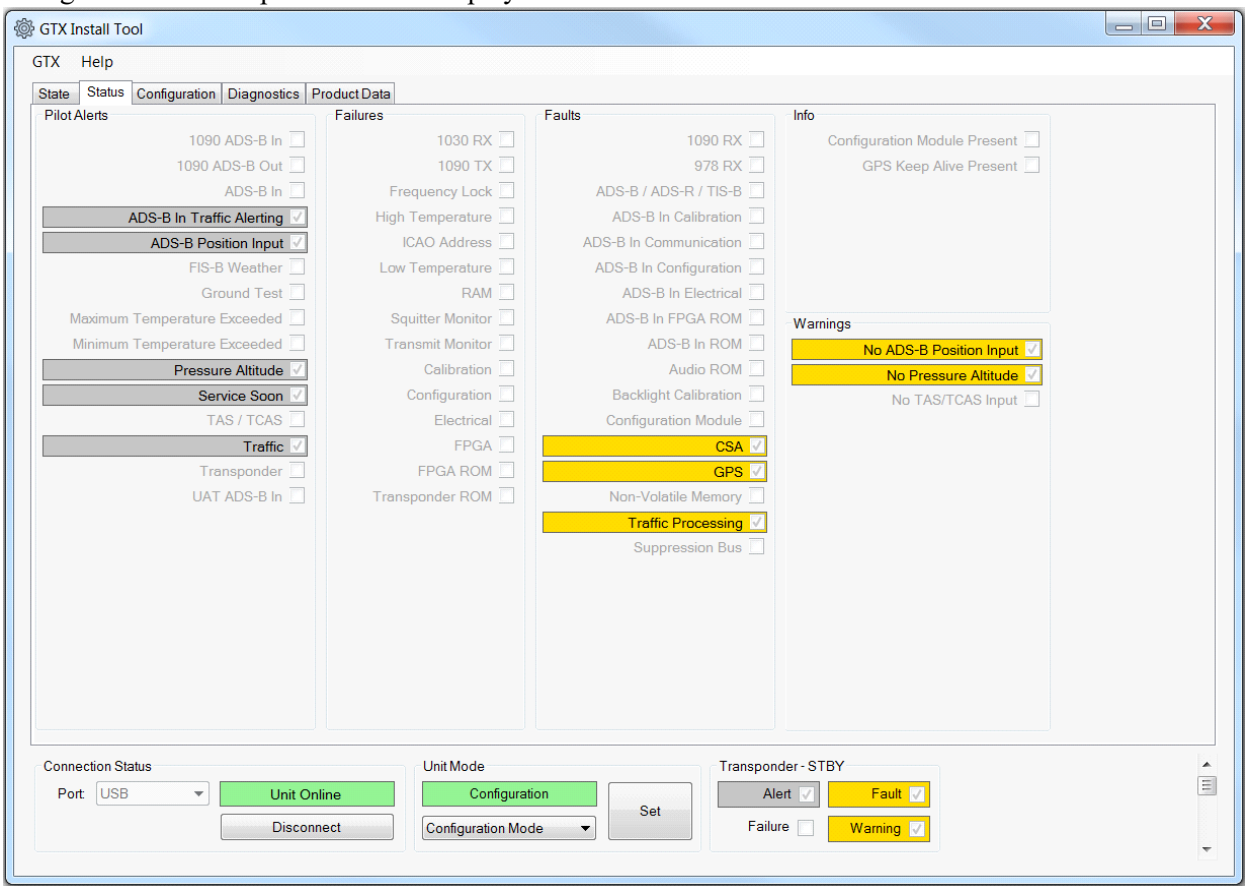

Figure 3-6 GTX 3X5/3X5R Status Page

3.3.3 Configuration Group

The Configuration group contains the following pages:

- ***Aircraft*** page – allows the configuration of basic aircraft configuration and flight ID settings
- ***Airframe*** page – allows the configuration of basic airframe configuration and operational options settings
- ***Unit*** page – allows the configuration of identification code, unit options, and display options
- ***Interfaces*** page – allows the configuration of serial, A429, discretes, and HSDB settings
- ***Sensors*** page – allows the configuration of Garmin Altitude Encoder, GPS, internal AHRS, and additional sensors
- ***Audio*** page – allows the configuration of audio options and alerts
- ***Display*** page – allows the configuration of display and key backlight, photocell and lighting bus curves, and default offsets

NOTE

All configurable settings must match the GTX System Configuration Log retained in the rotorcraft permanent records.

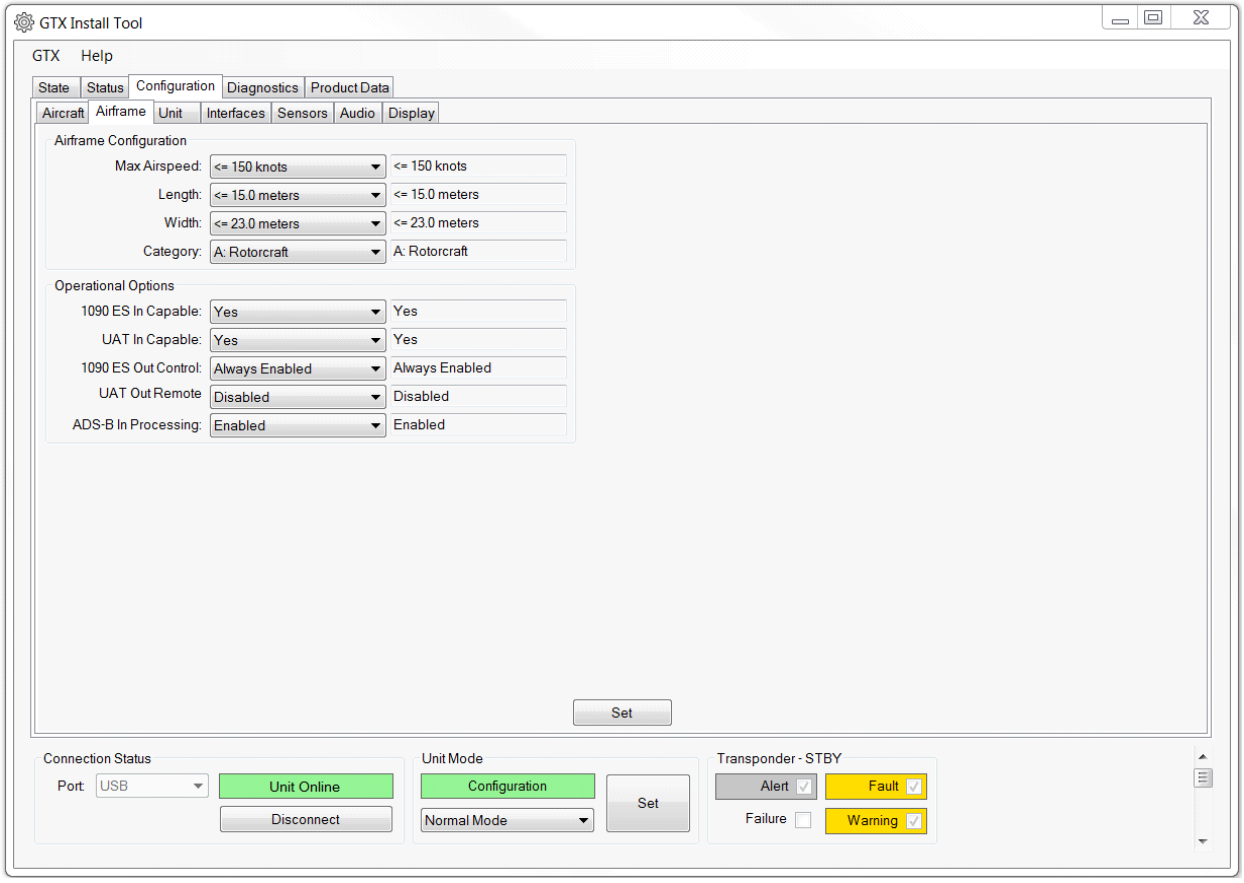

Figure 3-7 GTX 3X5/3X5R Configuration Group

3.3.4 Diagnostics Group

NOTE

GTX 3X5/3X5R must be in Configuration mode to view connection status or get assert log.

The Diagnostics group contains the following pages:

- ***DAP*** page – reports the status of the necessary data supporting ADS-B requirements
- ***Discretes*** page – reports the status of discrete inputs, outputs, and allows the user to override the output pins for testing purposes
- ***Connection Status*** page – reports the status of A429 inputs, serial inputs, and HSDB
- ***Internal GPS*** page – reports GPS acquisition status and signal strength
- ***Bluetooth*** page – reports Bluetooth receiver status and paired devices
- ***Assert Log*** page – provides the ability to download assert log for system troubleshooting

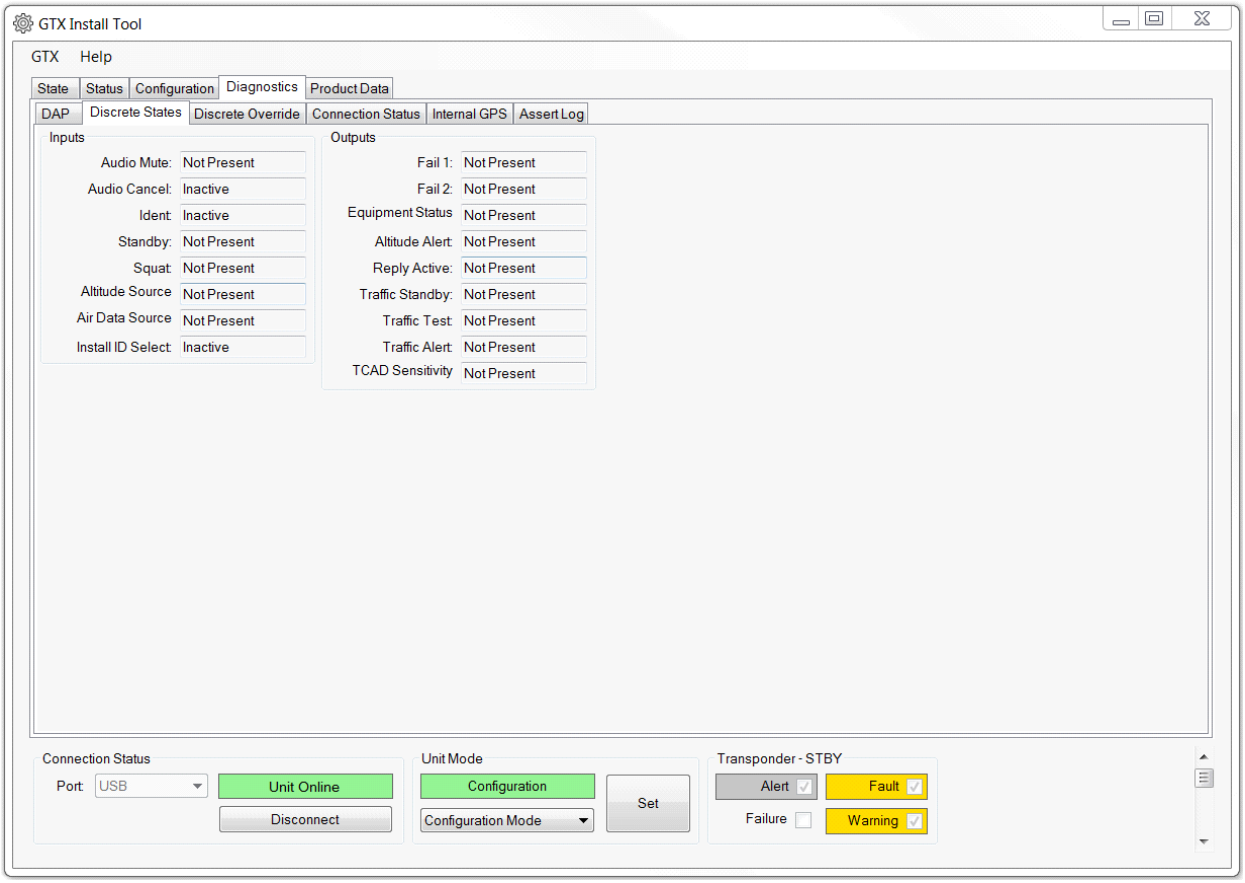

Figure 3-8 GTX 3X5/3X5R Diagnostics Group

3.3.5 Product Data Group

The product data group provides the following pages.

- ***Transponder*** page – displays basic system, FPGA, boot block, and audio database information
- ***ADS-B In*** page – displays basic system, FPGA, and boot block information
- ***GPS*** page – displays GPS and GPS loader information
- ***Garmin Altitude Encoder*** page – displays the altitude encoder serial number
- ***Configuration*** page – displays the configuration status of aircraft, unit, wiring, and display CRCs

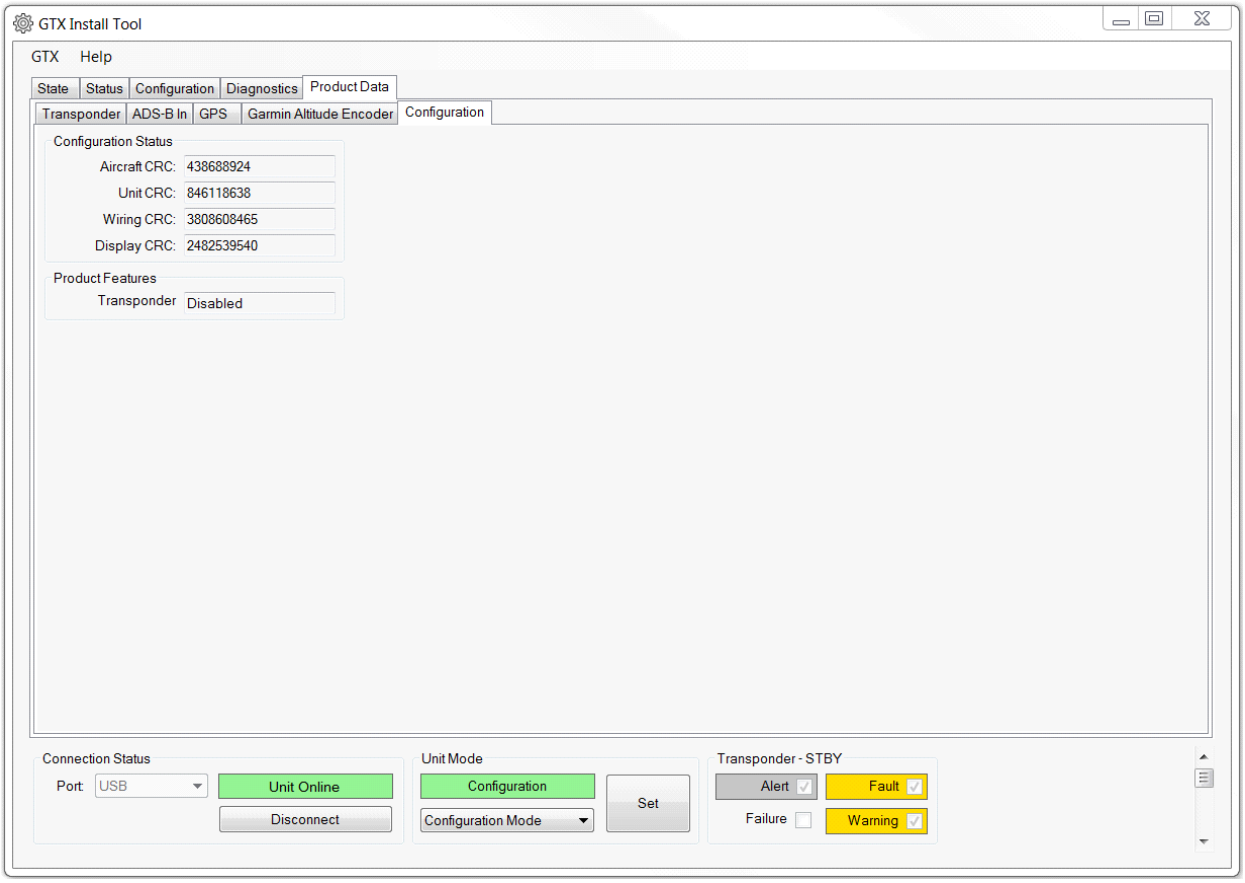

Figure 3-9 GTX 3X5/3X5R Product Data Group

3.3.6 Software Upload Group

Allows GTX 3X5/3X5R software updates. Refer to Section 7.2 for details.

4 INSTRUCTIONS FOR CONTINUED AIRWORTHINESS

4.1 Applicability 4-2
4.2 Airworthiness Limitations 4-3
4.3 Servicing Information 4-4
4.3.1 On Condition Servicing 4-4
4.3.2 Special Tools 4-4
4.4 Maintenance/Inspection Intervals 4-5
4.5 Visual Inspection 4-6
4.5.1 GTX 335/345 Visual Inspection 4-6
4.5.2 GTX 335R/345R Visual Inspection 4-7
4.5.3 Antenna Visual Inspection 4-7
4.5.4 Post-Lightning Strike Inspection 4-8
4.5.5 Post-Hard Landing Inspection 4-8
4.6 Electrical Bonding Test 4-9
4.7 Additional Instructions 4-9

This section provides Instructions for Continued Airworthiness for the GTX 3X5 with ADS-B installation. This section satisfies the requirements for continued airworthiness as defined by 14 CFR Part 27.1529 and Part 27 Appendix A. Procedures and practices defined in this section are required to maintain the continued airworthiness of the GTX 3X5 as installed per STC SR02124SE.

4.1 Applicability

This document applies to all rotorcraft equipped with GTX 3X5 units with ADS-B per STC SR02124SE.

Modification of a rotorcraft by this Supplemental Type Certificate (STC) obligates the helicopter operator to implement the specific maintenance practices and/or airworthiness limitations provided in this document. This is in addition to the rotorcraft's existing approved maintenance, inspection, and airworthiness limitations programs.

Appendix Sections A.1 through A.6 must be filled out by the installer, included as part of FAA Form 337, and filed with the rotorcraft's permanent records. These appendices document GTX 3X5 installation details that are essential to system maintenance and are a part of the rotorcraft Instructions for Continued Airworthiness. These include:

- General rotorcraft and GTX transponder specific information
- Electrical Load Analysis
- Equipment connected to the installed GTX transponder
- Configuration log of the installed GTX transponder(s) (a printout of the GTX 3X5 configuration from the GTX 3X5 Installation Tool is also acceptable)
- Location of the GTX 3X5 transponder and connected antenna(s) as installed in the rotorcraft, including all wire routing

4.2 Airworthiness Limitations

There are no new (or additional) airworthiness limitations associated with this equipment and/or installation.

The Airworthiness Limitations section is FAA approved and specifies inspections and other maintenance required under Secs. 43.16 and 91.403 of the Federal Aviation Regulations unless an alternative program has been FAA approved.

Erik Frisk 13-OCT-2022

FAA APPROVED

Erik Frisk
ODA STC Unit Administrator
ODA-240087-CE

Date

4.3 Servicing Information

GTX 3X5 LRU maintenance is “on condition” only.

4.3.1 On Condition Servicing

Servicing or replacement may be required if the GTX 3X5/3X5R exhibits symptoms, failures, or alerts as described in this manual.

4.3.2 Special Tools

The following tools are required to perform the tasks described in this manual:

- Calibrated milliohm meter with an accuracy of ±0.1 mΩ or better
- Calibrated transponder ramp tester
- Calibrated pitot-static ramp tester
- GTX 3X5 Install Tool
- 50 Ω 5 watt antenna load

4.4 Maintenance/Inspection Intervals

NOTE

The intervals listed in the table below must be adhered to for each installed GTX.

Table 4-1 shows systems and components, installed by this STC that must undergo tests or checks at specific intervals. The inspections based on calendar elapsed time have specifically-stated intervals.

Table 4-1 Maintenance/Inspection Intervals

Item	Description/Procedure	Section	Interval
Equipment removal and re-installation	Removal and re-installation of GTX LRUs.	6	On Condition
Cleaning	The GTX 335/345 display and bezel may be cleaned periodically. Cleaning is accomplished using a soft cotton cloth dampened with clean water. **Do not** use any chemical cleaning agents. Avoid scratching the surface of the display.	N/A	On Condition
Antenna visual inspection	Removal and replacement.	4.5	On Condition
Lightning strike - actual or suspected	Inspect the coaxial cable connections, GTX bonding hardware (including bonding straps and tape), antenna, and surrounding areas.	4.5	On Condition
	The GTX 3X5 receiver sensitivity must be tested and shown to comply with Title 14 CFR Part 43 Appendix F.	8.4.2	On Condition
Testing	The GTX 3X5 must be tested and shown to comply with Title 14 CFR Part 91.227.	8.4.3	Replacement of GPS Position source(s)
Equipment visual inspection	A visual inspection of the equipment installed by this STC must be performed.	4.5	12 Calendar Months
Testing	The GTX 3X5 must be tested and shown to comply with Title 14 CFR Part 91.411, 91.413, and Part 43 Appendices E and F.	8.4.2	Refer to Title 14 CFR Part 91.411, 91.413, and Part 43 Appendices E and F
Electrical bonding test	An electrical bonding test must be performed on equipment installed by this STC.	4.6	10 Years or 2000 hours
Hard landing	Inspect the GTX, mounting rack, and rotorcraft structure.	4.5.5	On Condition

4.5 Visual Inspection

Perform a visual inspection in accordance with requirements in this section. Check for corrosion, damage, or other defects for each of the installed items. Replace any damaged parts as required. Inspection may require temporary removal of a unit or units to gain access to connectors. For equipment removal and replacement, refer to Section 6. For equipment locations, refer to Appendix A. For instructions on removing access panels, consult the specific rotorcraft maintenance manual.

4.5.1 GTX 335/345 Visual Inspection

During normal rotorcraft inspections, but not to exceed 12 calendar month intervals, conduct a visual inspection of the GTX 335/345 installation in the following locations:

Instrument Panel or Console

1. Inspect all GTX 335/345 keys for legibility of labels and markings.
2. Inspect GTX 335/345 unit(s) for security of attachment.
3. Inspect GAE (if installed) for security of attachment.
4. Inspect GTX rack and fasteners for integrity.
   a. The racks, fasteners, and support structure must be in good condition and the fasteners secured properly.
   b. There must be no corrosion.
5. Inspect any bonding straps for corrosion, loose connections, or signs of damage. Refer to Appendix B for details.
6. Inspect the condition of the wiring harnesses and coaxial cables.
   a. Inspect all GTX and adjacent wiring and coax for chafing, damage, proper routing of wire bundles, and security of attachment in accordance with AC 43.13-1B, Chapter 11, Section 8, paragraph 11-96. Pay particular attention to possible areas of chafing.
   b. Verify that the GTX and adjacent wiring show no signs of cracking, chafing, abrasion, melting, or any other form of damage.
   c. Inspect the GTX rack and LRU connectors for corrosion or other defects. Check the integrity of the shield block ground attachments to the harness connector assembly, as well as the integrity of the individual shields and their attachment.

4.5.2 GTX 335R/345R Visual Inspection

During normal rotorcraft inspections, but not to exceed 12 calendar month intervals, conduct a visual inspection of the GTX 335R/345R installation in the following locations:

Remote Mount Rack

1. Inspect GTX 335R/345R unit(s) for security of attachment.
2. Inspect GAE (if installed) for security of attachment.
3. Inspect GTX rack and fasteners for integrity.
   a. The racks, fasteners, and support structure must be in good condition and the fasteners properly secured.
   b. There must be no corrosion.
   c. For a composite shelf, aluminum foil tape used to ground the GTX must not be torn, damaged, or corroded. If any of these occur, the tape must be replaced. Refer to Appendix B for details.
4. Inspect any bonding straps for corrosion, loose connections, or signs of damage. Refer to Appendix B for details.
5. Inspect the condition of the wiring harnesses and coaxial cables.
   a. Verify that all GTX wiring and cables are securely fastened.
   b. Verify that the GTX and adjacent wiring show no signs of cracking, chaffing, abrasion, melting, or any other form of damage.
   c. Inspect the GTX rack and LRU connectors for corrosion or other defects. Check the integrity of the shield block ground attachments to the harness connector assembly, as well as the integrity of the individual shields and their attachment.

4.5.3 Antenna Visual Inspection

During normal rotorcraft inspection, but not to exceed 12 calendar months, visually inspect the transponder antenna(s) for the following:

1. Erosion of the antenna blade leading edge, cracks, dents, or other physical damage. If any of these conditions are present, the antenna must be replaced. For antenna replacement details, refer to the antenna manufacturer's instructions.
2. Secure attachment of the antenna to the rotorcraft structure. If the attachment is not secure, re-work the installation and complete the electrical bonding test, as described in the applicable antenna installation instructions.
3. Condition of the environmental seal at the base of the antenna. A damaged or compromised seal must be replaced and the electrical bonding tested, as described in the applicable antenna installation instructions.

4.5.4 Post-Lightning Strike Inspection

An inspection must be performed following a suspected or actual lightning strike to antennas or any sensor(s) connected to the GTX unit. The antenna, sensor, and rotorcraft structure to which they are mounted must be inspected for physical damage, particularly the location(s) where lightning may have attached. If visible physical damage is present, the antenna and sensor must be replaced.

The coax cable connecting the antenna to the GTX unit must be inspected, including grounding fasteners, bonding straps, or aluminum tape. The rotorcraft structure supporting the installation of the remotely mounted GTX must be inspected to verify that no physical damage has occurred. If damaged, the structure must be repaired in accordance with the model-specific rotorcraft structural repair manual or the rotorcraft manufacturer's instructions. Damaged components must be replaced, followed by completion of the electrical bonding test described in Section 4.6.

4.5.5 Post-Hard Landing Inspection

An inspection must be performed following a hard landing. The GTX, mounting rack, and rotorcraft structure to which they are mounted must be inspected for physical damage, particularly the location(s) of the mounting hardware. If visible physical damage is present, the GTX, mounting rack, and rotorcraft structure must be replaced or repaired in accordance with the model-specific rotorcraft structural repair manual or the rotorcraft manufacturer's instructions. Any component repair or replacement must be followed by completion of the electrical bonding test described in Section 4.6.

4.6 Electrical Bonding Test

1. Disconnect all connectors from the GTX 3X5. This includes the antenna coaxial cable.
2. Measure the DC resistance between the aircraft ground and the metal case of the GTX 3X5. Verify that the resistance is less than or equal to 10 mΩ.

NOTE

Any grounding straps or aluminum foil added as part of the GTX 3X5 installation for grounding the GTX to the airframe ground must be included in the measurement.

3. If the resistance is more than 10 mΩ, the electrical bond must be improved such that the direct current resistance, when measured with a 4-wire meter, is less than or equal to 2.5 mΩ. For instructions on how to create a new electrical bond, refer to Appendix B.

4.7 Additional Instructions

Electrical load information for the GTX is provided in Section 2.3.

5 TROUBLESHOOTING

5.1 GTX General Troubleshooting 5-2
5.2 GTX Failure Annunciations 5-4
5.3 Connector Pinout Information 5-14
5.3.1 GTX 3X5 5-14
5.3.2 Altitude Functions 5-17
5.3.3 Discrete Functions 5-18
5.3.4 RS-232 Input/Output 5-20
5.3.5 ARINC 429 Input/Output 5-20
5.3.6 RS-422 Out 5-20
5.3.7 HSDB Input/Output 5-21

5.1 GTX General Troubleshooting

This section provides information to assist troubleshooting if problems occur after completing maintenance. Refer to the GTX System Configuration Log retained in the rotorcraft permanent records for a list of the interfaced equipment and system configuration data. When troubleshooting the GTX, refer to the wire routing drawings and interconnect wiring diagrams that are retained in the rotorcraft permanent records.

The following diagram describes possible symptoms associated with the Garmin transponders and provides corresponding actions for troubleshooting.

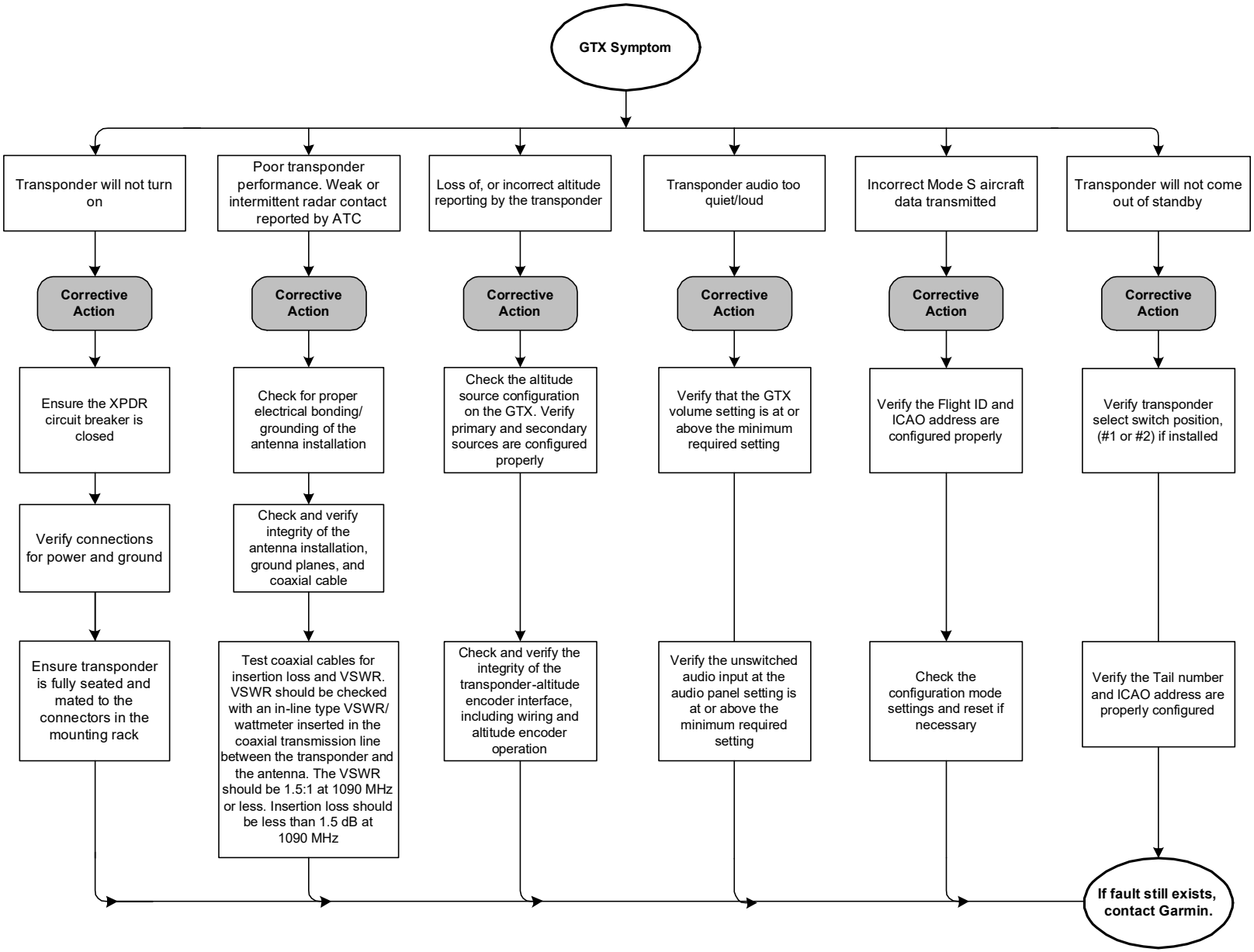

Figure 5-1 GTX Transponder Troubleshooting (All Models)

5.2 GTX Failure Annunciations

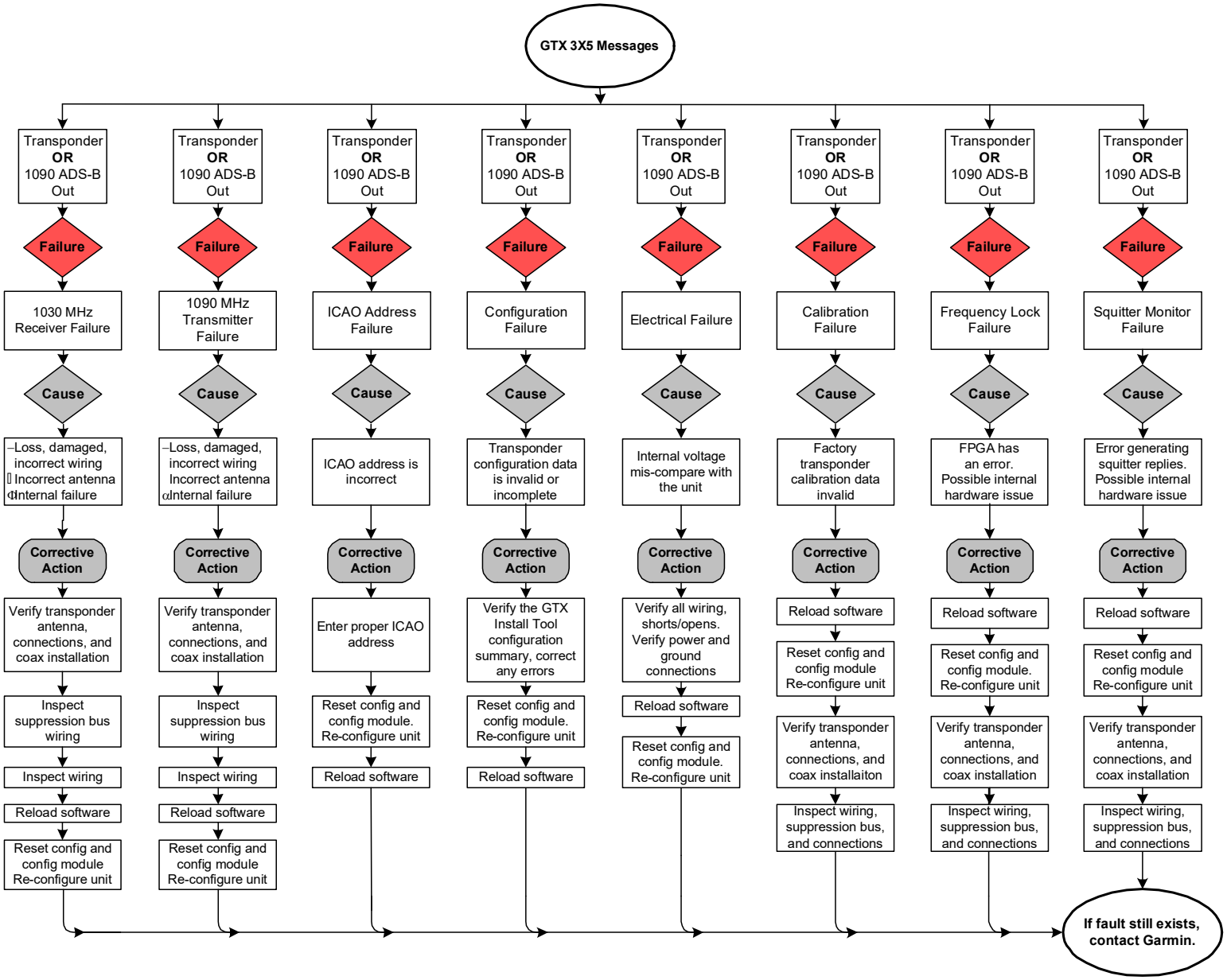

Figure 5-2 GTX 3X5 Transponder Alerts
Sheet 1 of 5

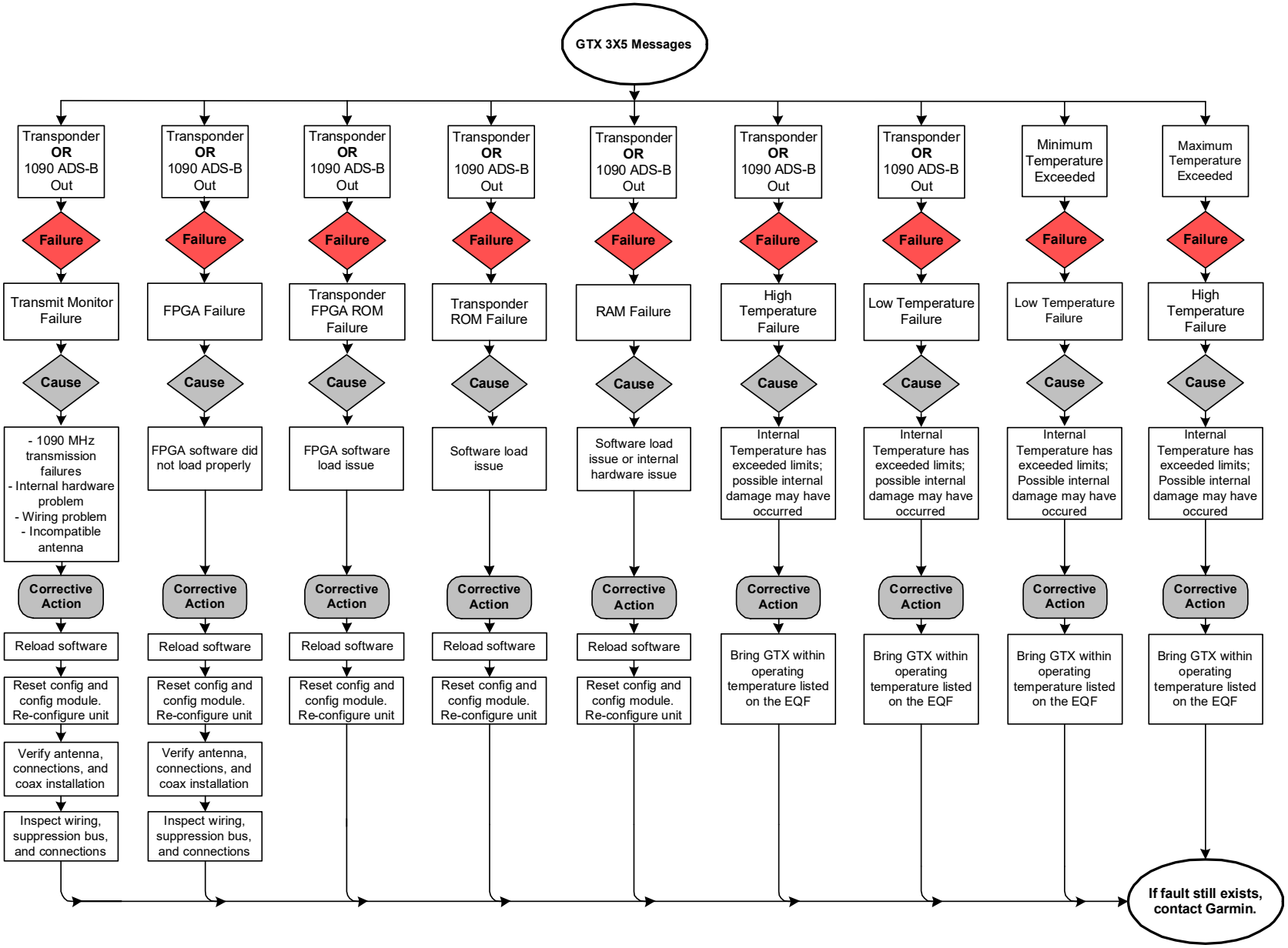

Figure 5-2 GTX 3X5 Transponder Alerts
Sheet 2 of 5

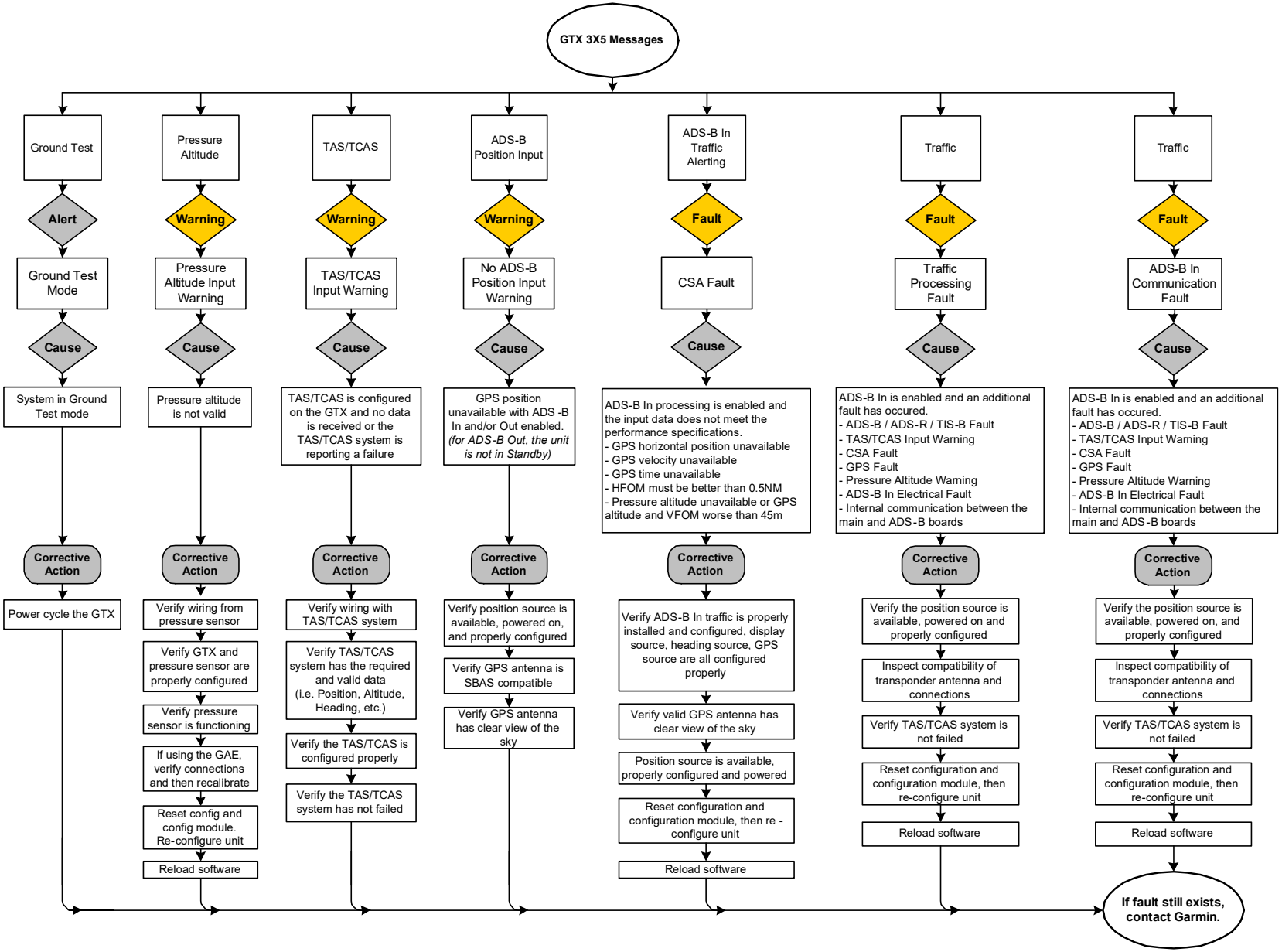

Figure 5-2 GTX 3X5 Transponder Alerts
Sheet 3 of 5

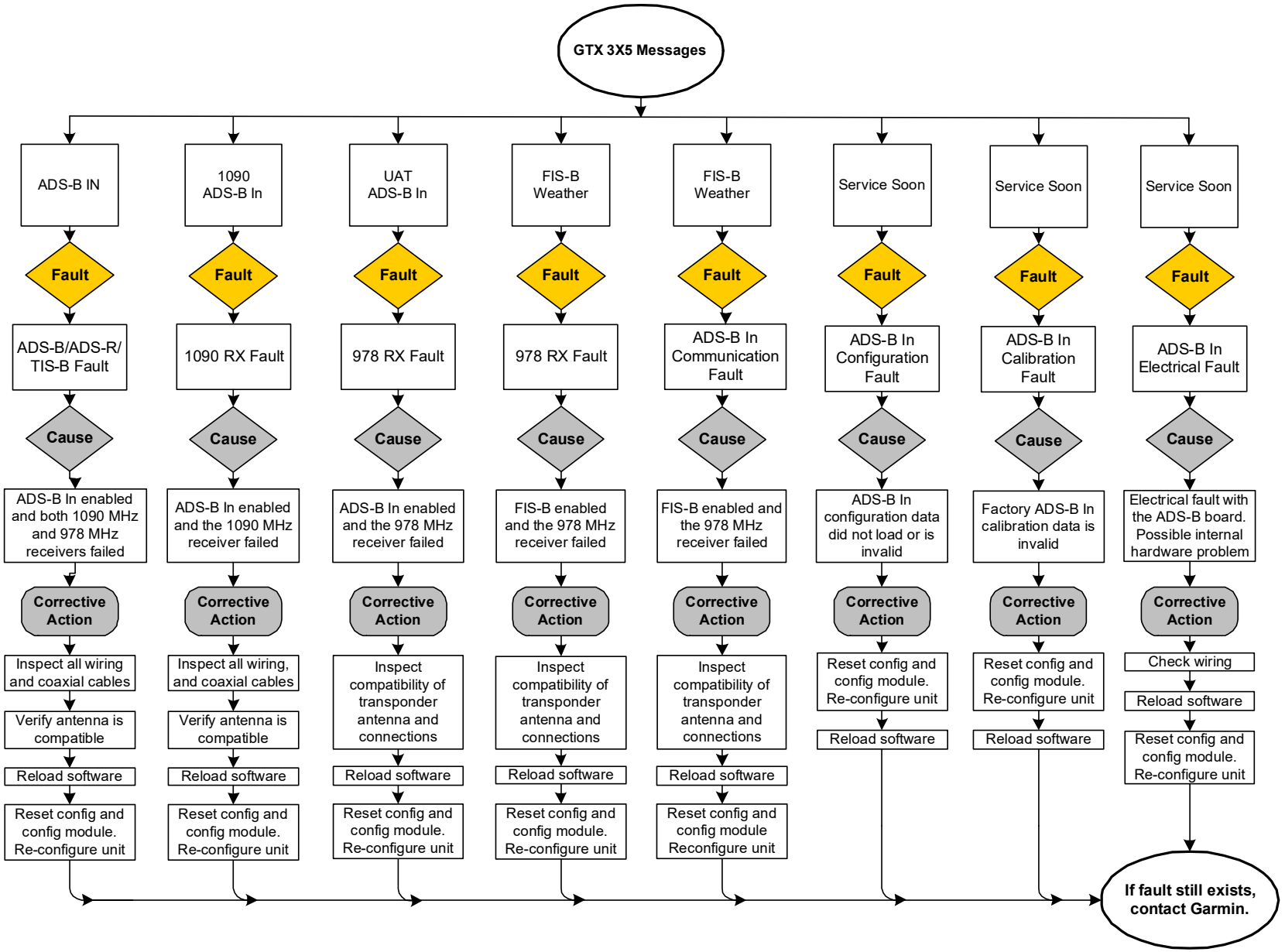

Figure 5-2 GTX 3X5 Transponder Alerts
Sheet 4 of 5

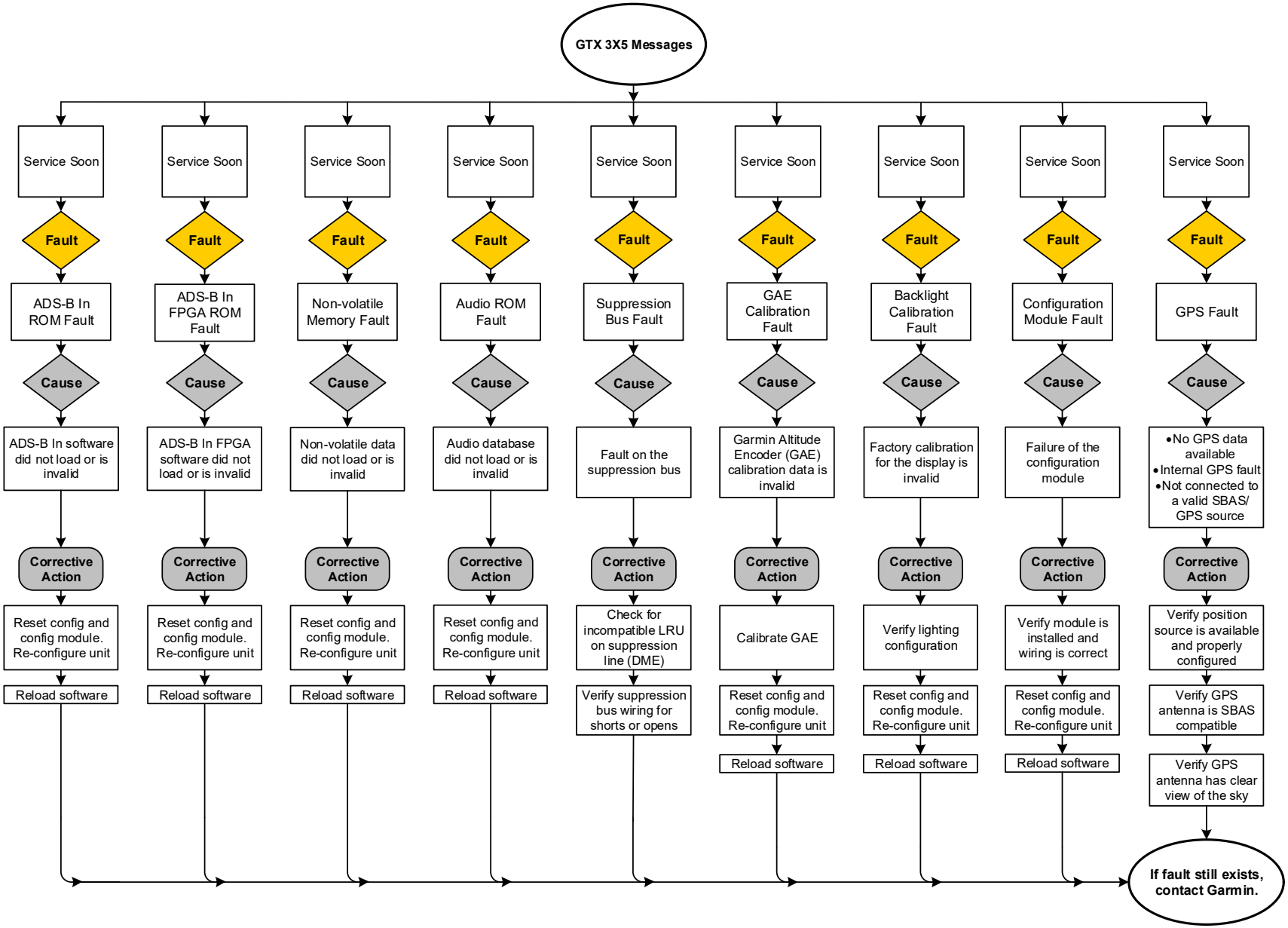

Figure 5-2 GTX 3X5 Transponder Alerts
Sheet 5 of 5

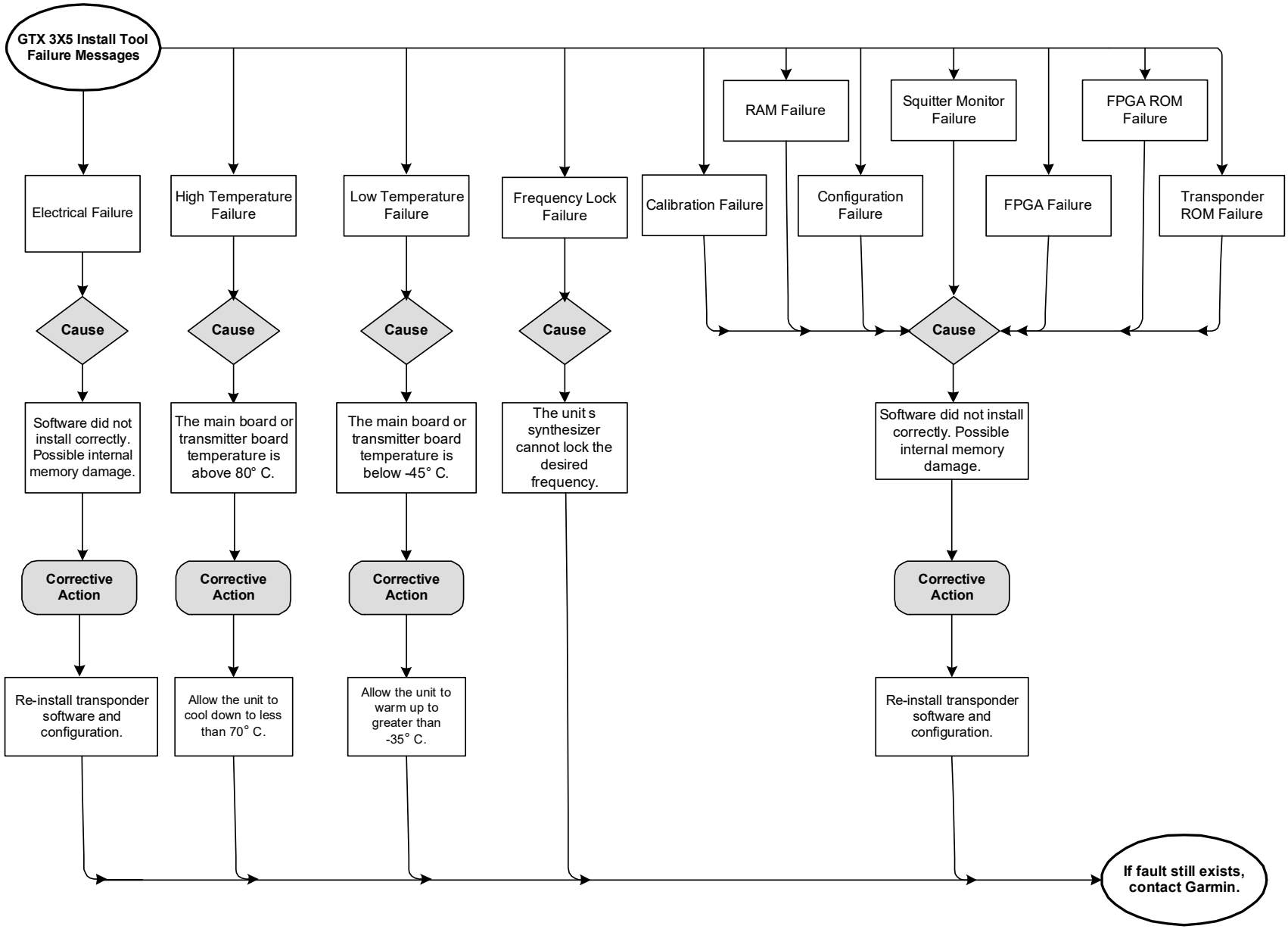

Figure 5-3 GTX 3X5 Install Tool Failure/Fault Messages
Sheet 1 of 5

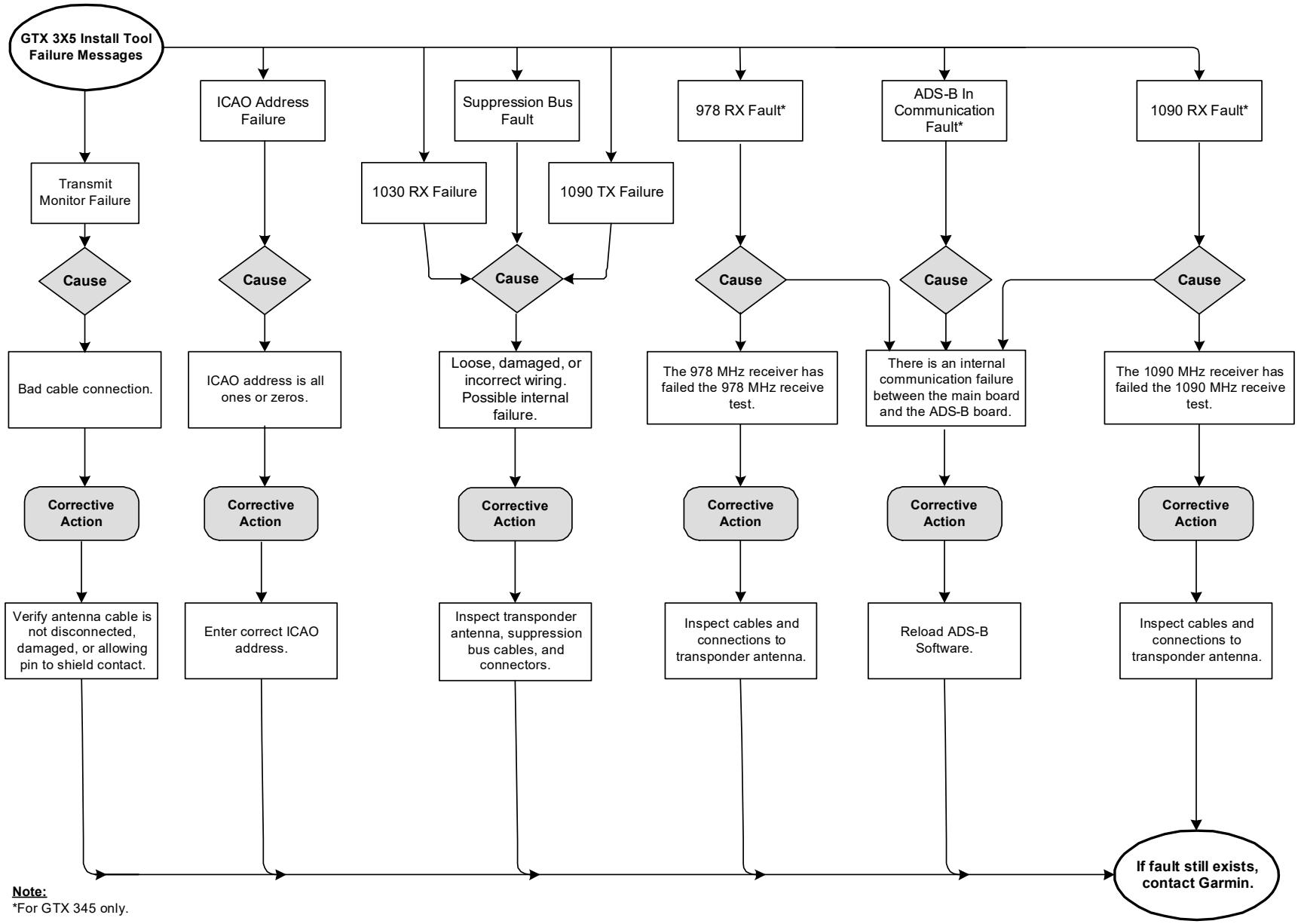

Figure 5-3 GTX 3X5 Install Tool Failure/Fault Messages
Sheet 2 of 5

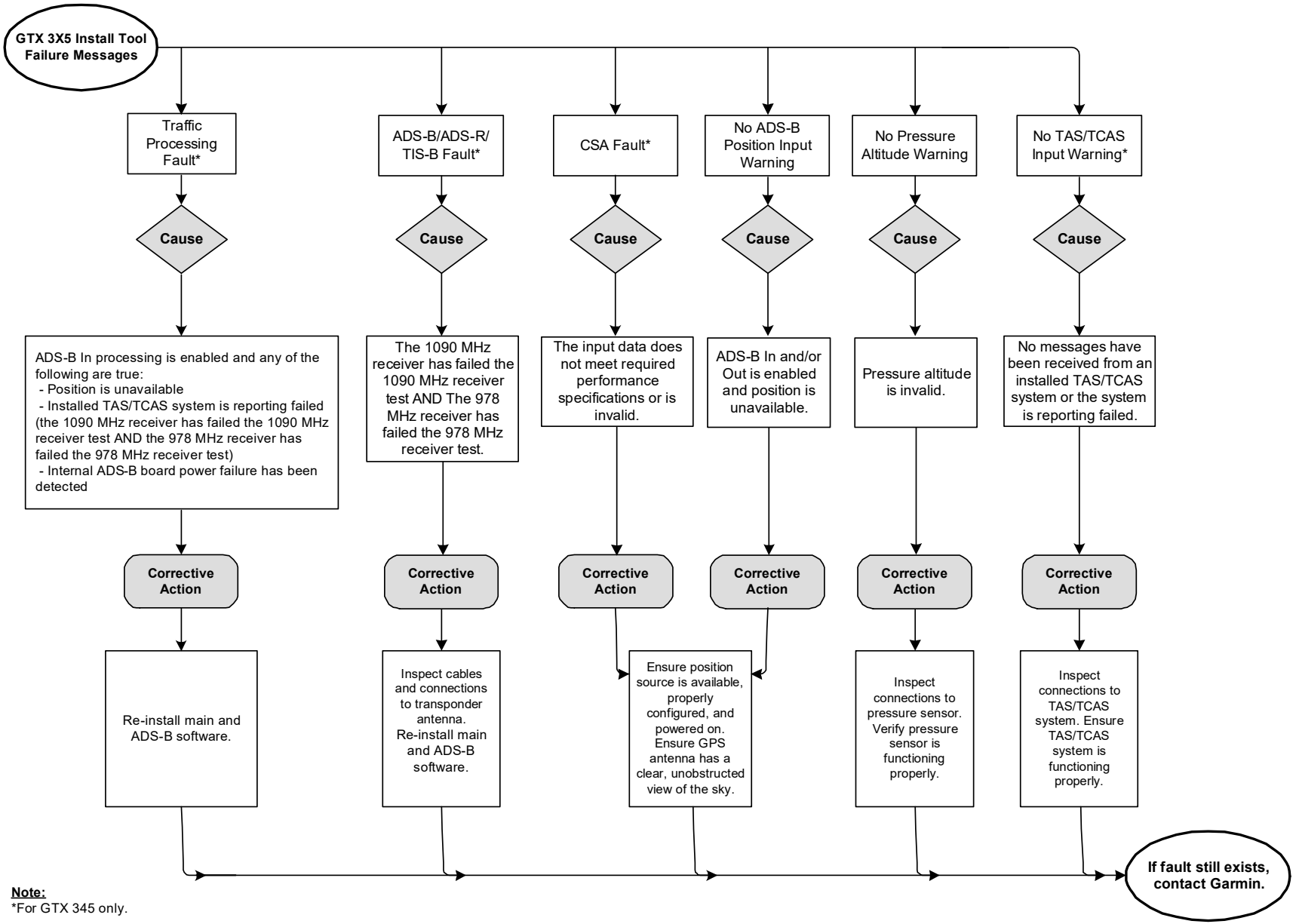

Figure 5-3 GTX 3X5 Install Tool Failure/Fault Messages
Sheet 3 of 5

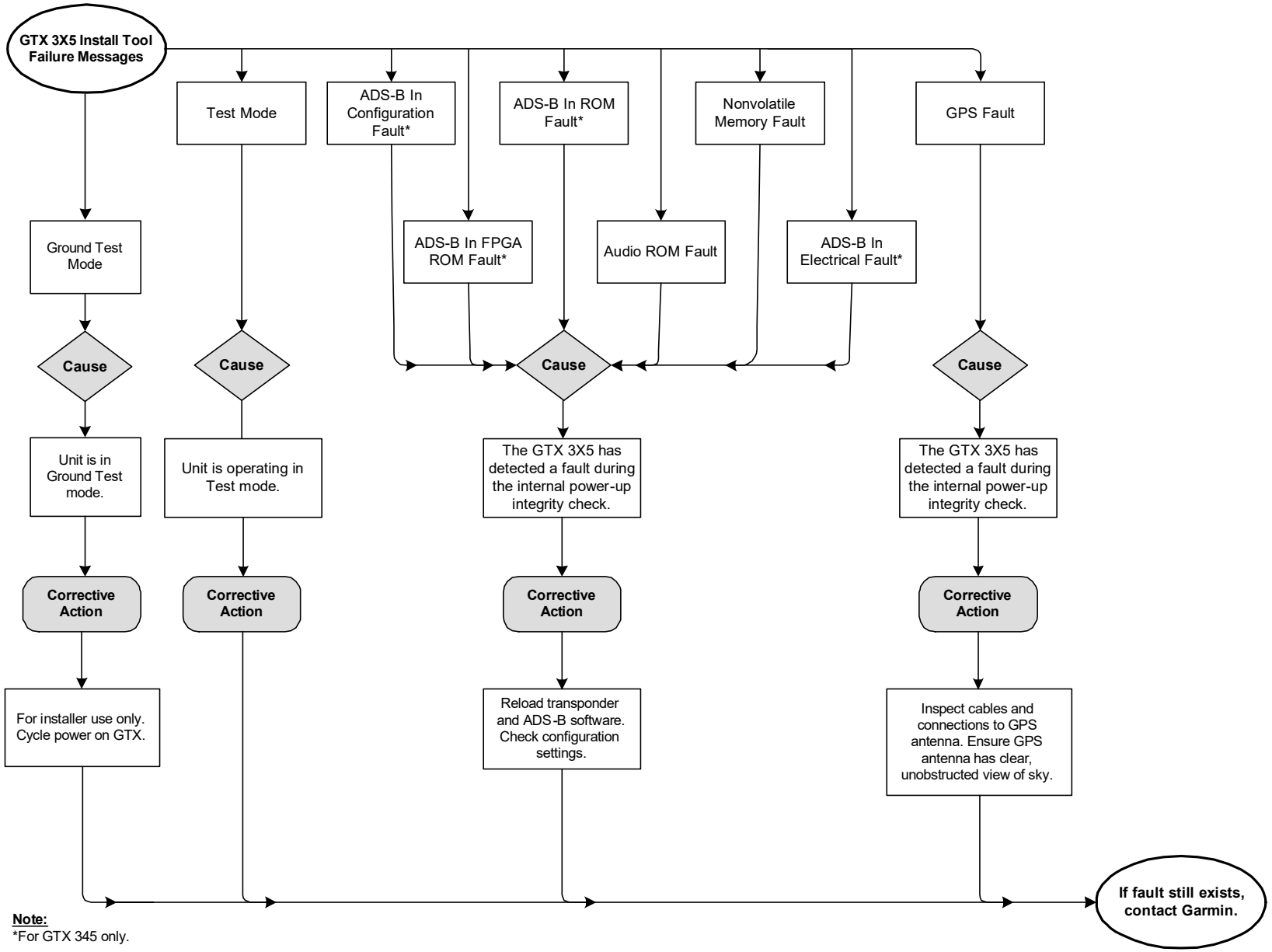

Figure 5-3 GTX 3X5 Install Tool Failure/Fault Messages
Sheet 4 of 5

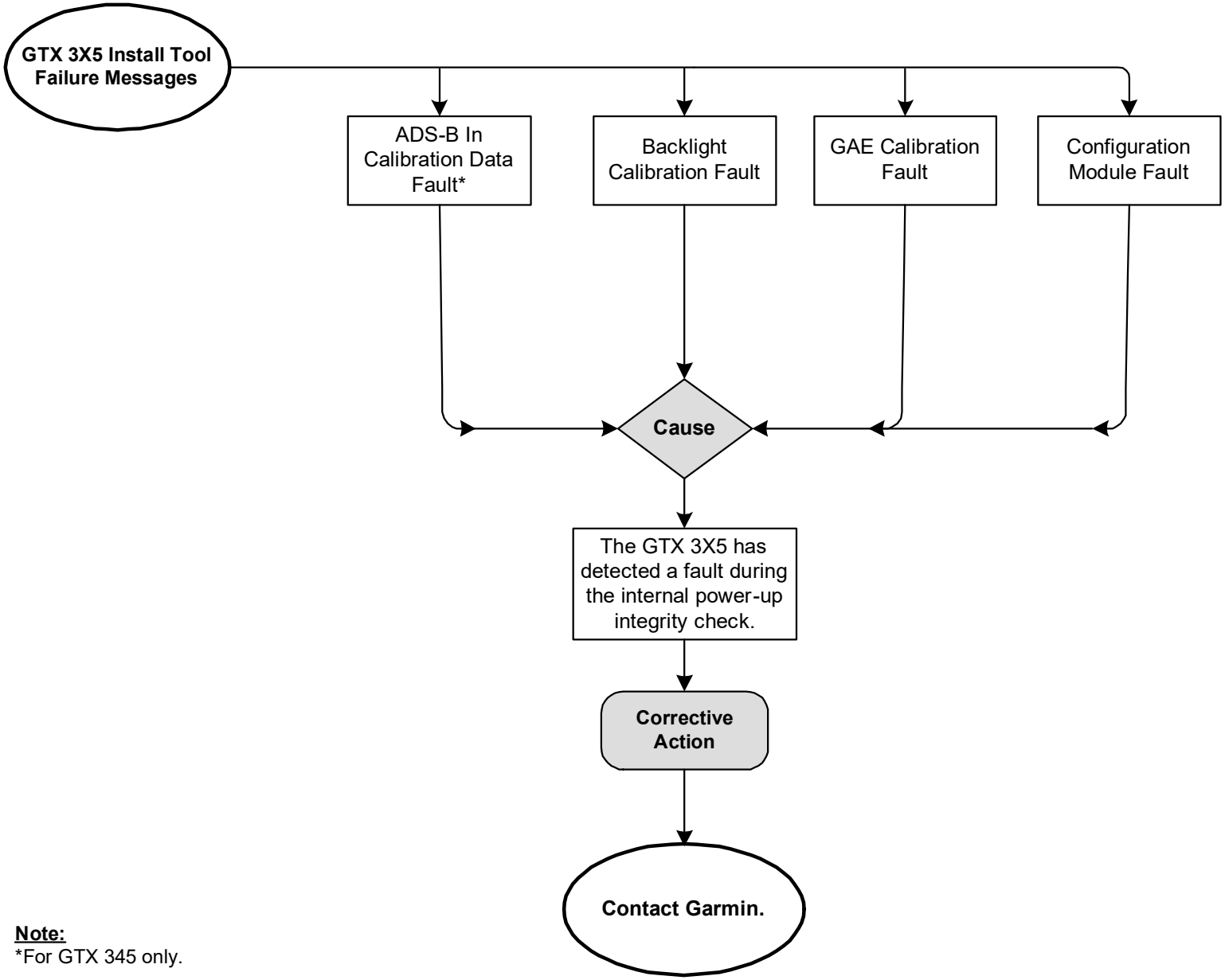

Note:
*For GTX 345 only.

Figure 5-3 GTX 3X5 Install Tool Failure/Fault Messages
Sheet 5 of 5

5.3 Connector Pinout Information

5.3.1 GTX 3X5

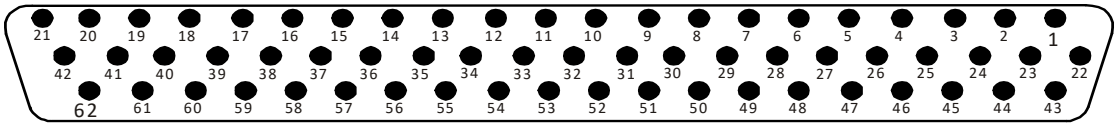

Figure 5-4 Rear View, Connector J3251

Table 5-1 J3251 Pinout

Pin	GTX 3X5 Pin Name	I/O
1	ALT ENCODER/CONFIG MODULE CLOCK	I/O
2	USB DATA HI	I/O
3	TEMP PROBE IN	IN
4	TIME MARK A	I/O
5	ARINC 429 OUT A	OUT
6	ARINC 426 OUT B	OUT
7	RS-232 OUT 3	OUT
8	RS-232 OUT 2	OUT
9	RS-232 OUT 1	OUT
10	ALITTUDE A1	IN
11	ALTITUDE B1	IN
12	ALTITUDE C1	IN
13	ALTITUDE D4	IN
14	EXTERNAL STANDBY SELECT	IN
15	CONFIGURABLE DISCRETE 1	I/O
16	CONFIGURABLE DISCRETE 2	I/O
17	XPDR FAIL 1	OUT
18	EXTERNAL SUPPRESSION	I/O
19	LIGHTING BUS HI	IN
20	ROTORCRAFT GROUND	IN
21	ROTORCRAFT POWER 1	IN
22	ALT ENCODER/CONFIG MODULE DATA	I/O
23	ALT ENCODER/CONFIG MODULE GND	IN
24	USB DATA LO	I/O
25	TEMP PROBE OUT	OUT
26	TIME MARK B	I/O
27	ARINC 426 IN 1A	IN
28	ARINC 429 IN 1B	IN
29	RS-232 IN 3	IN

Pin	GTX 3X5 Pin Name	I/O
30	RS-232 IN 2	IN
31	RS-232 IN 1	IN
32	ALTITUDE A2	IN
33	ALTITUDE B2	IN
34	ALTITUDE C2	IN
35	RESERVED	IN
36	EXTERNAL IDENT SELECT	IN
37	AUDIO INHIBIT 2	IN
38	POWER CONTROL	IN
39	SWITCHED POWER OUT	OUT
40	LIGHTING BUS LO	IN
41	ROTORCRAFT GROUND	--
42	ROTORCRAFT POWER 1	--
43	ALT ENCODER/CONFIG MODULE POWER	--
44	USB VBUS POWER	I/O
45	USB GND	--
46	AUDIO OUT HI	OUT
47	AUDIO OUT LO	OUT
48	ARINC 429 IN 2A	IN
49	ARINC 429 IN 2B	IN
50	RS-232 GND 3	--
51	RS-232 GND 2	--
52	RS-232 GND 1	--
53	ALTITUDE A4	IN
54	ALTITUDE B4	IN
55	ALTITUDE C4	IN
56	ALTITUDE GROUND	--
57	SQUAT SWITCH	IN
58	AIR DATA SELECT	IN
59	POWER CONFIG	IN
60	GPS KEEP ALIVE	--
61	ROTORCRAFT POWER 2	--
62	ROTORCRAFT POWER 2	--

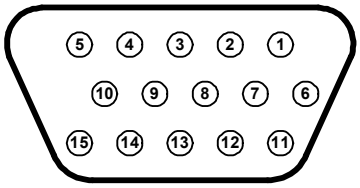

Figure 5-5 Rear View, Connector J3252

Table 5-2 J3252 Pinout

Pin	GTX 345/345R Pin Name	I/O
1	ETHERNET OUT 1B	OUT
2	ETHERNET IN 1B	IN
3	ETHERNET OUT 2B	OUT
4	ETHERNET IN 2B	IN
5	RS-232 OUT 4	OUT
6	ETHERNET OUT 1A	OUT
7	ETHERNET IN 1A	IN
8	ETHERNET OUT 2A	OUT
9	ETHERNET IN 2A	IN
10	RS-232 IN 4	IN
11	RS-422 A	OUT
12	RS-422 B	OUT
13	CONFIGURABLE DISCRETE 11	I/O
14	CONFIGURABLE DISCRETE 12	I/O
15	RS-232 GND 4	--

5.3.2 Altitude Functions

Gillham code altitude inputs are considered active if either the voltage to ground is < 1.9 V or the resistance to ground is < 375 Ω. These inputs are considered inactive if the voltage to ground is 11-33 VDC. The GTX 3X5/3X5R discrete I/O pins are configurable. If the Gillham input is not enabled in the configuration menu, then the Gillham code altitude pins can be used for other discrete input functions. If the Gillham input is enabled, these pins will not be available for selection on other discrete inputs in the configuration menu.

Table 5-3 GTX 3X5/3X5R Encoded Altitude Pin Assignments

Pin	Pin Name	I/O	Connector
13	ALTITUDE D4	IN	J3251
10	ALTITUDE A1	IN	J3251
32	ALTITUDE A2	IN	J3251
53	ALTITUDE A4	IN	J3251
11	ALTITUDE B1	IN	J3251
33	ALTITUDE B2	IN	J3251
54	ALTITUDE B4	IN	J3251
12	ALTITUDE C1	IN	J3251
34	ALTITUDE C2	IN	J3251
55	ALTITUDE C4	IN	J3251
56	ALTITUDE COMMON	--	J3251

5.3.3 Discrete Functions

Discrete Outputs

Table 5-4 GTX 3X5/3X5R Discrete Outputs

Pin	Pin Name	I/O	Unit (335/345/ 335R/345R)	Connector
17	TRANSPONDER FAIL 1	OUT	All	J3251
18	EXTERNAL SUPPRESSION	I/O	All	J3251
X	REPLY ACTIVE	OUT	All	J3251/J3252
X	TRANSPONDER FAIL #2	OUT	All	J3251/J3252
X	ALTITUDE ALERT*	OUT	All	J3251/J3252
X	EQUIPMENT STATUS	OUT	All	J3251/J3252
X	TRAFFIC ALERT	OUT	345/345R	J3251/J3252
X	TRAFFIC STANDBY	OUT	345/345R	J3251
X	TRAFFIC TEST	OUT	345/345R	J3251
X	TCAD SENSITIVITY	OUT	345/345R	J3251/J3252
* INACTIVE: $10 \leq V_{in} \leq 33$ VDC or $R_{in} \geq 100$ kΩ (Open) ACTIVE: $V_{in} \leq 1.9$ VDC with ≥75 uA sink current, or $R_{in} \leq 375$ Ω (GND) Sink current is internally limited to 200 uA max for a grounded input.				
X Denotes that this discrete output can be configured to any available discrete output pin on either the J3251 or J3252 connectors. Refer to Table 5-5 for a list of configurable output pins.				

Table 5-5 GTX 3X5/3X5R Configurable Output Pins

Pin	Pin Name	I/O	Unit (335/345/ 335R/345R)	Connector
17	TRANSPONDER FAIL #1	OUT	All	J3251
15	CONFIGURABLE DISCRETE #1	I/O	All	J3251
16	CONFIGURABLE DISCRETE #2	I/O	All	J3251
13	CONFIGURABLE DISCRETE #11	I/O	345/345R	J3252
14	CONFIGURABLE DISCRETE #12	I/O	345/345R	J3252

Discrete Inputs

Table 5-6 GTX 3X5/3X5R Discrete Inputs

Pin	Pin Name	I/O	Unit (335/345/ 335R/345R)	Connector
X	TIS-A SELECT*	IN	335/335R	J3251
X	ALTITUDE SOURCE*	IN	All	J3251/J3252
X	AUDIO INHIBIT #1*	IN	All	J3251/J3252
37	AUDIO INHIBIT #2*	IN	All	J3251
58	AIR DATA SOURCE*	IN	All	J3251
57	SQUAT	IN	All	J3251
36	IDENT*	IN	All	J3251
14	STANDBY*	IN	All	J3251
13	INSTALL ID SELECT	IN	All	J3251
18	EXTERNAL SUPPRESSION I/O	I/O	All	J3251
* INACTIVE: $10 \leq V_{in} \leq 33$ VDC or $R_{in} \geq 100$ kΩ (Open) ACTIVE: $V_{in} \leq 1.9$ VDC with ≥75 uA sink current, or $R_{in} \leq 375$ Ω (GND) Sink current is internally limited to 200 uA max for a grounded input.				
X Denotes that this discrete input can be configured to any available discrete input pin on either the J3251 or J3252 connectors. Refer to Table 5-7 for a list of configurable input pins.				

Table 5-7 GTX 3X5/3X5R Configurable Input Pins

Pin	Pin Name	I/O	Unit (335/345/ 335R/345R)	Connector
37	AUDIO INHIBIT #2	IN	All	J3251
58	AIR DATA SELECT	IN	All	J3251
57	SQUAT SWITCH	IN	All	J3251
36	EXTERNAL IDENT	IN	All	J3251
14	EXTERNAL STANDBY	IN	All	J3251
18	EXTERNAL SUPPRESSION I/O	I/O	All	J3251
15	CONFIGURABLE DISCRETE #1	I/O	All	J3251
16	CONFIGURABLE DISCRETE #2	I/O	All	J3251
13	CONFIGURABLE DISCRETE #11	I/O	345/345R	J3252
14	CONFIGURABLE DISCRETE #12	I/O	345/345R	J3252

5.3.4 RS-232 Input/Output

Table 5-8 GTX 3X5/3X5R RS-232 Connections

Pin	Pin Name	I/O	Unit (335/345/ 335R/345R)	Connector
9	RS-232 OUT 1	OUT	All	J3251
31	RS-232 IN 1	IN	All	J3251
8	RS-232 OUT 2	OUT	All	J3251
30	RS-232 IN 2	IN	All	J3251
7	RS-232 OUT 3	OUT	All	J3251
29	RS-232 IN 3	IN	All	J3251
5	RS-232 OUT 4	OUT	345/345R	J3252
10	RS-232 IN 4	IN	345/345R	J3252

5.3.5 ARINC 429 Input/Output

Table 5-9 GTX 3X5/3X5R ARINC 429 Connections

Pin	Pin Name	I/O	Unit (335/345/ 335R/345R)	Connector
27	ARINC 429 IN 1A	IN	All	J3251
28	ARINC 429 IN 1B	IN	All	J3251
5	ARINC 429 OUT 1A	OUT	All	J3251
6	ARINC 429 OUT 1B	OUT	All	J3251
48	ARINC 429 IN 2A	IN	All	J3251
49	ARINC 429 IN 2B	IN	All	J3251

5.3.6 RS-422 Out

Table 5-10 GTX 3X5/3X5R RS-422 Connections

Pin	Pin Name	I/O	Unit (335/345/ 335R/345R)	Connector
11	RS-422 A	OUT	345/345R	J3252
12	RS-422 B	OUT	345/345R	J3252

5.3.7 HSDB Input/Output

Table 5-11 GTX 345/345R HSDB Connections

Pin	Pin Name	I/O	Unit (335/345/ 335R/345R)	Connector
6	ETHERNET OUT 1A	OUT	345/345R	J3252
7	ETHERNET IN 1A	IN	345/345R	J3252
1	ETHERNET OUT 1B	OUT	345/345R	J3252
2	ETHERNET IN 1B	IN	345/345R	J3252
8	ETHERNET OUT 2A	OUT	345/345R	J3252
9	ETHERNET IN 2A	IN	345/345R	J3252
3	ETHERNET OUT 2B	OUT	345/345R	J3252
4	ETHERNET IN 2B	IN	345/345R	J3252

6 UNIT REMOVAL AND RE-INSTALLATION

6.1 GTX 3X5 6-2
6.1.1 GTX 335/345 Panel-Mounted Units 6-9
6.1.2 GTX 3X5R with Horizontal Install Rack 6-12
6.1.3 GTX 3X5R with Vertical Install Rack 6-14
6.1.4 Garmin Altitude Encoder 6-16
6.2 Transponder Antenna 6-18
6.3 Traffic Annunciator (If Installed) 6-18

6.1 GTX 3X5

This section contains parts, procedures, and requirements for assembly, removal, and re-installation of GTX 3X5 equipment installed under STC SR02124SE. After removal and re-installation, the GTX 3X5 return to service procedures must be performed in accordance with Section 9. After re-installation of the GTX 3X5, verify that the electrical bond is equal to or less than 2.5 mΩ, per Section 4.6.

Table 6-1 GTX 3X5 Connector Kit

Item	Description	P/N	Qty
1	Connector, hi-dense, D-Sub, mil crimp 62 ckt	330-00185-62	1
2	Sub-assembly, backshell with hardware, 37/62 pin	011-00950-03	1
3	Sub-assembly, ground adapter, shell 4&5	011-01169-01	1
4	Screw, 4-40 X 0.250, FLHP 100, SS/P, nylon	211-63234-06	2 ea connector
5	Connector, hi-dense, D-Sub, mil crimp, 15 ckt	330-00185-15	1
6	Sub-assembly, backshell with hardware, 9/15 pin	011-00950-00	1
7	Sub-assembly, ground adapter, shell 1-3	011-01169-00	1

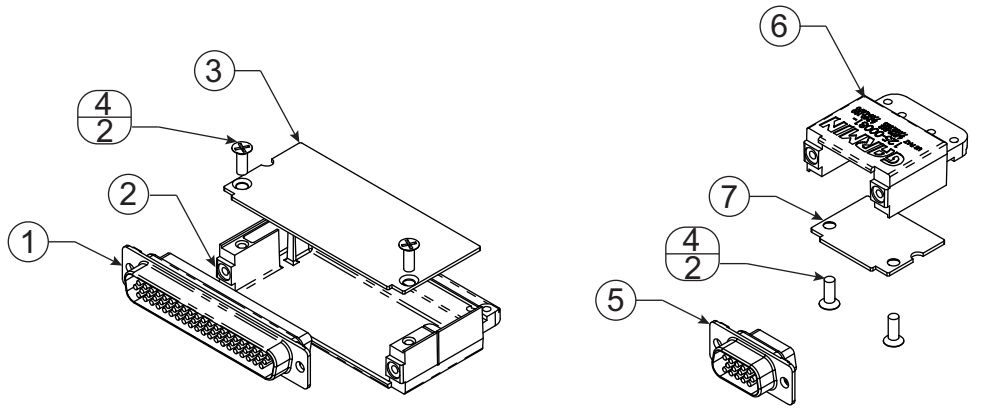

GTX 3X5
P3251

GTX 345/345R Only
P3252

Figure 6-1 GTX 3X5 Connector Kits

For a list of the backplate items associated with the standard mounting assembly, refer to Table 6-2. For detailed drawings of the backplate assembly, refer to Figure 6-2 and Figure 6-3.

Table 6-2 Standard Mount Backplate (P/N 011-02976-00 and -01)

Item	Description	P/N	Qty
1	DCP, connector plate, GTX 3X5, w/secondaries	125-00307-10	1
2	Connector, male/female special, BNC	330-00053-01	1
3	Washer, shoulder, GNC 400	212-00022-00	2
4	Connector, male/female, special, BNC/TNC	330-00053-02	1
5	Screw, 4-40 X 0.250, PHP, SS/P, nylon	211-60234-08	4

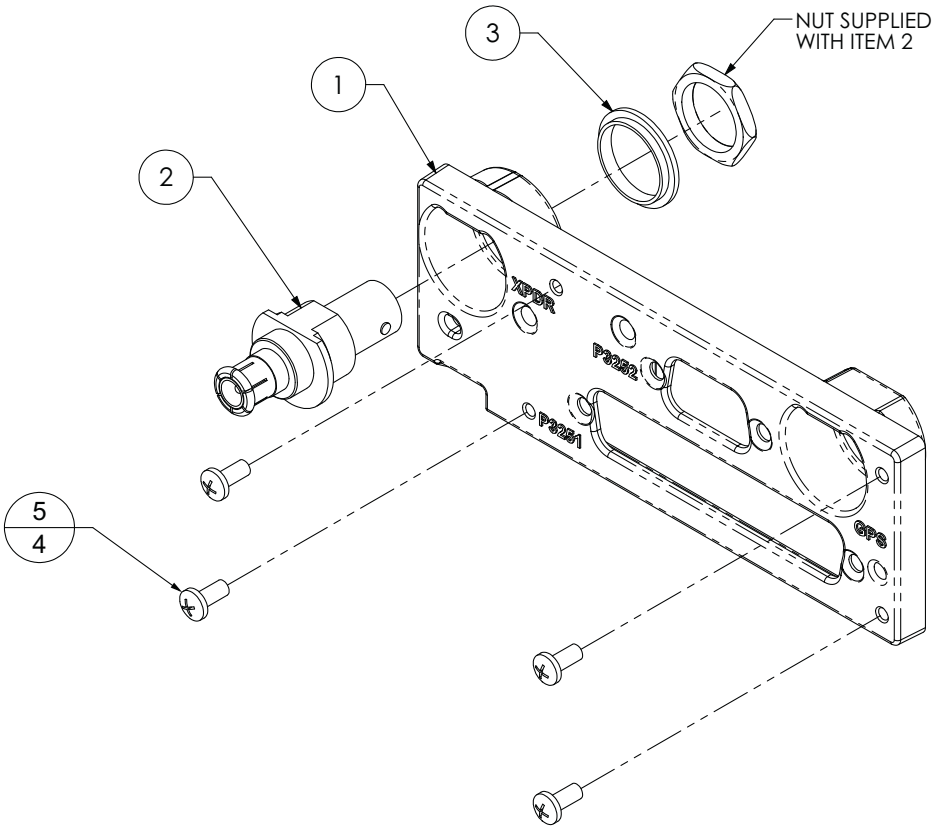

Figure 6-2 GTX 3X5 without GPS Backplate Assembly (P/N 011-02976-00)

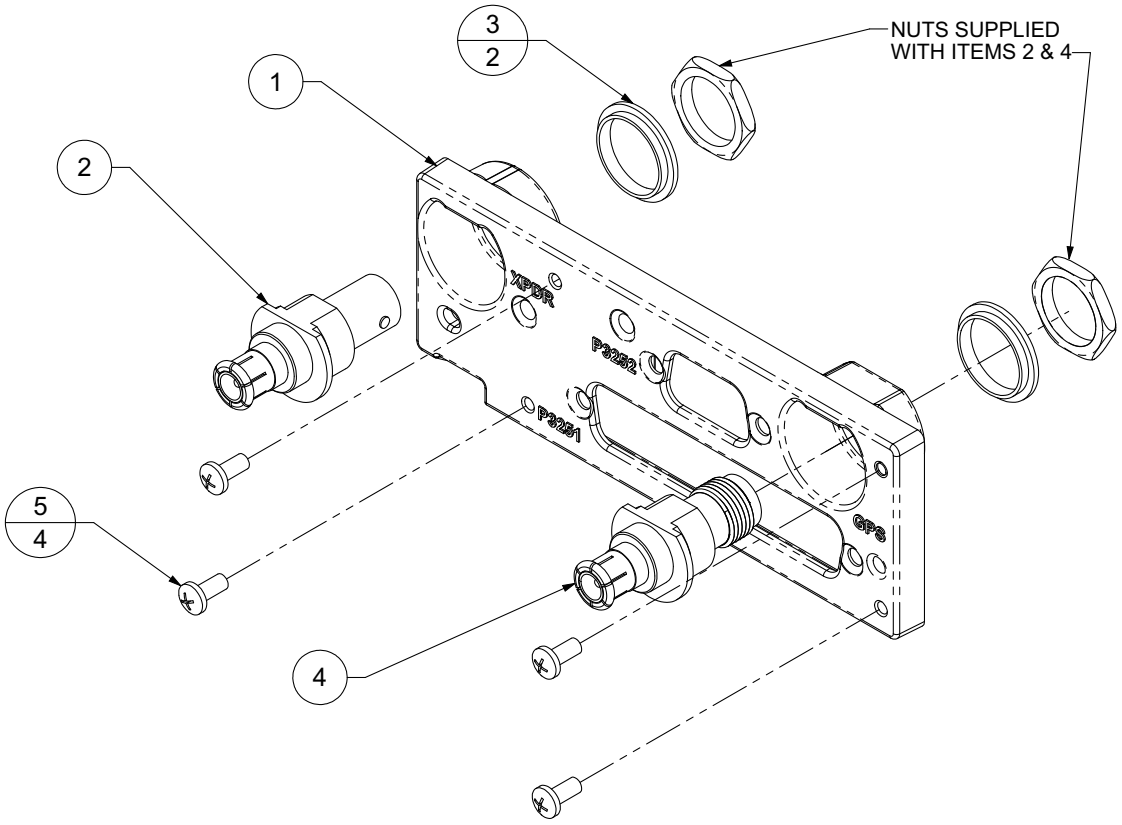

Figure 6-3 GTX 3X5 with GPS Backplate Assembly (P/N 011-02976-01)

For a list of the backplate items associated with the vertical mounting assembly, refer to Table 6-3. For detailed drawings of the backplate assemblies, refer to Figure 6-4, Figure 6-5, and Figure 6-6.

Table 6-3 Vertical Mount Backplate (P/N 011-02976-10)

Item	Description	P/N	Qty
1	DCP, connector plate, remote, GTX 3X5, w/secondaries	125-00343-10	1
2	Connector, male/female special, BNC	330-00053-01	1
3	Washer, centering, no float	212-00022-10	1
4	Washer, split lock, size 8	212-00018-04	2
5	Screw, captive, 8-32, 0.62", 3/32 hex drv	211-00290-00	2

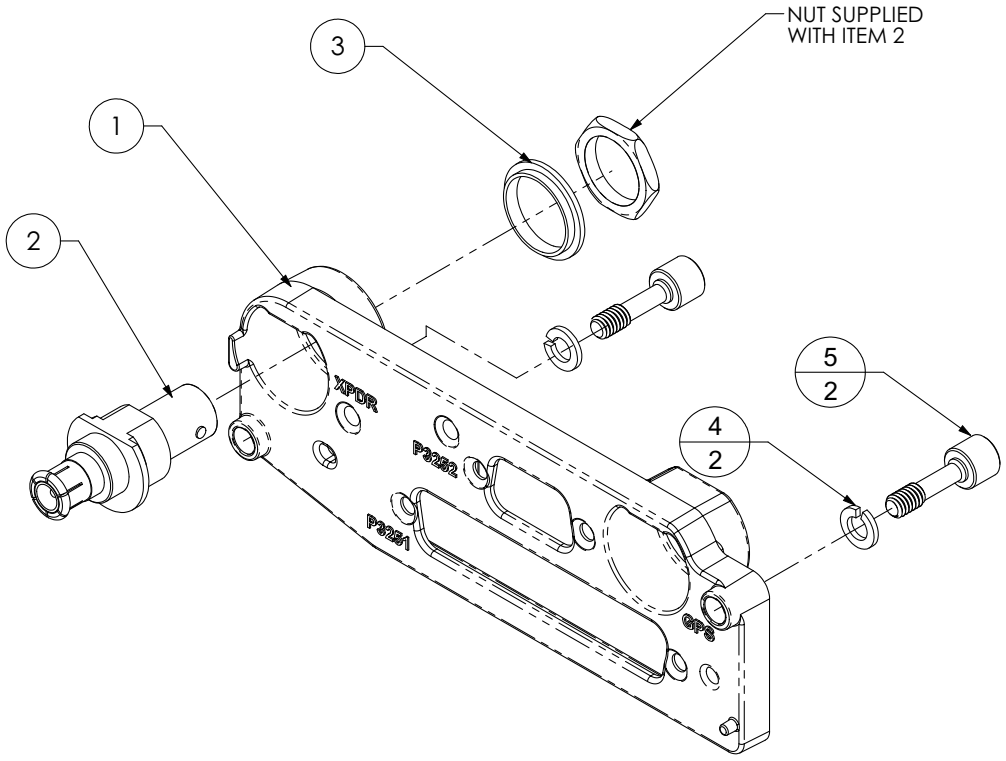

Figure 6-4 GTX 3X5 Vertical Mount without GPS, Backplate Assembly (P/N 011-02976-10)

Table 6-4 Vertical Mount Backplate (P/N 011-02976-11)

Item	Description	P/N	Qty
1	DCP, connector plate, remote, GTX 3X5, w/secondaries	125-00343-10	1
2	Connector, male/female special, BNC	330-00053-01	1
3	Washer, shoulder, GNC 400	212-00022-00	2
4	Connector, male/female, special, BNC/TNC	330-00053-02	1
5	Washer, centering, no float	212-00022-10	1
6	Washer, split lock, size 8	212-00018-04	2
7	Screw, captive, 8-32, 0.62", 3/32 hex drv	211-00290-00	2

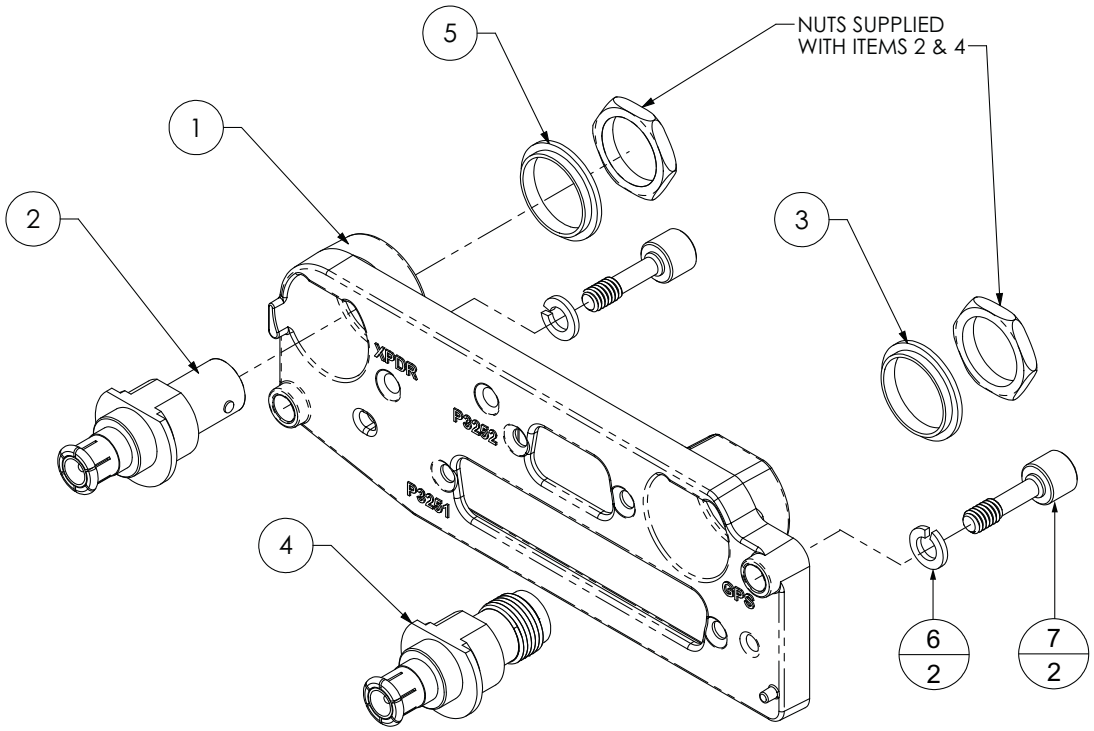

Figure 6-5 GTX 3X5 Vertical Mount with GPS, Backplate Assembly (P/N 011-02976-11)

Table 6-5 Vertical Mount Backplate (P/N 011-02976-12)

Item	Description	P/N	Qty
1	DCP, connector plate, remote, GTX 3X5, w/secondaries	125-00343-10	1
2	Connector, male/female, special, BNC/TNC	330-00053-02	1
3	Washer, centering, no float	212-00022-10	1
4	Washer, split lock, size 8	212-00018-04	2
5	Screw, captive, 8-32, 0.62", 3/32 hex drv	211-00290-00	2

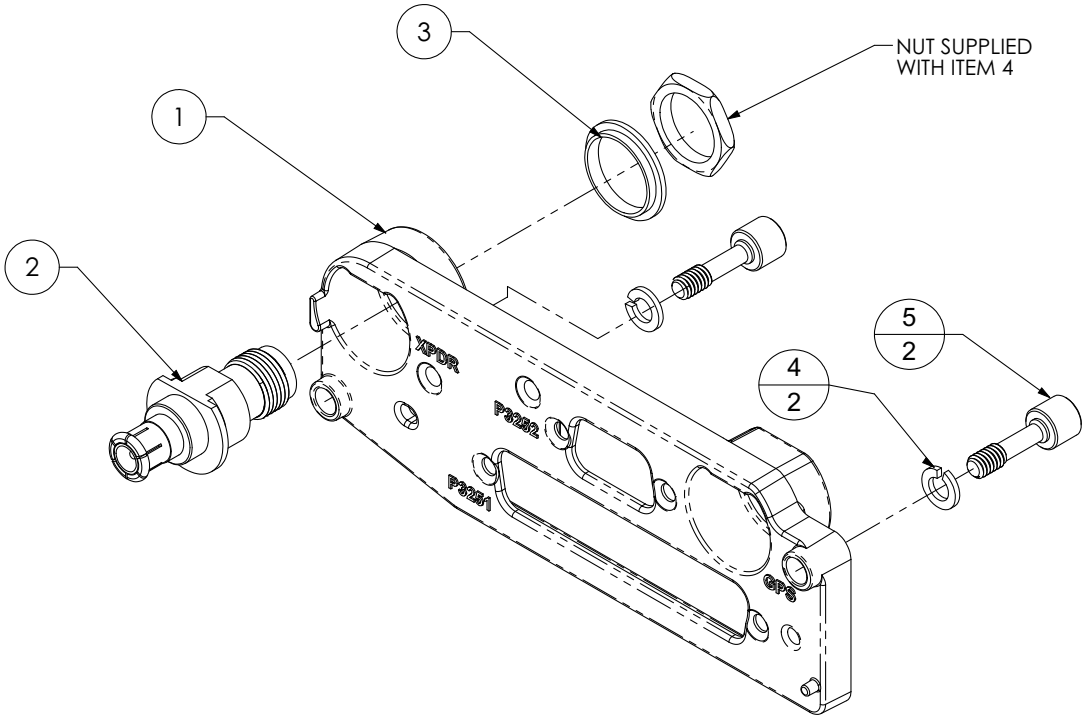

Figure 6-6 GTX 3X5 Vertical Mount with TNC XPDR Backplate Assembly (P/N 011-02976-12)

For a complete list of GTX 3X5 transponder components, refer to Table 6-6. For detailed assembly drawings, refer to Figure 6-7, Figure 6-8, and Figure 6-9.

Table 6-6 GTX 3X5 Transponder Parts List

Item	Description	P/N	
1	GTX 335 Standard Kit	010-01214-01	OR
	GTX 335 NV Standard Kit	010-01214-21	
	GTX 335 GPS, Standard Kit	010-01214-41	
		010-01214-43	
	GTX 345, Standard Kit	010-01216-01	
		010-01216-06	
		010-01216-08	
	GTX 345 NV, Standard Kit	010-01216-21	
		010-01216-26	
	GTX 345 GPS, Standard Kit	010-01216-41	
		010-01216-46	
	GTX 345 NV GPS, Standard Kit	010-01216-61	
		010-01216-66	
2	GTX 335 Remote, Standard Kit	010-0215-01	OR
		010-0215-06	
	GTX 335 Remote GPS, Standard Kit	010-0215-41	
	GTX 345 Remote, Standard Kit	010-0217-01	
		010-0217-06	
		010-0217-0B	
	GTX 345 Remote GPS, Standard Kit	010-0217-41	
		010-0217-46	
3	GTX 335 Remote, Vertical Mount, Standard Kit	010-0215-02	OR
	GTX 335 Remote GPS, Vertical Mount, Standard Kit	010-0215-42	
	GTX 345 Remote, Vertical Mount, Standard Kit	010-0217-02	
		010-0217-07	
	GTX 345 Remote GPS, Vertical Mount, Standard Kit	010-0217-42	
		010-0217-47	
4	Screw, machine, flat, countersunk head 100 degrees, cross-recessed, 0.1380-32UNC-2A	MS24693-S26	
5	Nut, self-locking, plate, one lug, reduced rivet spacing, low height, steel, 0.138-32 UNC-3B	MS21071-06	
6	Rivet, solid, countersunk 100 degrees, precision head, 3/32 in. OD, 3/16 in. long	MS20426AD3-3	
7	Nut, self-locking plate, two-lug, reduced rivet spacing, low height, steel, 0.138-32 UNC-3B	MS21069L3	
8	Screw, machine, flat, countersunk head, 100 degrees, cross-recessed, 0.1900-32 UNF-2A, 0.625 in. long	MS24693-S273	
9	Insert, screw thread, molded-in, blind threaded, self-locking, floating, sandwich panel, 0.190-32 UNJF-3B	NAS1835A-3	
10	GAE 12 Altitude Encoder, Standard Kit	011-03080-00	
11	Adapter, straight, 1/8 in. pipe to 1/4 in. hose	AN840-4D	

6.1.1 GTX 335/345 Panel-Mounted Units

CAUTION

Ensure that the rotorcraft power is off before removal or re-installation of the GTX 3X5. Unplug any auxiliary power supply.

This section contains procedures and requirements for removal and re-installation of the GTX 335/345 panel-mounted units installed under STC SR02124SE. After removal and re-installation, the GTX 335/345 return to service procedures must be performed in accordance with Section 9.

Removal

1. Insert the hex drive tool into the access hole on the unit face and rotate counterclockwise until the unit is forced out about 3/8 inches.
2. Pull the unit straight out of the rack.

Re-Installation

CAUTION

Be sure not to overtighten the unit into the rack. Torque exceeding 8 in-lbf can damage the locking mechanism.

NOTE

It may be necessary to insert the hex drive tool into the access hole and rotate the cam mechanism 90 ° counterclockwise to ensure correct position prior to placing the unit in the rack.

1. Slide the GTX 3X5 straight in the rack until it stops about 1 inch short of the final position.
2. Insert a 3/32” hex drive tool into the access hole at the bottom of the unit face.
3. Turn the hex tool clockwise while pressing on the left side of the bezel until the unit is firmly seated in the rack.
4. Count the number of complete revolutions the hex screw can be turned, not exceeding 8 in-lbf of torque. Be careful not to overtighten. Three turns is the minimum for proper installation. If fewer than three turns are possible, ensure nothing obstructs the unit from fully seating in the rack.
5. Complete the applicable return to service procedures in Section 9.

Table 6-7 Part Numbers (Panel-Mounted)

Standard Kit	Description	Unit	Install Rack	Backplate	Connector Kit
010-01214-01	GTX 335	011-03300-00	115-01771-01	011-02976-00	011-02977-00
010-01214-21	GTX 335 NV	011-03300-20	115-01771-01	011-02976-00	011-02977-00
010-01216-01	GTX 345	011-03302-00	115-01771-01	011-02976-00	011-02977-01
010-01216-06		011-03302-01	115-01771-01	011-02976-00	011-02977-01
010-01216-08		011-03302-02	115-01771-01	011-02976-00	011-02977-01
010-01216-21	GTX 345 NV	011-03302-20	115-01771-01	011-02976-00	011-02977-01
010-01216-26		011-03302-21	115-01771-01	011-02976-00	011-02977-01
010-01214-41	GTX 335 GPS	011-03300-40	115-01771-01	011-02976-01	011-02977-00
010-01214-43		011-03300-41	115-01771-01	011-02976-01	011-02977-00
010-01216-41	GTX 345 GPS	011-03302-40	115-01771-01	011-02976-01	011-02977-01
010-01216-46		011-03302-41	115-01771-01	011-02976-01	011-02977-01
010-01216-61	GTX 345 NV GPS	011-03302-60	115-01771-01	011-02976-01	011-02977-01
010-01216-66		011-03302-61	115-01771-01	011-02976-01	011-02977-01

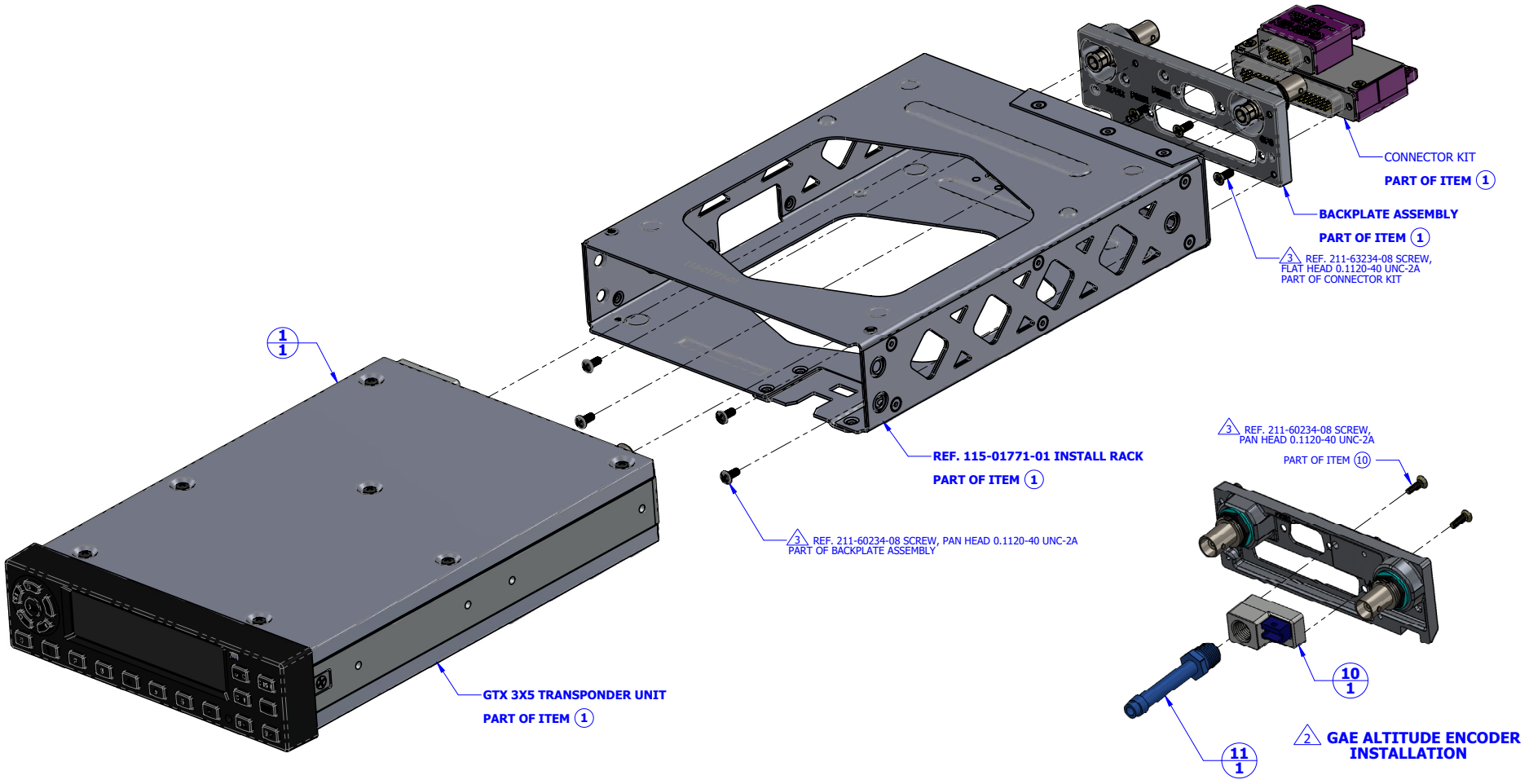

NOTES:

1 BALLOON NUMBERS REFER TO TABLE 6-6.

2 INSTALLATION OF GAE ALTITUDE ENCODER IS OPTIONAL.

3 TORQUE .1120-40 UNC-2A (NO. 4) FASTENERS 6-8 IN-LBS.

Figure 6-7 Panel-Mounted GTX 3X5 Transponder

6.1.2 GTX 3X5R with Horizontal Install Rack

CAUTION

Ensure that the rotorcraft power is off before removal or re-installation of the GTX 3X5R. Unplug any auxiliary power supply.

This section contains procedures and requirements for removal and installation of GTX 335R/345R equipment installed using a standard remote mount. After removal and re-installation, the GTX 335R/345R return to service procedures must be performed in accordance with Section 9.

Removal

1. Gain access to the transponder.
2. Insert the hex drive tool into the access hole on the unit face and rotate counterclockwise until the unit is forced out about 3/8 inches.
3. Grab the pull-tab on the front of the unit and pull the unit straight out of the rack.

Re-Installation

CAUTION

Be sure not to overtighten the unit into the rack. Torque exceeding 8 in-lbf can damage the locking mechanism.

NOTE

It may be necessary to insert the hex drive tool into the access hole and rotate the cam mechanism 90° counterclockwise to ensure correct position prior to placing the unit in the rack.

1. Visually inspect the connectors and pins to ensure they are not bent or damaged. Repair any damage.
2. Slide the GTX 3X5 straight into the rack until it stops about 1 inch short of the final position.
3. Insert a 3/32” hex drive tool into the access hole at the bottom of the unit.
4. Turn the hex tool clockwise while pressing on the left side of the unit until the unit is firmly seated in the rack.
5. Count the number of complete revolutions the hex screw can be turned, not exceeding 8 in-lbf of torque. Be careful not to overtighten. Three turns is the minimum for proper installation. If fewer than three turns are possible, ensure nothing obstructs the unit from fully seating in the rack.
6. Complete the applicable return to service procedures in Section 9.

Table 6-8 Part Numbers (Remote Horizontal Mount)

Standard Kit	Description	Unit	Install Rack	Backplate	Connector Kit
010-01215-01	GTX 335R	011-03301-00	115-01771-01	011-02976-00	011-02977-00
010-01215-06		011-03301-01	115-01771-01	011-02976-00	011-02977-00
010-01217-01	GTX 345R	011-03303-00	115-01771-01	011-02976-00	011-02977-01
010-01217-06		011-03303-01	115-01771-01	011-02976-00	011-02977-01
010-01217-0B		011-03303-02	115-01771-01	011-02976-00	011-02977-01
010-01215-41	GTX 335R GPS	011-03301-40	115-01771-01	011-02976-01	011-02977-00
010-01217-41	GTX 345R GPS	011-03303-40	115-01771-01	011-02976-01	011-02977-01
010-01217-46		011-03303-41	115-01771-01	011-02976-01	011-02977-01

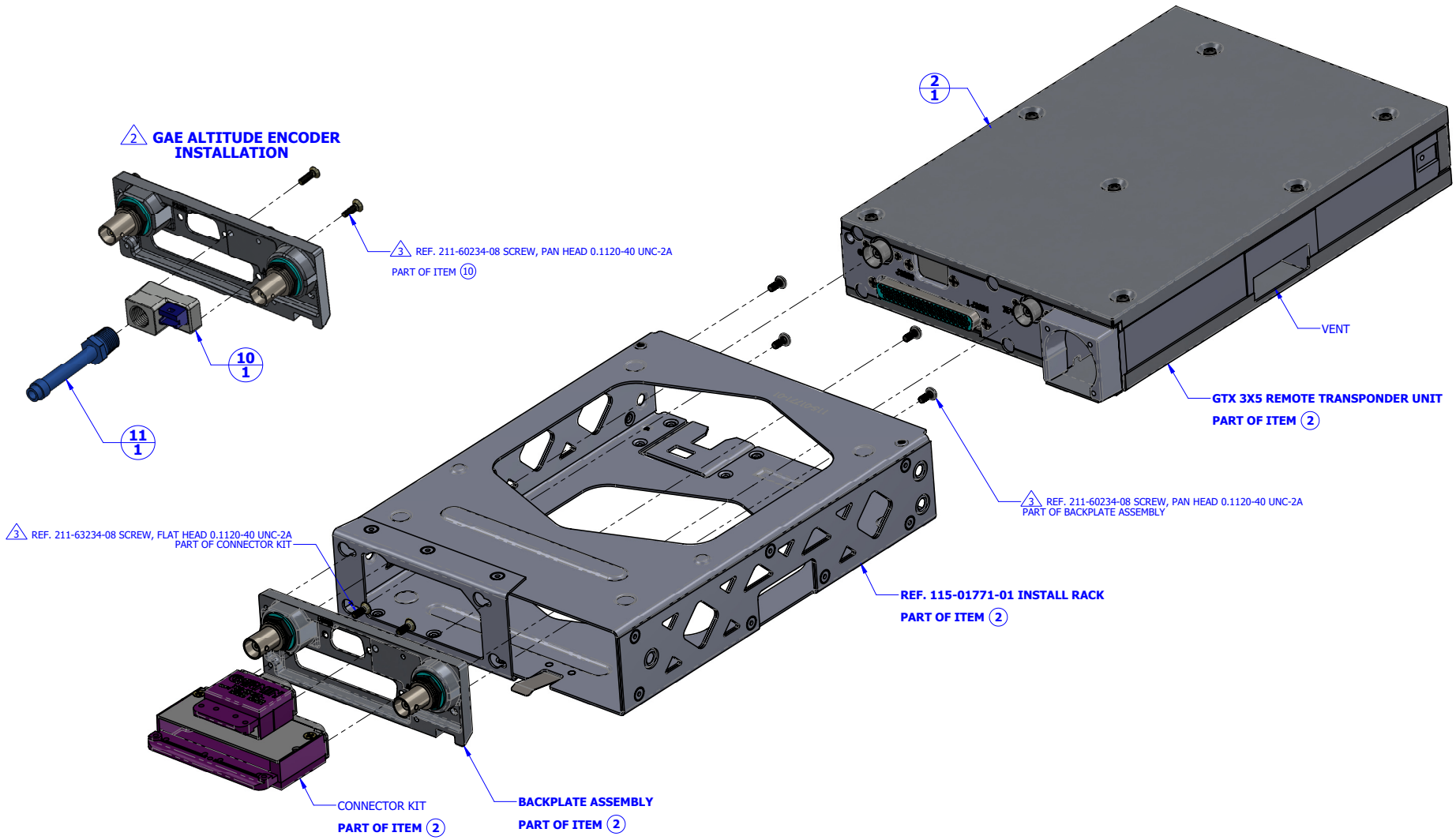

NOTES:

1 BALLOON NUMBERS REFER TO TABLE 6-6.

2 INSTALLATION OF GAE ALTITUDE ENCODER IS OPTIONAL.

3 TORQUE .1120-40 UNC-2A (NO. 4) FASTENERS 6-8 IN-LBS.

Figure 6-8 GTX 3X5R Remote Transponder with Horizontal Mount

6.1.3 GTX 3X5R with Vertical Install Rack

CAUTION

Ensure the rotorcraft power is off before removal or re-installation of the GTX 3X5R. Unplug any auxiliary power supply.

This section contains procedures for removal and installation of the GTX 335R/345R equipment installed using a vertical mount. After removal and re-installation, the GTX 335R/345R return to service procedures must be performed.

Removal

1. Access the transponder.
2. Remove the two captive screws securing the backplate to the transponder body using a 3/32" hex tool.
3. Carefully remove the backplate and connector assembly from the unit.
4. While pulling, turn the large knob at the base of the unit counterclockwise until it can be pulled off the tab on the base plate.
5. Tilt the unit so that the toe of the GTX 3X5 shoe fully disengages the base plate.

Installation

1. Tilt the unit so that the toe of the GTX 3X5 shoe fully engages the base plate.
2. Ensure that the unit is fully engaged and in line with the base.
3. Lift the large knob on the install rack up and over the tab on the base plate.
4. Turn the large knob clockwise until the unit is secure.
5. Carefully install the backplate onto the unit.
6. Secure with the two captive screws using a 3/32" hex tool.
7. Complete the applicable return to service procedures in Section 9.

Table 6-9 Part Numbers (Remote Vertical Mount)

Standard Kit	Description	Unit	Install Rack	Backplate	Connector Kit
010-01215-02	GTX 335R (Vertical Mount)	011-03301-00	011-03762-00	011-02976-10	011-02977-00
010-01217-02	GTX 345R (Vertical Mount)	011-03303-00	011-03762-00	011-02976-10	011-02977-01
010-01217-07		011-03303-01	011-03762-00	011-02976-10	011-02977-01
010-01215-42	GTX 335R GPS (Vertical Mount)	011-03301-40	011-03762-00	011-02976-11	011-02977-00
010-01217-42	GTX 345R GPS (Vertical Mount)	011-03303-40	011-03762-00	011-02976-11	011-02977-01
010-01217-47		011-03303-41	011-03762-00	011-02976-11	011-02977-01

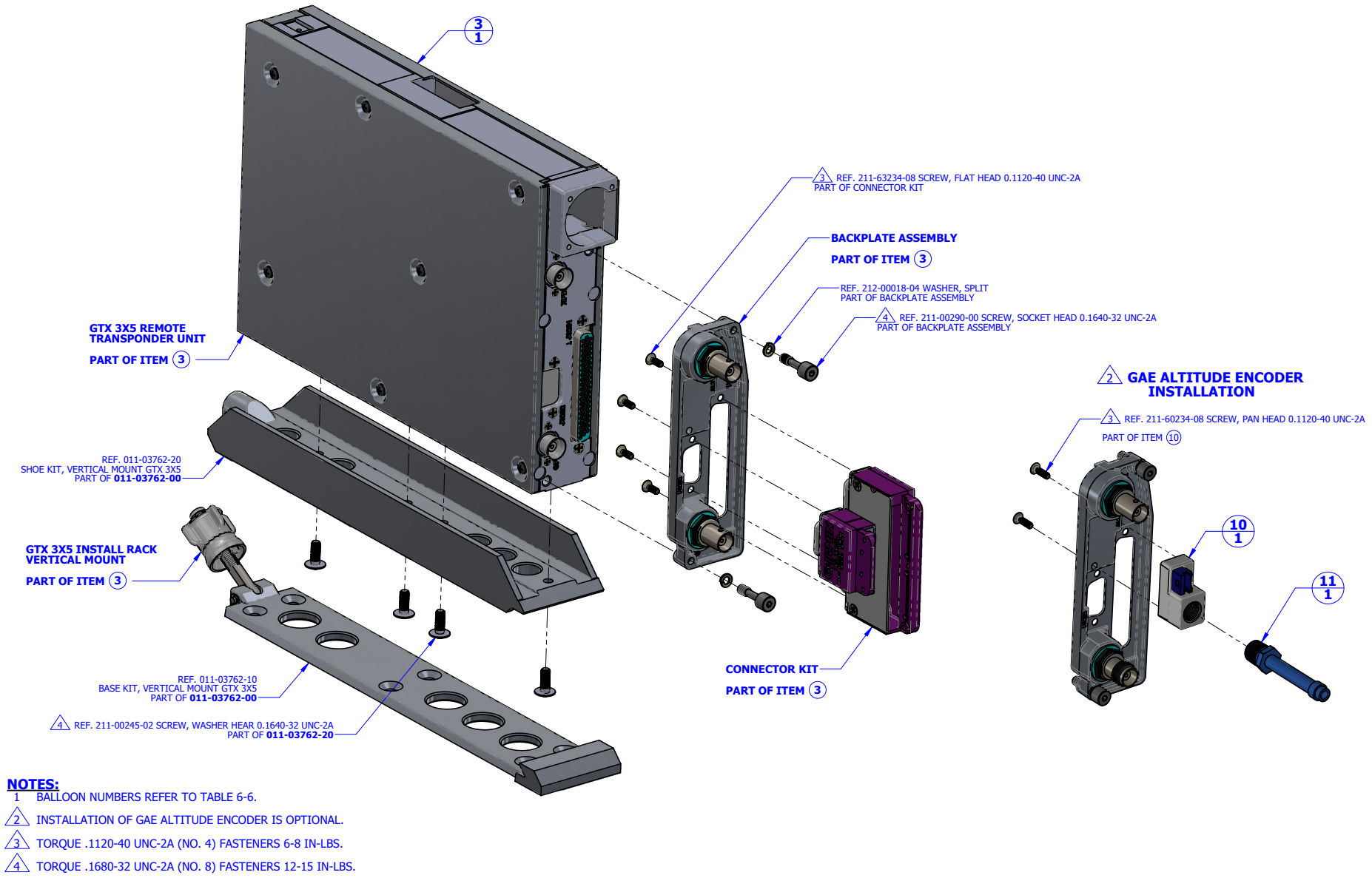

Figure 6-9 GTX 3X5R Remote Transponder with Vertical Mount

6.1.4 Garmin Altitude Encoder

CAUTION

Ensure that the rotorcraft power is off before removal or re-installation of the GTX 3X5/3X5R. Unplug any auxiliary power supply.

This section contains procedures and requirements for removal and installation of the Garmin Altitude Encoder equipment installed under STC SR02124SE. After removal and re-installation, the GTX 3X5/3X5R return to service procedures must be performed in accordance with Section 9.

Removal

1. Remove the transponder. Refer to Section 6.1 for details.
2. Remove the static line attached to the altitude encoder.
3. Disconnect wiring harness at the altitude encoder.
4. Remove the two screws securing the unit to the backplate.

Installation

1. Secure the altitude encoder to backplate assembly with two screws; torque to 8 in-lbf.
2. Connect wiring harness to altitude encoder.
3. Secure the static line to the altitude encoder using standard practices.
4. Install transponder. Refer to Section 6.1 for details.
5. Complete the applicable return to service procedures in Section 9.
6. Complete the static system and transponder checks described in Section 8.4.2.

Table 6-10 Garmin Altitude Encoder Kit (P/N 011-03080-00)

Item	Description	P/N	Qty
1	Sub-assembly, altitude encoder, unit only	011-03080-01	1
2	Screw, 4-40 X 0.250, PHP, SS/P, w/nyl	211-60234-08	2

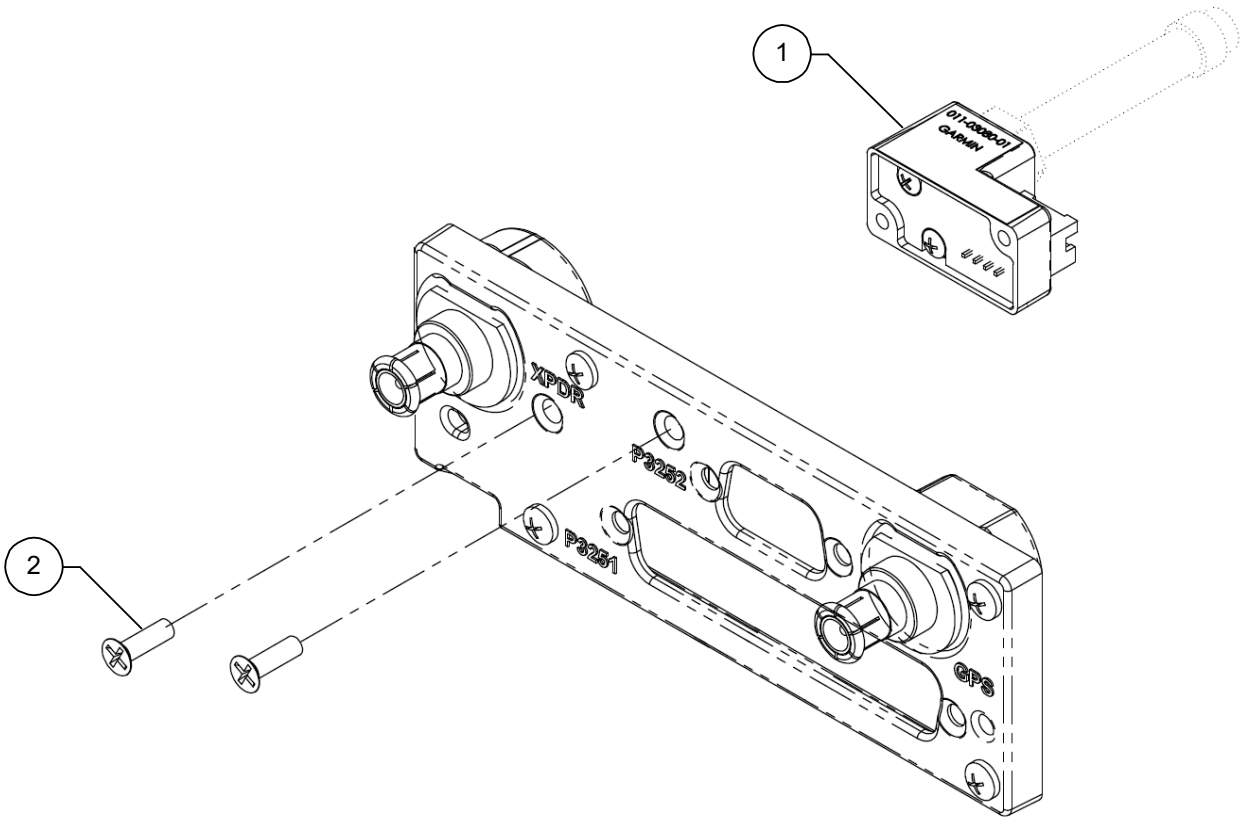

Figure 6-10 Garmin Altitude Encoder with Backplate Assembly

6.2 Transponder Antenna

The transponder antenna(s) is not installed by this STC. Refer to the antenna manufacturer's maintenance information for removal and re-installation instructions.

6.3 Traffic Annunciator (If Installed)



CAUTION

Ensure that the rotorcraft power is off before removal or re-installation of the GTX 3X5/3X5R. Unplug any auxiliary power supply.

This section contains procedures and requirements for removal and installation of the Vivisun Traffic annunciator installed under STC SR02124SE. After removal and installation, the Traffic annunciator return to service procedures must be performed in accordance with Section 9.

Removal

1. Disconnect all annunciator wiring.
2. Remove the annunciator indicator cap by applying pressure on the two sides of the switch cap and pulling the switch cap from the switch body.
3. Gently remove the cap pins from the hinged slide retainer.
4. From the front of the indicator, locate the two slotted head integral mounting screws. Loosen the two screws and remove the locking sleeve from the back of the indicator.
5. Pull the indicator out through the front of the mounting panel.

Installation

1. Insert the indicator body through the front of the mounting panel.
2. Slide the locking sleeve onto the indicator body until it touches the mounting panel.
3. From the front of the switch body, locate the two slot head integral mounting screws in the base of the body. Tighten the two screws until the mounting sleeve is pulled against the panel. Torque 18 to 25 inch-ounces.
4. Reconnect all annunciator wiring.
5. Push in transponder circuit breaker.

Table 6-11 Traffic Annunciator Installation

Item	Description	P/N	Qty
1	Annunciator, Traffic, Vivisun	LED-40-17-HAI-E1G30	1
2	Plug, Quick Connect, Vivisun	18-200	1
3	Mounting Sleeve (Part of Annunciator)		

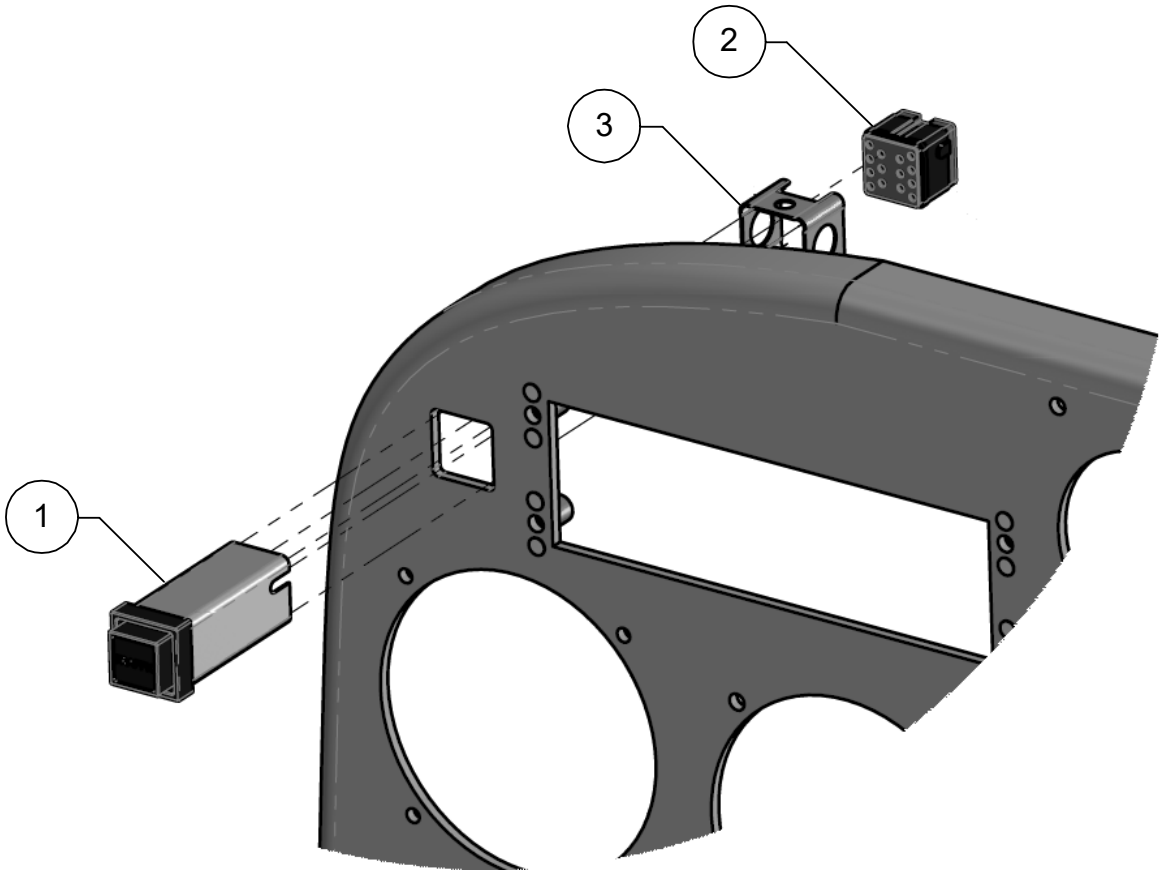

Figure 6-11 Traffic Annunciator Installation

7 SOFTWARE

7.1 Software Check 7-2
7.1.1 GTX 3X5 Software Version Check 7-2
7.1.2 GTX 3X5R Software Version Check (GTN 6XX/7XX/Xi) 7-3
7.2 GTX 3X5/3X5R Software Update 7-4

7.1 Software Check

NOTE

It is essential that the software version is correct. If the software version and/or part number does not match those specified, or if the software is not successfully loaded, ***DO NOT*** *continue. Troubleshoot and resolve the issue before continuing.*

NOTE

Screen shots in this section are provided for reference only. For approved GTX software versions, refer to GTX 3X5 ADS-B AML STC Equipment List.

If software is loaded during maintenance, conduct a final software review.

7.1.1 GTX 3X5 Software Version Check

1. Start the GTX 3X5 in Normal mode.
2. Observe the start-up screen until you see "PRESS ENT FOR PRODUCT DATA." Refer to Figure 7-1 for details.



Figure 7-1 GTX 3X5 Start-Up Screen

3. Press the **ENT** key to navigate to the software version screen.
4. Verify the version number matches the approved version listed on the STC Equipment List. Refer to Figure 7-2 for details.



Figure 7-2 GTX 3X5 Product Data Page

7.1.2 GTX 3X5R Software Version Check (GTN 6XX/7XX/Xi)

NOTE

The following procedures provide an overview to verify the software version of the GTX 3X5R when interfaced with the GTN 6XX/7XX/Xi.

1. On the GTN 6XX/7XX/Xi ***System*** page, touch the **External LRUs** key.
2. Observe the reported GTX software version number. Refer to Figure 7-3 for details.
3. Verify the version number matches the approved version listed on the STC Equipment List.

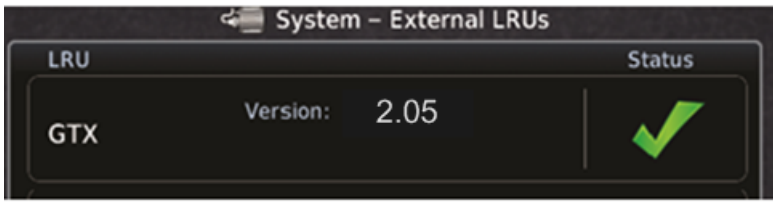

Figure 7-3 GTN 6XX/7XX System Page

7.2 GTX 3X5/3X5R Software Update

CAUTION

If the unit is removed from the rotorcraft and operated, connect the transponder antenna connection to a 50 Ω 5 watt load. The GTX transmits Mode S acquisition squitter pulses once per second whether interrogations are received or not. Failure to connect a dummy load or antenna during this procedure will cause the transponder to fail and possibly damage the unit.

If a unit is replaced and does not have the approved version of software installed, software can be downloaded from the Dealer Resource Center. For dual GTX installations, the software loading procedures below must be carried out on each GTX.

Software may be loaded by performing the following steps on the GTX Install Tool ***Software Upload*** page. Refer to Figure 7-5.

1. Download the GTX 3X5/3X5R software from the Garmin Dealer Resource Center.
2. Under "Step 1 - Select a File," select the **Browse** key. Locate the Boot Block software file containing the previously downloaded GTX 3X5/3X5R software.
3. Under "Step 2 - Upload Options," select the options to be updated.
4. Under "Step 3 - Start Upload," select the **Upload** key.
5. Wait for the upload to complete. Individual files will be marked as complete as they are installed.
6. Under "Step 1 - Select a File," select the **Browse** key. Locate the Main System software file containing the previously downloaded GTX 3X5/3X5R software.
7. Under "Step 2 - Upload Options," select the "In File" versions to be updated.
8. Under "Step 3 - Start Upload," select the **Upload** key.
9. Wait for the upload to complete. Individual files will be marked as complete as they are installed.
10. After successful completion, verify that the correct software versions and part numbers display on the ***Transponder*** page of the Product Data group.
    a. To view the Product Data group, it may be necessary to exit the ***Software Upload*** page and select **Configure Transponder**. Refer to Figure 7-4.

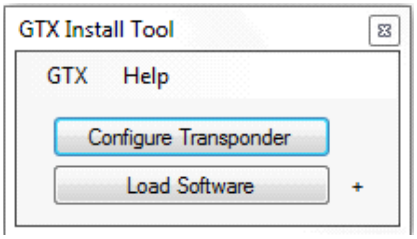

Figure 7-4 Install Tool Dialog Box

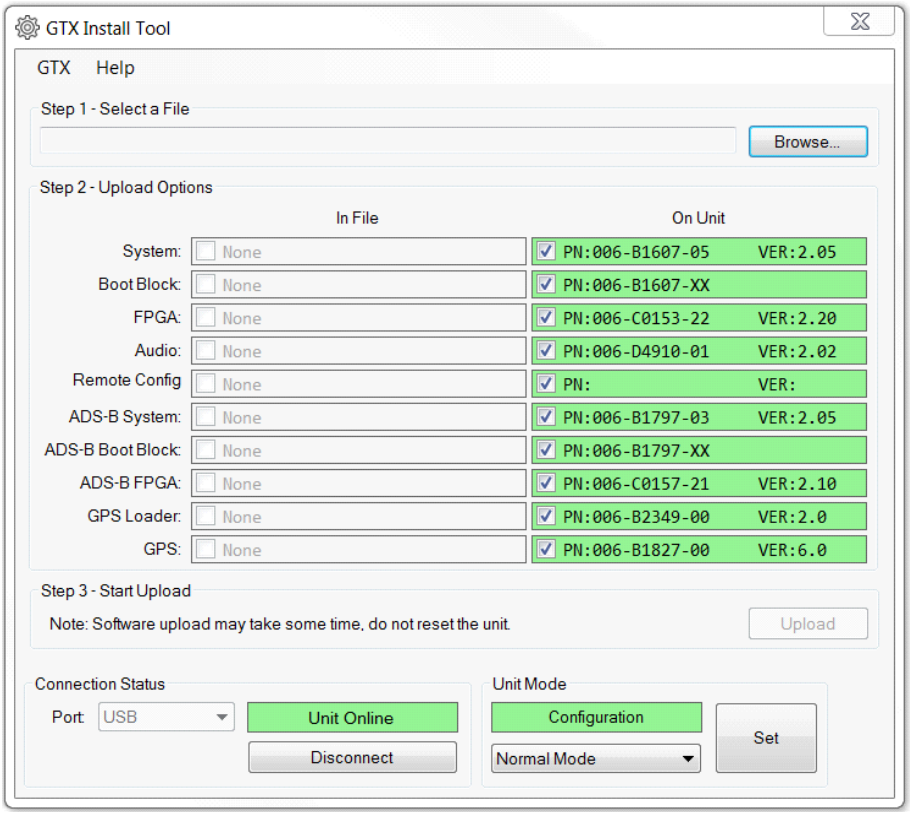

Figure 7-5 GTX 3X5 Install Tool Software Upload Page

8 SYSTEM CONFIGURATION AND CHECKOUT

8.1 Overview 8-2
8.2 System Checkout 8-2
8.3 Configuration 8-2
8.3.1 GTX 3X5 Configuration 8-2
8.3.2 GTX 3X5R Configuration (GTN 6XX/7XX/Xi) 8-2
8.4 GTX Test 8-3
8.4.1 Airborne Mode 8-3
8.4.2 Regulatory Test 8-4
8.4.3 ADS-B Out Test 8-4
8.4.4 Traffic Annunciator Test (If Installed) 8-5

8.1 Overview

NOTE

EMI Testing is required as part of the post-installation checkout. It is not required as part of regular maintenance.

This section contains instructions for configuring the GTX, as well as checks to ensure the system is properly installed and functioning correctly. The steps that are not applicable to a particular installation may be skipped.

8.2 System Checkout

Original GTX is Re-Installed

If the original GTX is being re-installed, configuration and software loading are not required. Continue to the GTX Test described in Section 8.4.

New, Repaired, or Exchanged GTX is Installed

If a new, repaired, or exchanged GTX is installed, AML approved software (refer to Section 7.1 and Section 7.2) must be loaded to the unit.

8.3 Configuration

NOTE

Ensure the Post-Installation Checkout Log remains with the rotorcraft permanent records upon completion of any maintenance activities.

Retrieve the Post-Installation Checkout Log from the rotorcraft permanent records. For the maintenance activities that repaired or replaced the previous GTX, verify the configuration of the GTX as defined by the data contained in the Post-Installation Checkout Log.

8.3.1 GTX 3X5 Configuration

Hold down the **ENT** key and press the **ON** key to access the configuration pages. The **FUNC** key sequences forward through the configuration pages. The **CLR** key reverses through the pages. The **8** or **9** key scrolls up or down through the items on each configuration page. The **CRSR** key highlights selectable fields on each page. When a field is highlighted, the **0** – **9** keys enter numeric data and the **8** or **9** keys move through list selections. Press the **ENT** key to accept changes. When a field is highlighted, pressing the **FUNC** key moves to the next configuration page without saving the changes.

Changes made through the configuration pages are stored internally in the GTX 3X5 unit and in the configuration module located in the rack connector backshell. To exit the configuration pages, turn the power off. Then turn on again (without holding the **ENT** key) for normal operation.

8.3.2 GTX 3X5R Configuration (GTN 6XX/7XX/Xi)

For GTX 3X5R installations interfacing to a GTN 6XX/7XX/Xi, configuration of the GTX is accomplished through the GTX Installation Tool. Within the GTX Installation Tool, an Offline mode is available under the GTX menu that allows configuration as if a unit is connected. This allows for the saving, loading, and generating summaries of configuration. Refer to Section 7.2 for instructions on downloading, installing, and connecting the installation tool to the GTX 3X5/3X5R unit.

8.4 GTX Test

NOTE

For dual transponder installations, the procedures contained in this section must be completed for each installed transponder.

Operation of the GTX 3X5 is accomplished using the faceplate of the unit. Refer to Section 3.1for details. The GTX 3X5R is controlled using the GTN 6XX/7XX/Xi. Refer to Section 3.2 for details. Refer to the operational documents listed in Table 1-1 for basic GTX operation.

8.4.1 Airborne Mode

The transponder must be placed in an airborne state to reply to any Mode A or Mode C interrogations. The GTX uses advanced Air/Ground logic to determine the state of the transponder. This logic must be temporarily defeated in order to place the transponder in an airborne state for testing. To place the transponder into an airborne state, perform the following applicable procedure.

Panel-Mounted Transponder

1. Start the GTX in Ground Test mode (hold the **CRSR** key and press the **ON** key).
2. "GROUND TEST MODE" alert message will be displayed on the GTX 3X5 message screen.

Remote-Mounted Transponder (GTN 6XX/7XX/Xi Interface)

NOTE

A GTX or GTN 6XX/7XX/Xi in Ground Test mode or Airborne Test mode will automatically return to normal operation of the Air/Ground logic when the unit is powered off and then turned on in Normal mode. When the unit is in Ground Test or Airborne Test mode, an alert message will be annunciated on the GTX or GTN screen.

1. Start the GTN 6XX/7XX/Xi in Configuration mode (hold the **HOME** key while cycling power).
2. Navigate to the ***XPDR 1 Installation Settings*** page.
   a. Select **External Systems**.
   b. Select **XPDR**.
3. Press the **Force Airborne Test** key.
4. Restart the GTN 6XX/7XX/Xi in Normal mode.

Remote-Mounted Transponder (GTX 3X5R Only)

NOTE

Airborne Test mode is for testing purposes only. Once testing is complete, either return the collective switch to original settings or remove the GTX from Ground Test mode.

1. Connect the GTX 3X5 installation tool to GTX 3X5R unit.
2. Place unit into Ground Test mode located on the ***State*** page.

8.4.2 Regulatory Test

With the transponder operating in Normal mode and in an Airborne or Ground Test state (refer to Section 8.4.1), the following regulatory tests are required to be performed every 24 calendar months, or any time the transponder is removed, replaced, or modified.

1. Altitude reporting equipment tests in accordance with 14 CFR Part 91.411 and Part 43 Appendix E.
2. ATC transponder tests and inspections in accordance with 14 CFR Part 91.413 and Part 43 Appendix F.

These regulatory tests require the use of a Mode S transponder ramp tester, such as an Aeroflex IFR-6000 or TIC TR-220. Specific instructions for operating the ramp tester are contained in the applicable operator's manual.

8.4.3 ADS-B Out Test

NOTE

Software version 5.30 or later is required on the TR-220.

The following ADS-B Out parameters must be verified in accordance with Title 14 of the Code of Federal Regulations (14 CFR) § 91.227 any time the position source (GPS) is replaced/modified. The test is performed using a transponder ramp test set, such as the Aeroflex IFR-6000 or TIC TR-220. For instructions on operating the ramp tester, refer to the manufacturer's documentation.

1. Ensure the rotorcraft is in a location where a GPS signal can be received (i.e., outdoors with a clear view of the sky).
2. Power on the rotorcraft/avionics and ensure that the GTX is powered on.
3. If the GTX is configured for pilot control of the ADS-B transmitter, ensure ADS-B TX is selected *ON*.
4. Temporarily put the GTX into Airborne mode. Refer to Section 8.4.1.
5. If dual GPS sources are connected to the GTX, each GPS source must be checked separately by disabling the GPS source not being checked. Disable the GPS source not being checked by covering the GPS antenna or removing power from that navigator. Verify that the GPS source not being checked is no longer receiving satellite data.
6. Ensure the GPS source being checked has acquired a position.
7. Select ALT mode on the GTX.
8. Using the transponder test set, verify the following ADS-B Out parameters are being transmitted:
   - NACv ≥ 1
   - SDA ≥ 2
   - SIL ≥ 3
   - NACp ≥ 8
   - NIC ≥ 7
9. If dual GPS sources are connected to the GTX, repeat steps 5 through 8 for the other GPS source.

10. Revert the GTX to its previous configuration as follows:
    a. If a connected air/ground switch was defeated in step 4, then place the connected switch back to the on-ground position.
    b. If the GTX squat switch configuration settings were changed in step 4, revert the GTX settings back to the previous configuration.
11. Select STBY mode on the GTX.

If no other service is to be performed, continue to the return to service checks in Section 9.1.

8.4.4 Traffic Annunciator Test (If Installed)

To test the annunciator, press the **Traffic Test** key on the GTX 3X5 Install Tool ***State*** page, and verify that the "Traffic" annunciator illuminates.

9 SYSTEM RETURN TO SERVICE

After removing and re-installing or replacing the GTX 3X5, perform the system checkout procedures in Section 8.2.

9.1 Maintenance Records

After performing the required return to service procedures, a record of maintenance should be provided to the owner/operator in accordance with 14 CFR 43.9 and 14 CFR 91.417.

The following should be provided in the maintenance record entry:

- Part number and version number of any software updates performed during maintenance
- Part number and serial number of any LRU that was replaced
- Any other applicable information related to the maintenance work performed on the rotorcraft

APPENDIX A INSTALLATION-SPECIFIC INFORMATION

A.1 Rotorcraft-Specific Information A-2
A.2 Equipment Interfaced to the GTX A-4
A.3 GTX 3X5 Airframe-Specific Installation A-11
A.3.1 Airbus Helicopters AS-350, AS-350B, AS-350B2, AS-350B3, AS-350BA, and AS-350D A-12
A.3.2 Airbus Helicopters EC-120B A-13
A.3.3 Airbus Helicopters EC-130T2 and EC-130B4 ..... A-14
A.3.4 Airbus Helicopters EC-135, EC-135P1, EC-135P2, EC-135P2+, EC-135P3, EC-135T1, EC-135T2, and EC-135T2+, EC-135T3 ..... A-15
A.3.5 Agusta A109, A109A, A109A II, A109C, A109K2, A109E, A109S, AW109SP, A119, and AW119 MKII A-16
A.3.6 Bell 206A and 206B A-17
A.3.7 Bell 206L, 206L-1, 206L-3, and 206L-4 ..... A-18
A.3.8 Bell 407 ..... A-19
A.3.9 Bell 427 and 429 ..... A-20
A.3.10 Enstrom Helicopters 480, 480B, F-28, F-28A, F-28C, 280, 280C, 280F, and 280FX A-21
A.3.11 MD Helicopters 369, 369D, 369E, 369F, 369FF, and 500N A-22
A.3.12 MD Helicopter 600N A-23
A.3.13 Robinson R22, R22 Alpha, R22 Beta, and R22 Mariner A-24
A.3.14 Robinson R44 and R44 II A-25
A.3.15 Robinson R66 ..... A-26
A.3.16 Sikorsky 269, 269C, 269C-1, and 269D A-27
A.4 GTX 3X5 Configuration Log A-28
A.5 GTX 335/335R Configuration Log A-29
A.6 GTX 345/345R Configuration Log A-30

A.1 Rotorcraft-Specific Information

ROTOCRAFT SPECIFIC INFORMATION

GENERAL INFORMATION

Date:_____/_____/_____ By: _____

ROTOCRAFT

ROTOCRAFT MAKE: _____

ROTOCRAFT MODEL: _____

ROTOCRAFT SERIAL #: _____

ROTOCRAFT REG. #: _____

HEX ADDRESS: _____

GTX #1

Unit P/N: _____ Mod Level: _____

Unit Model: _____ Serial #: _____

GTX #2 **[N/A]** ❑

Unit P/N: _____ Mod Level: _____

Unit Model: _____ Serial #: _____

Figure A-1 Rotorcraft-Specific Information
Sheet 1 of 2

ELECTRICAL LOAD ANALYSIS

ITEMS REMOVED FROM ROTOCRAFT	ELECTRICAL LOAD (A) [1]	COMMENT
Subtotal:		

ITEMS ADDED TO ROTOCRAFT	ELECTRICAL LOAD (A) [1]	COMMENT
Subtotal		

Net Change in Bus Load:	

[1] Use typical current draw when performing this calculation.

Figure A-1 Rotorcraft-Specific Information
Sheet 2 of 2

A.2 Equipment Interfaced to the GTX

NOTE

This information is optional and is not required to be completed or maintained with the rotorcraft records.

Document the equipment that is interfaced to the GTX. Use the following guidance when filling out the information. When applicable, check that the correct LRU is used for the interface or write in the GTX port number or numbers used for the interface. This is generally applicable only to serial ports, such as RS-232 and ARINC 429.

GTX #1 INTERFACED EQUIPMENT

Manufacturer/Model	GPS Source	Remote Control & Display	ADS-B In Traffic/ Weather Display	Altitude Source	Heading Source	Radar Altitude Source	External Traffic (TAS/TCAS) Source
Garmin GTX 3X5( )							
Garmin GTN 6XX/7XX/Xi							
Garmin GNS 400W/500W							
Garmin G500H (GDU 620)							
Garmin GDL 69A (SXM)							
Garmin GDC 74( )							
Garmin GAE							
ACK Tech A-30							
Icarus Instruments 3000							
Sandia SAE 5-35							
Shadin 8800T							
Shadin F/ADC-200							
Shadin F/ADC-2000							
Shadin ADC 200+							
Trans-Cal Industries IA-RS232-X							
Trans-Cal Industries SSD120							

Figure A-2 Interfaced Equipment Table
Sheet 1 of 6

Manufacturer/Model	GPS Source	Remote Control & Display	ADS-B In Traffic/ Weather Display	Altitude Source	Heading Source	Radar Altitude Source	External Traffic (TAS/TCAS) Source	Audio Panel	Data Forwarding
Aspen 1000H-PFD									
Avidyne EXP 5000									
Collins AHS-85E									
Bendix King EFS 40/50 (SG465)									
Sandel SN 3308									
Sandel SN 3500									
Garmin GRS 77( )									
Garmin GAD 42( )									
Free Flight RA-4500									
Honeywell KRA 405B									
Garmin GRA 55/5500									
Avidyne (Ryan) TAS 6XX (9900BX)									
L3 Skywatch SKY497									
L3 Skywatch SKY899									
Honeywell (Bendix King) KTA 870/810 KMH 880/820									
Honeywell (Bendix King) KTA 970/910 KMH 980/920									
Garmin GTS 8XX (800/820/850)									
Garmin GTS Processor (825/855)									
Garmin SL 10(___)									
Garmin SL 15(___)									
Garmin GMA 35( )									

Figure A-2 Interfaced Equipment Table
Sheet 2 of 6

Manufacturer/Model	GPS Source	Remote Control & Display	ADS-B In Traffic/ Weather Display	Altitude Source	Heading Source	Radar Altitude Source	External Traffic (TAS/TCAS) Source	Audio Panel	Data Forwarding
Garmin GMA 340 / 347									
Garmin GMA 350									
Garmin GMA 1347									
Honeywell (Bendix King) KMA 24									
Honeywell (Bendix King) KMA 24H-70/71									
Honeywell (Bendix King) KMA 26									
Honeywell (Bendix King) KMA 28									
PS Engineering PMA 6000									
PS Engineering PMA 7000									
PS Engineering PMA 8000									
Techinsonics A710 / A711									
Becker DVCS 6100									
NAT AMS 42 / AMS 44									
NAT AMS 50									

Figure A-2 Interfaced Equipment Table
Sheet 3 of 6

GTX #2 INTERFACED EQUIPMENT

Manufacturer/Model	GPS Source	Remote Control & Display	ADS-B In Traffic/ Weather Display	Altitude Source	Heading Source	Radar Altitude Source	External Traffic (TAS/TCAS) Source	Audio Panel	Data Forwarding
Garmin GTX 3X5()									
Garmin GTN 6XX/7XX/Xi									
Garmin GNS 400W/500W									
Garmin G500H (GDU 620)									
Garmin GDL 69A (SXM)									
Garmin GDC 74()									
Garmin GAE									
ACK Tech A-30									
Icarus Instruments 3000									
Sandia SAE 5-35									
Shadin 8800T									
Shadin F/ADC-200									
Shadin F/ADC-2000									
Shadin ADC 200+									
Trans-Cal Industries IA-RS232-X									
Trans-Cal Industries SSD120									
B & D 90004-003									
Honeywell (Bendix King) KDC 281									
Honeywell (Bendix King) KDC 481									
Aspen 1000-PFD									

Figure A-2 Interfaced Equipment Table
Sheet 4 of 6

Manufacturer/Model	GPS Source	Remote Control & Display	ADS-B In Traffic/ Weather Display	Altitude Source	Heading Source	Radar Altitude Source	External Traffic (TAS/TCAS) Source	Audio Panel	Data Forwarding
Aspen 1000H-PFD									
Avidyne EXP 5000									
Collins AHS-85E									
Bendix King EFS 40/50 (SG465)									
Sandel SN 3308									
Sandel SN 3500									
Garmin GRS 77()									
Garmin GAD 42()									
Free Flight RA-4500									
Honeywell KRA 405B									
Garmin GRA 55/5500									
Avidyne (Ryan) TAS 6XX (9900BX)									
L3 Skywatch SKY497									
L3 Skywatch SKY899									
Honeywell (Bendix King) KTA 870/810 KMH 880/820									
Honeywell (Bendix King) KTA 970/910 KMH 980/920									
Garmin GTS 8XX (800/820/850)									
Garmin GTS Processor (825/855)									
Garmin SL 10(___)									
Garmin SL 15(___)									
Garmin GMA 35( )									

Figure A-2 Interfaced Equipment Table
Sheet 5 of 6

Manufacturer/Model	GPS Source	Remote Control & Display	ADS-B In Traffic/ Weather Display	Altitude Source	Heading Source	Radar Altitude Source	External Traffic (TAS/TCAS) Source	Audio Panel	Data Forwarding
Garmin GMA 340 / 347									
Garmin GMA 350									
Garmin GMA 1347									
Honeywell (Bendix King) KMA 24									
Honeywell (Bendix King) KMA 24H-70/71									
Honeywell (Bendix King) KMA 26									
Honeywell (Bendix King) KMA 28									
PS Engineering PMA 6000									
PS Engineering PMA 7000									
PS Engineering PMA 8000									
Techinsonics A710 / A711									
Becker DVCS 6100									
NAT AMS 42 / AMS 44									
NAT AMS 50									

Figure A-2 Interfaced Equipment Table
Sheet 6 of 6

A.3 GTX 3X5 Airframe-Specific Installation

For each applicable diagram in this section:

- ❑ Document the unit location as installed in the aircraft, including W/L, B/L, F/S, and item weight.
- ❑ Annotate the LRU location on the provided rotorcraft diagram. Include the location of all antennas connected to the GTX 3X5 transponder. Shaded boxes depict common installation locations.
- ❑ Annotate the GTX wire harness routing on the provided rotorcraft diagram. Include the cable routing for all antennas connected to the GTX 3X5 transponder.
- ❑ Annotate the location of the circuit breaker for the GTX 3X5 transponder.
- ❑ Document all steps required to access the LRU. This is necessary if the procedure to access the LRU is outside the scope of the rotorcraft manufacturer's technical data.

A.3.1 Airbus Helicopters AS-350, AS-350B, AS-350B2, AS-350B3, AS-350BA, and AS-350D

Installation Location	W/L	B/L	F/S	Item Weight
❑ Instrument Panel (per Figure 6-7)				
❑ Avionics Console/Instrument Panel Support (per Figure 6-7)				
❑ Remote ❑ Horizontal Mount (per Figure 6-8) ❑ Vertical Mount (per Figure 6-9)				
For instructions on how to access installation locations, refer to the rotorcraft manufacturer's technical data or document. Document all necessary steps in the space below.				

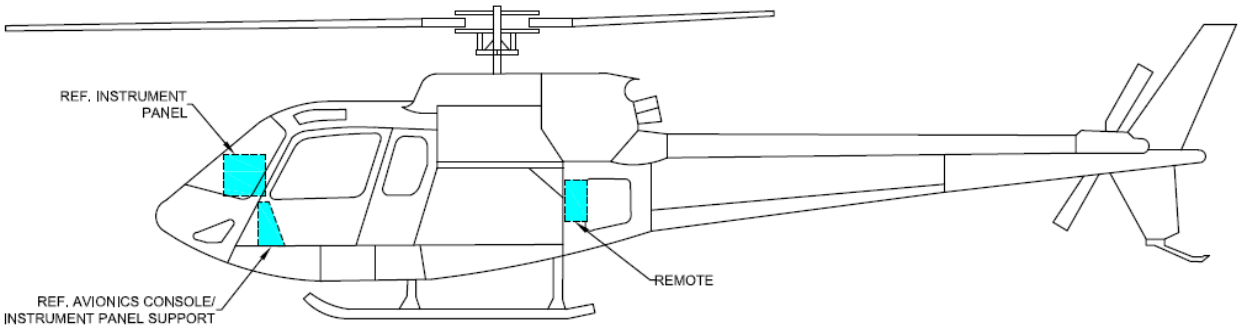

AIRBUS HELICOPTERS AS-350
MODEL AS-350B2 SHOWN
MODELS AS-350B, AS-350B3, AS-350BA, and AS-350D SIMILAR

A.3.2 Airbus Helicopters EC-120B

Installation Location	W/L	B/L	F/S	Item Weight
❑ Instrument Panel (per Figure 6-7)				
❑ Avionics Console/Instrument Panel Support (per Figure 6-7)				
❑ Remote ❑ Horizontal Mount (per Figure 6-8) ❑ Vertical Mount (per Figure 6-9)				
For instructions on how to access installation locations, refer to the rotorcraft manufacturer's technical data or document. Document all necessary steps in the space below.				

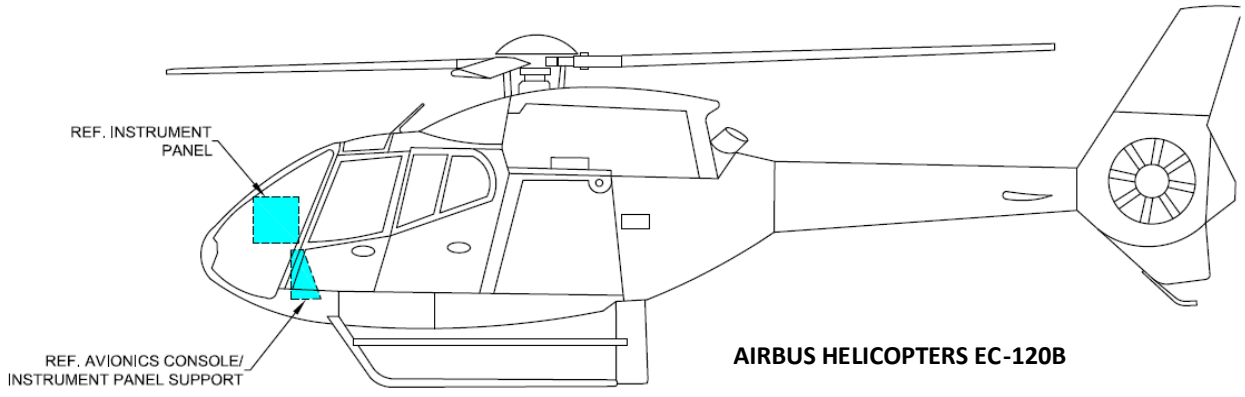

AIRBUS HELICOPTERS EC-120B

A.3.3 Airbus Helicopters EC-130T2 and EC-130B4

Installation Location	W/L	B/L	F/S	Item Weight
❑ Instrument Panel (per Figure 6-7)				
❑ Avionics Console/Instrument Panel Support (per Figure 6-7)				
❑ Remote ❑ Horizontal Mount (per Figure 6-8) ❑ Vertical Mount (per Figure 6-9)				

For instructions on how to access installation locations, refer to the rotorcraft manufacturer's technical data or document. Document all necessary steps in the space below.

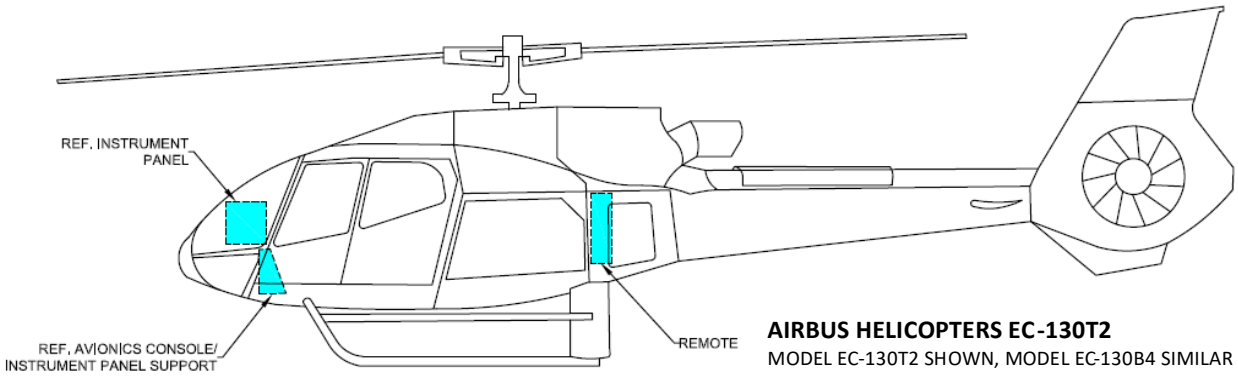

AIRBUS HELICOPTERS EC-130T2
MODEL EC-130T2 SHOWN, MODEL EC-130B4 SIMILAR

A.3.4 Airbus Helicopters EC-135, EC-135P1, EC-135P2, EC-135P2+, EC-135P3, EC-135T1, EC-135T2, and EC-135T2+, EC-135T3

Installation Location	W/L	B/L	F/S	Item Weight
❑ Instrument Panel (per Figure 6-7)				
❑ Avionics Console/Instrument Panel Support (per Figure 6-7)				
❑ Remote ❑ Horizontal Mount (per Figure 6-8) ❑ Vertical Mount (per Figure 6-9)				
For instructions on how to access installation locations, refer to the rotorcraft manufacturer's technical data or document. Document all necessary steps in the space below.				

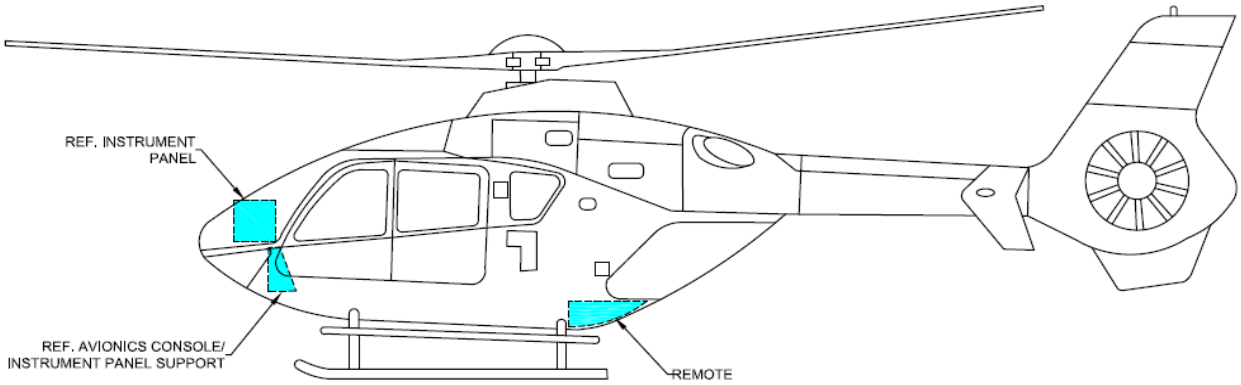

AIRBUS HELICOPTERS EC-135

MODEL EC-135P1 SHOWN
MODELS EC-135P2, EC-135P2+, EC-135P3, EC-135T1, EC-135T2, EC135T2+, EC-135T3 SIMILAR

A.3.5 Agusta A109, A109A, A109A II, A109C, A109K2, A109E, A109S, AW109SP, A119, and AW119 MKII

Installation Location	W/L	B/L	F/S	Item Weight
❑ Instrument Panel (per Figure 6-7)				
❑ Avionics Console/Instrument Panel Support (per Figure 6-7)				
❑ Remote ❑ Horizontal Mount (per Figure 6-8) ❑ Vertical Mount (per Figure 6-9)				
For instructions on how to access installation locations, refer to the rotorcraft manufacturer's technical data or document. Document all necessary steps in the space below.				

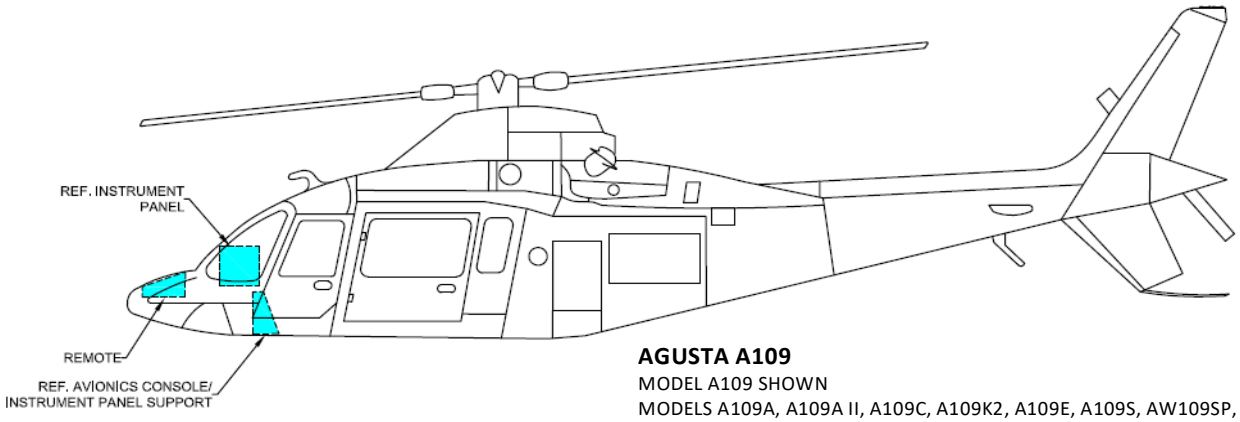

AGUSTA A109
MODEL A109 SHOWN
MODELS A109A, A109A II, A109C, A109K2, A109E, A109S, AW109SP, A119, AW119 MKII SIMILAR

A.3.6 Bell 206A and 206B

Installation Location	W/L	B/L	F/S	Item Weight
❑ Instrument Panel (per Figure 6-7)				
❑ Avionics Console/Instrument Panel Support (per Figure 6-7)				
❑ Remote ❑ Horizontal Mount (per Figure 6-8) ❑ Vertical Mount (per Figure 6-9)				
For instructions on how to access installation locations, refer to the rotorcraft manufacturer's technical data or document. Document all necessary steps in the space below.				

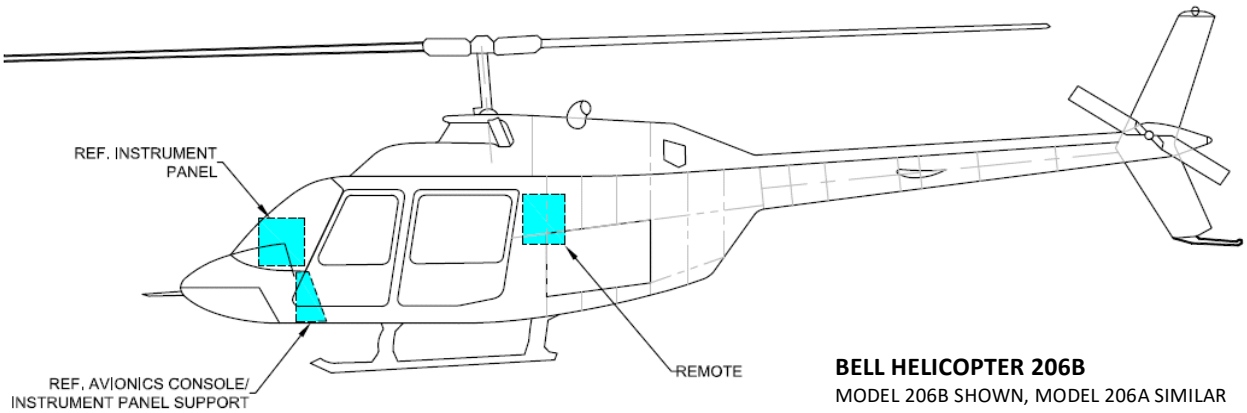

BELL HELICOPTER 206B
MODEL 206B SHOWN, MODEL 206A SIMILAR

A.3.7 Bell 206L, 206L-1, 206L-3, and 206L-4

Installation Location	W/L	B/L	F/S	Item Weight
❑ Instrument Panel (per Figure 6-7)				
❑ Avionics Console/Instrument Panel Support (per Figure 6-7)				
❑ Remote ❑ Horizontal Mount (per Figure 6-8) ❑ Vertical Mount (per Figure 6-9)				
For instructions on how to access installation locations, refer to the rotorcraft manufacturer's technical data or document. Document all necessary steps in the space below.				

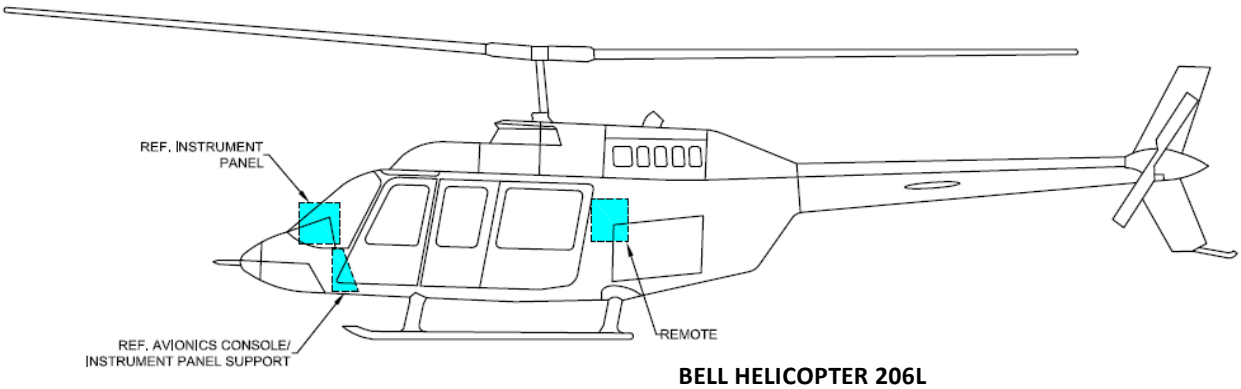

BELL HELICOPTER 206L
MODEL 206L SHOWN, MODELS 206L-1, 206L-3, 206L-4 SIMILAR

A.3.8 Bell 407

Installation Location	W/L	B/L	F/S	Item Weight
❑ Instrument Panel (per Figure 6-7)				
❑ Avionics Console/Instrument Panel Support (per Figure 6-7)				
❑ Remote ❑ Horizontal Mount (per Figure 6-8) ❑ Vertical Mount (per Figure 6-9)				
For instructions on how to access installation locations, refer to the rotorcraft manufacturer's technical data or document. Document all necessary steps in the space below.				

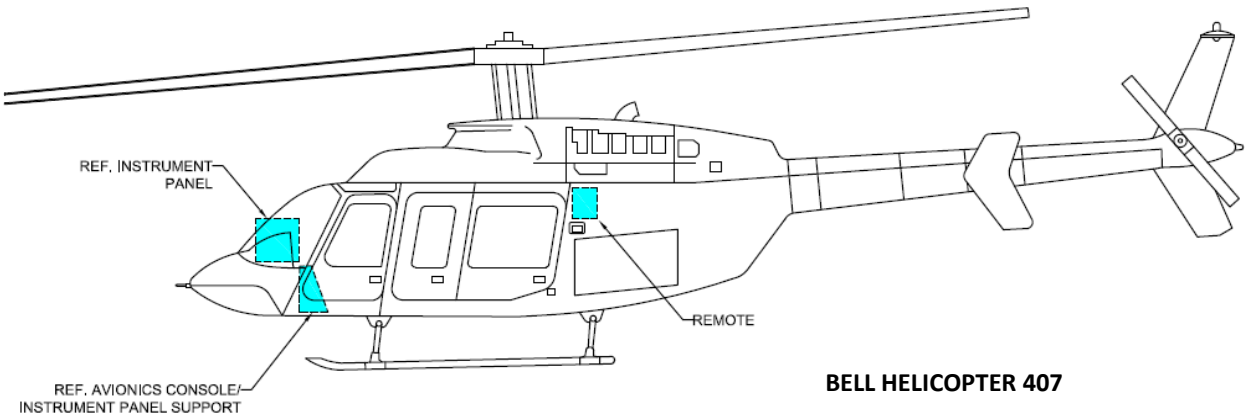

BELL HELICOPTER 407

A.3.9 Bell 427 and 429

Installation Location	W/L	B/L	F/S	Item Weight
❑ Instrument Panel (per Figure 6-7)				
❑ Avionics Console/Instrument Panel Support (per Figure 6-7)				
❑ Remote ❑ Horizontal Mount (per Figure 6-8) ❑ Vertical Mount (per Figure 6-9)				
For instructions on how to access installation locations, refer to the rotorcraft manufacturer's technical data or document. Document all necessary steps in the space below.				

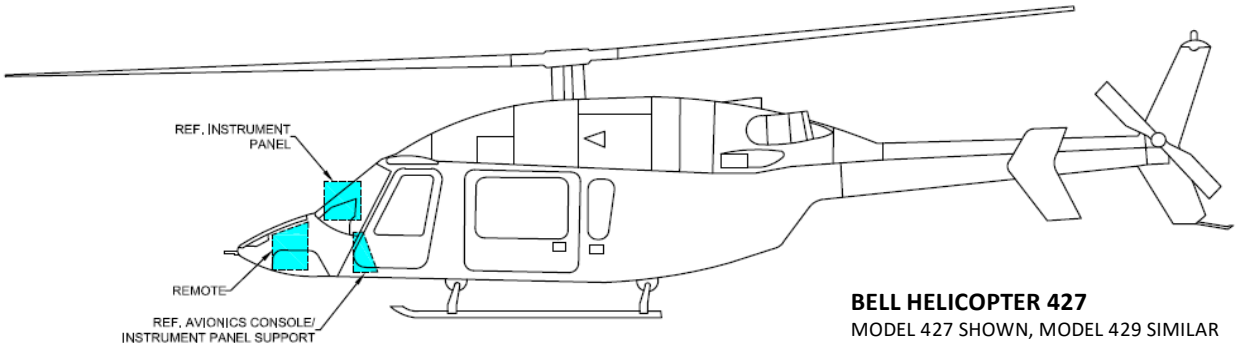

BELL HELICOPTER 427
MODEL 427 SHOWN, MODEL 429 SIMILAR

A.3.10 Enstrom Helicopters 480, 480B, F-28, F-28A, F-28C, 280, 280C, 280F, and 280FX

Installation Location	W/L	B/L	F/S	Item Weight
❑ Instrument Panel (per Figure 6-7)				
❑ Avionics Console/Instrument Panel Support (per Figure 6-7)				
❑ Remote ❑ Horizontal Mount (per Figure 6-8) ❑ Vertical Mount (per Figure 6-9)				
For instructions on how to access installation locations, refer to the rotorcraft manufacturer's technical data or document. Document all necessary steps in the space below.				

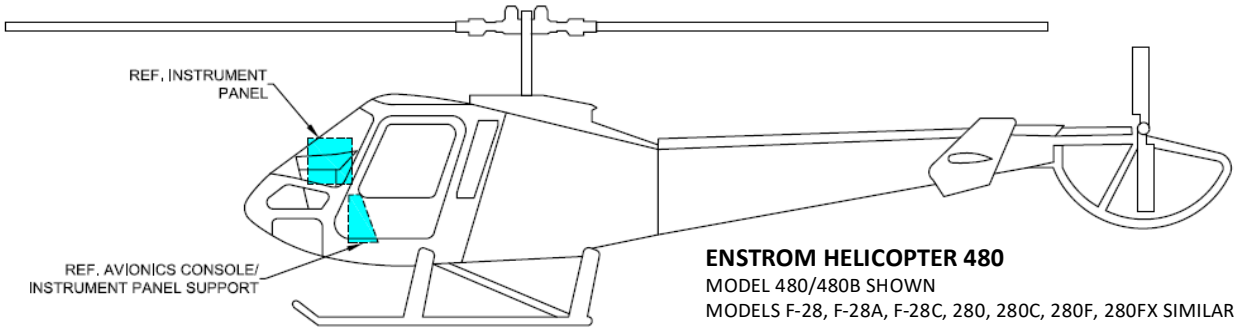

ENSTROM HELICOPTER 480
MODEL 480/480B SHOWN
MODELS F-28, F-28A, F-28C, 280, 280C, 280F, 280FX SIMILAR

A.3.11 MD Helicopters 369, 369D, 369E, 369F, 369FF, and 500N

Installation Location	W/L	B/L	F/S	Item Weight
❑ Instrument Panel (per Figure 6-7)				
❑ Avionics Console/Instrument Panel Support (per Figure 6-7)				
❑ Remote ❑ Horizontal Mount (per Figure 6-8) ❑ Vertical Mount (per Figure 6-9)				
For instructions on how to access installation locations, refer to the rotorcraft manufacturer's technical data or document. Document all necessary steps in the space below.				

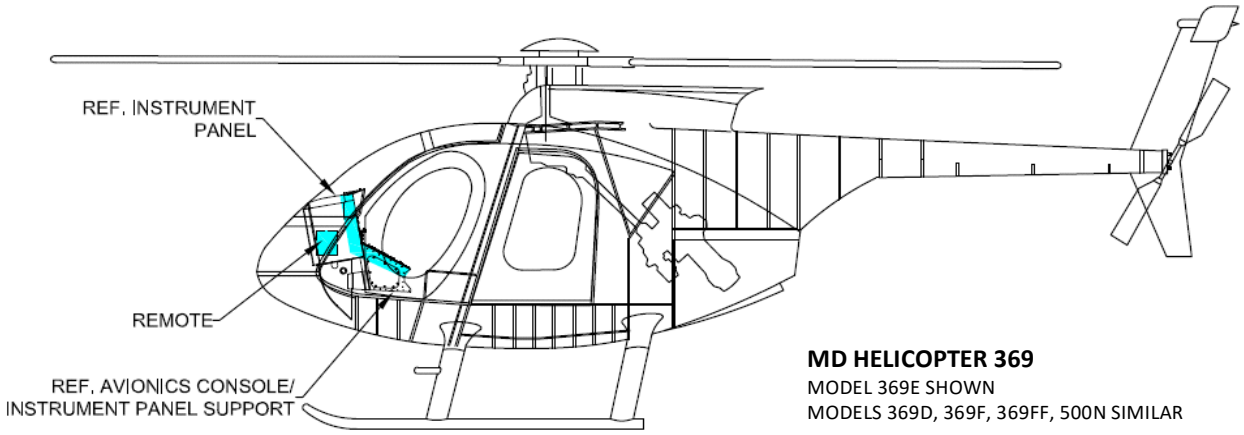

MD HELICOPTER 369
MODEL 369E SHOWN
MODELS 369D, 369F, 369FF, 500N SIMILAR

A.3.12 MD Helicopter 600N

Installation Location	W/L	B/L	F/S	Item Weight
❑ Instrument Panel (per Figure 6-7)				
❑ Avionics Console/Instrument Panel Support (per Figure 6-7)				
❑ Remote ❑ Horizontal Mount (per Figure 6-8) ❑ Vertical Mount (per Figure 6-9)				
For instructions on how to access installation locations, refer to the rotorcraft manufacturer's technical data or document. Document all necessary steps in the space below.				

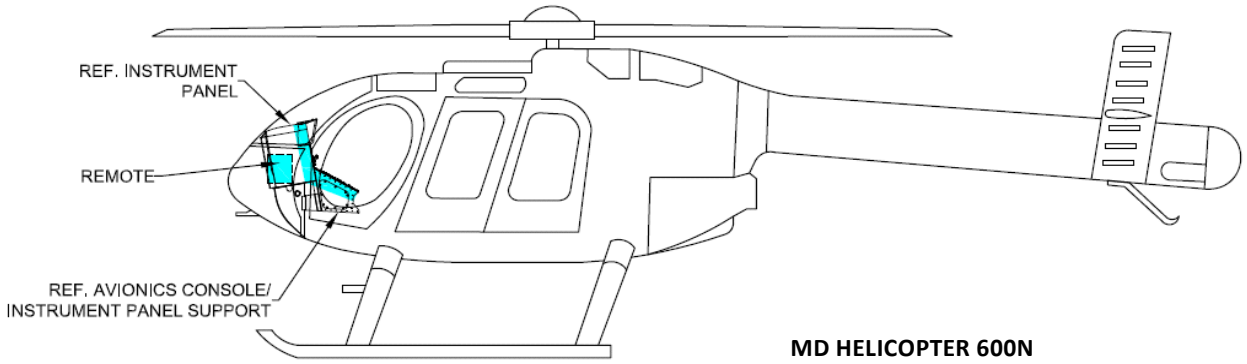

MD HELICOPTER 600N

A.3.13 Robinson R22, R22 Alpha, R22 Beta, and R22 Mariner

Installation Location	W/L	B/L	F/S	Item Weight
❑ Instrument Panel (per Figure 6-7)				
❑ Avionics Console/Instrument Panel Support (per Figure 6-7)				
❑ Remote ❑ Horizontal Mount (per Figure 6-8) ❑ Vertical Mount (per Figure 6-9)				
For instructions on how to access installation locations, refer to the rotorcraft manufacturer's technical data or document. Document all necessary steps in the space below.				

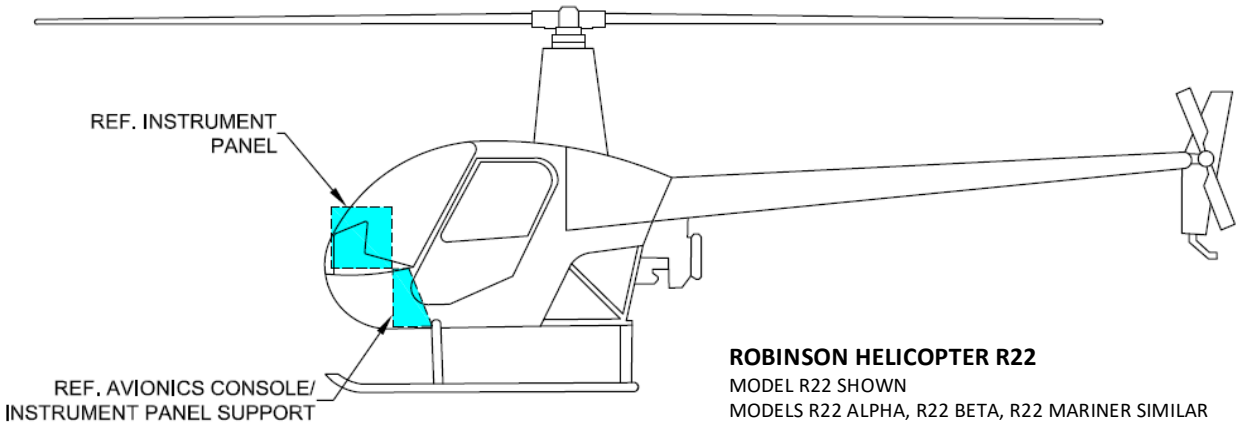

ROBINSON HELICOPTER R22
MODEL R22 SHOWN
MODELS R22 ALPHA, R22 BETA, R22 MARINER SIMILAR

A.3.14 Robinson R44 and R44 II

Installation Location	W/L	B/L	F/S	Item Weight
❑ Instrument Panel (per Figure 6-7)				
❑ Avionics Console/Instrument Panel Support (per Figure 6-7)				
❑ Remote ❑ Horizontal Mount (per Figure 6-8) ❑ Vertical Mount (per Figure 6-9)				
For instructions on how to access installation locations, refer to the rotorcraft manufacturer's technical data or document. Document all necessary steps in the space below.				

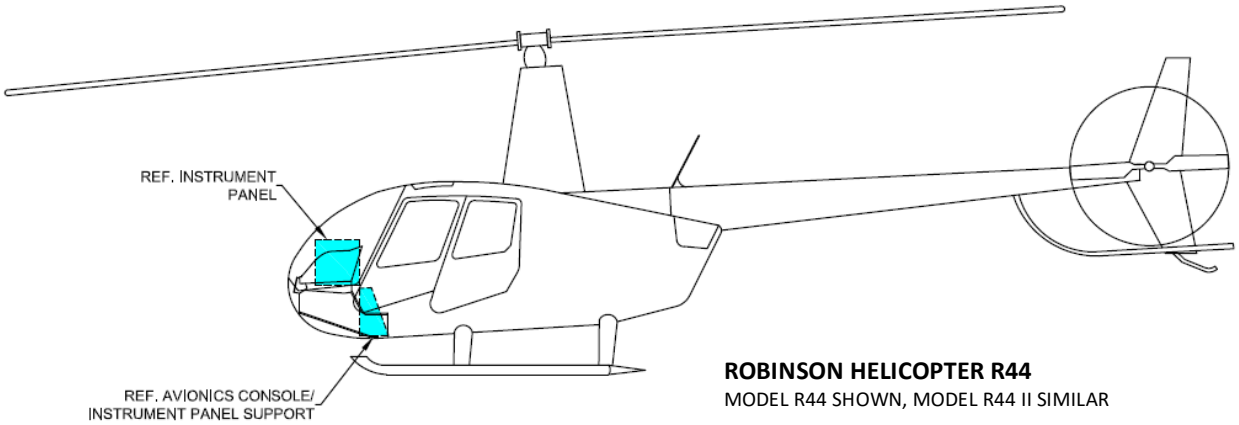

ROBINSON HELICOPTER R44
MODEL R44 SHOWN, MODEL R44 II SIMILAR

A.3.15 Robinson R66

Installation Location	W/L	B/L	F/S	Item Weight
❑ Instrument Panel (per Figure 6-7)				
❑ Avionics Console/Instrument Panel Support (per Figure 6-7)				
❑ Remote ❑ Horizontal Mount (per Figure 6-8) ❑ Vertical Mount (per Figure 6-9)				
For instructions on how to access installation locations, refer to the rotorcraft manufacturer's technical data or document. Document all necessary steps in the space below.				

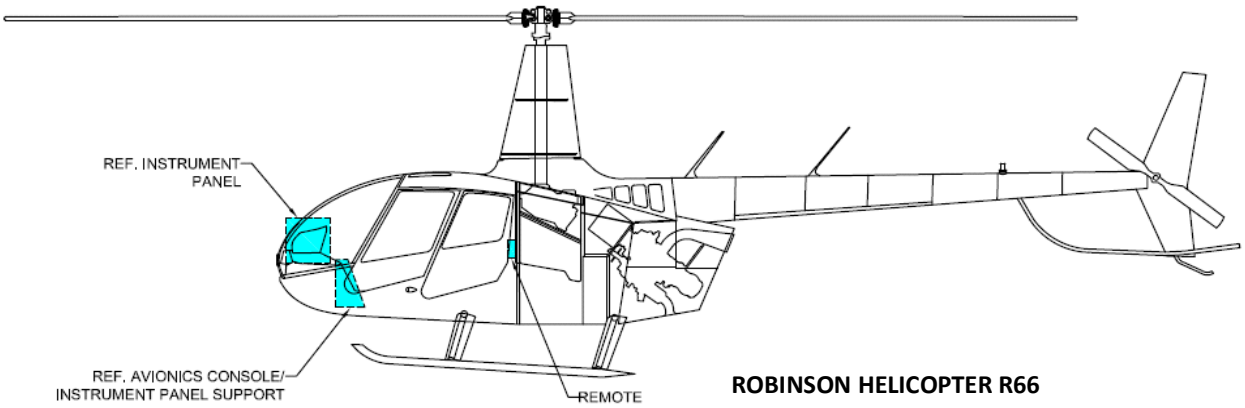

ROBINSON HELICOPTER R66

A.3.16 Sikorsky 269, 269C, 269C-1, and 269D

Installation Location	W/L	B/L	F/S	Item Weight
❑ Instrument Panel (per Figure 6-7)				
❑ Avionics Console/Instrument Panel Support (per Figure 6-7)				
❑ Remote ❑ Horizontal Mount (per Figure 6-8) ❑ Vertical Mount (per Figure 6-9)				
For instructions on how to access installation locations, refer to the rotorcraft manufacturer's technical data or document. Document all necessary steps in the space below.				

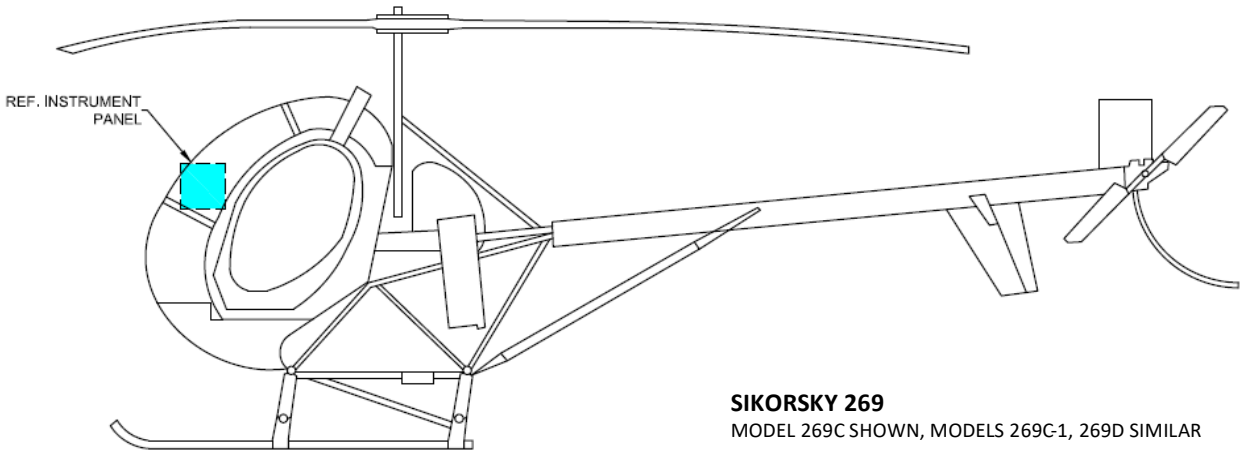

SIKORSKY 269
MODEL 269C SHOWN, MODELS 269C-1, 269D SIMILAR

A.4 GTX 3X5 Configuration Log

NOTE

This page applies to both GTX 335/335R and GTX 345/345R units. Each log must be completed for your specific installation.

A post-installation configuration log can be automatically generated using the install tool. This log includes the data recorded in Appendix Sections A.4, A.5, and A.6. To print the configuration log for the GTX 3X5, perform the following steps.

1. Select **GTX** and then select **Configuration**.
2. Select the **View Summary** option.
3. Select the **File** option.
4. Select the **Print** option.

If printer access is not available, the following post-installation configuration logs are provided for convenience.

RS-232 Configuration

Transponder #1
Port 1: Input _____
Output _____
Port 2: Input _____
Output _____
Port 3: Input _____
Output _____
Only available for GTX 345/345R
Port 4: Input _____
Output _____

Transponder #2
Port 1: Input _____
Output _____
Port 2: Input _____
Output _____
Port 3: Input _____
Output _____
Only available for GTX 345/345R
Port 4: Input _____
Output _____

ARINC 429 CONFIGURATION

Transponder #1
Port 1: Input _____ **Speed:** _____
Output _____ **Speed:** _____
Port 2: Input _____ **Speed:** _____

Transponder #2
Port 1: Input _____ **Speed:** _____
Output _____ **Speed:** _____
Port 2: Input _____ **Speed:** _____

DISCRETE					
INPUT			OUTPUT		
	FUNCTION	PIN		FUNCTION	PIN
☐	TIS-A SELECT		☐	TRANSPONDER FAIL #1	
☐	ALTITUDE DATA SELECT		☐	EXTERNAL SUPRESSION I/O	
☐	AUDIO INHIBIT #1		☐	REPLY ACTIVE	
☐	AUDIO INHIBIT #2		☐	TRANSPONDER FAIL #2	
☐	AIR DATA SELECT		☐	ALTITUDE ALERT ANNUNCIATE	
☐	SQUAT SWITCH		☐	ADS-B FUNCTION FAILURE	
☐	EXTERNAL IDENT SELECT		☐	TRAFFIC ALERT	
☐	EXTERNAL STANDBY SELECT		☐	TRAFFIC STANDBY/OPERATE	
☐	EXTERNAL SUPRESSION I/O		☐	TRAFFIC TEST	

A.5 GTX 335/335R Configuration Log

NOTE

A Post-Installation Configuration Log is available for the GTX 345/345R following this configuration log.

INSTALLATION SETTINGS

(All settings in this section must be the same for each installed transponder, where applicable.)

AUDIO

Audio Output: _____
Volume: _____
Voice: _____
Test Audio: _____
Altitude Alert: _____
Timer Expired Alert: _____
Traffic Alert: _____

UNIT

Altitude Units: _____
Temperature Units: _____
Altitude Alert Deviation: _____
Restore Pages On Power-Up: _____
Installation ID: _____
VFR ID: _____

DISP (Only for Panel Mounted units)

Display Backlight: _____
Minimum Level: _____
Photocell Transition: _____
Slope: _____
Offset: _____
Default Backlight Offset: _____
Keypad Backlight: _____
Minimum Level: _____
Lighting Bus Input VLTG: _____
Slope: _____
Offset: _____
Default Contrast Offset: _____

SNSR

OAT Sensor Installed: _____

GPS 1 SRC: _____
INTGRTY: _____
LAT OFST: _____
LON OFST: _____

Internal ALT Encoder Installed
Installed: _____
Ceiling: _____
Test Points: _____

Altitude Source 1: _____
Altitude Source 2: _____

GPS 2 SRC: _____
INTGRTY: _____
LAT OFST: _____
LON OFST: _____

Internal ALT Encoder Adjustment
TEST ALT: _____
Correction: _____
Measured: _____

ADSB

ACFT CATGRY: _____
ACTF MAX A/S: _____
1090ES OUT Control: _____
UAT OUT RMT Control: _____
Aircraft Tail Number: _____
Address: _____
Number: _____
ADS-B IN Processing: _____

Aircraft Length: _____
Aircraft Width: _____
1090ES IN Control: _____
UAT IN Capable: _____
Allow Pilot to edit FLT ID: _____
Default FLT ID: _____
FLT ID PREFIX: _____

A.6 GTX 345/345R Configuration Log

INSTALLATION SETTINGS

(All settings in this section must be the same for each installed transponder, where applicable.)

AUDIO

Audio Output: _____
Volume: _____
Voice: _____
Test Audio: _____
Altitude Alert: _____
Timer Expired Alert: _____
Traffic Alert: _____

UNIT

FIS-B Processing: _____
Installation ID: _____
VFR ID: _____
Bluetooth Control: _____
Altitude Units: _____
Temperature Units: _____
Altitude Alert Deviation: _____
Restore Pages On Power-Up: _____

DISP (Only for Panel Mounted units)

Display Backlight: _____
Minimum Level: _____
Photocell Transition: _____
Slope: _____
Offset: _____
Default Backlight Offset: _____
Keypad Backlight: _____
Minimum Level: _____
Lighting Bus Input VLTG: _____
Slope: _____
Offset: _____
Default Contrast Offset: _____

SNSR

OAT Sensor Installed: _____

GPS 1 SRC: _____
INTGRTY: _____
LAT OFST: _____
LON OFST: _____
Internal ALT Encoder Installed
Installed: _____
Ceiling: _____
Test Points: _____
Internal AHRS Orientation
Connectors: _____
Vent: _____
Yaw: _____
Altitude Source 1: _____
Altitude Source 2: _____
GPS 2 SRC: _____
INTGRTY: _____
LAT OFST: _____
LON OFST: _____
Internal ALT Encoder Adjustment
TEST ALT: _____
Correction: _____
Measured: _____

ADSB

ACFT CATGRY: _____
ACTF MAX A/S: _____
1090ES OUT Control: _____
UAT OUT RMT Control: _____
Aircraft Tail Number: _____
Address: _____
Number: _____
ADS-B IN Processing: _____
Aircraft Length: _____
Aircraft Width: _____
1090ES IN Control: _____
UAT IN Capable: _____
Allow Pilot to edit FLT ID: _____
Default FLT ID: _____
FLT ID PREFIX: _____

RS-422 Configuration (Only available for GTX 345/345R)

Transponder #1
Port 1: Output _____

Transponder #2
Port 1: Output _____

HSDB Configuration (Only available for GTX 345/345R)

Transponder #1
Port 1: _____
Port 2: _____

Transponder #2
Port 1: _____
Port 2: _____

APPENDIX B ELECTRICAL BONDING PROCEDURES

Refer to SAE ARP1870, Section 5 when surface preparation is required to achieve electrical bond.

The correct material finish is important when mating untreated or bare dissimilar metals. Materials must be galvanically-compatible. When corrosion protection is removed to make an electrical bond, any exposed area after the bond is completed must be protected again. Additional guidance can be found in AC 43.13-1B and SAE ARP1870.

The following general procedure is recommended to prepare an aluminum surface for proper electrical bonding:

1. Clean grounding location with solvent.
2. Remove non-conductive films or coatings from the grounding location.
3. Apply a chemical conversion coat, such as Alodine 1200, to the bare metal.
4. Once the chemical conversion coat is dry, clean the area.
5. Install bonding equipment at grounding location.
6. After the bond is complete, reapply a suitable film or coating to the surrounding area if any films or coatings were removed from the surface.

For a more detailed procedure, refer to SAE ARP1870, Sections 5.1 and 5.5.

When repair or replacement of the aluminum tape is required, use 3M 436, 438 or another adhesive-backed dead soft aluminum foil with a minimum 7.2 mils metal thickness. The maximum length-to-width ratio of the tape must not exceed 7:1 (i.e., maximum 7 inches in length for every 1 inch in width).

Additional requirements include:

1. The tape must have no tears in the joint or along the length of the tape.
2. The tape must be folded over twice onto itself when bonding to a metal part.
3. The tape must have clean metal-to-metal contact points with fasteners.
4. The tape must have maximum 2.5 mΩ direct current resistance between the rotorcraft ground plane.
5. Maintain the same tape width and routing when replacing the tape. For additional guidance, refer to AC 43.13-1B and SAE ARP1870, Sections 5.1 and 5.5.
6. Re-install the GTX 3X5 transponder unit in accordance with Section 3. Verify that the direct current (DC) resistance of electrical bond between the unit and rotorcraft ground plane is less than or equal to 2.5 mΩ.
7. When replacing the bonding strap, the strap length must not exceed 5 inches in length.
8. The strap must not loop back on itself and bend more than 45°. For guidance on bonding strap installation, refer to AC 43.13-1B, Chapter 11.

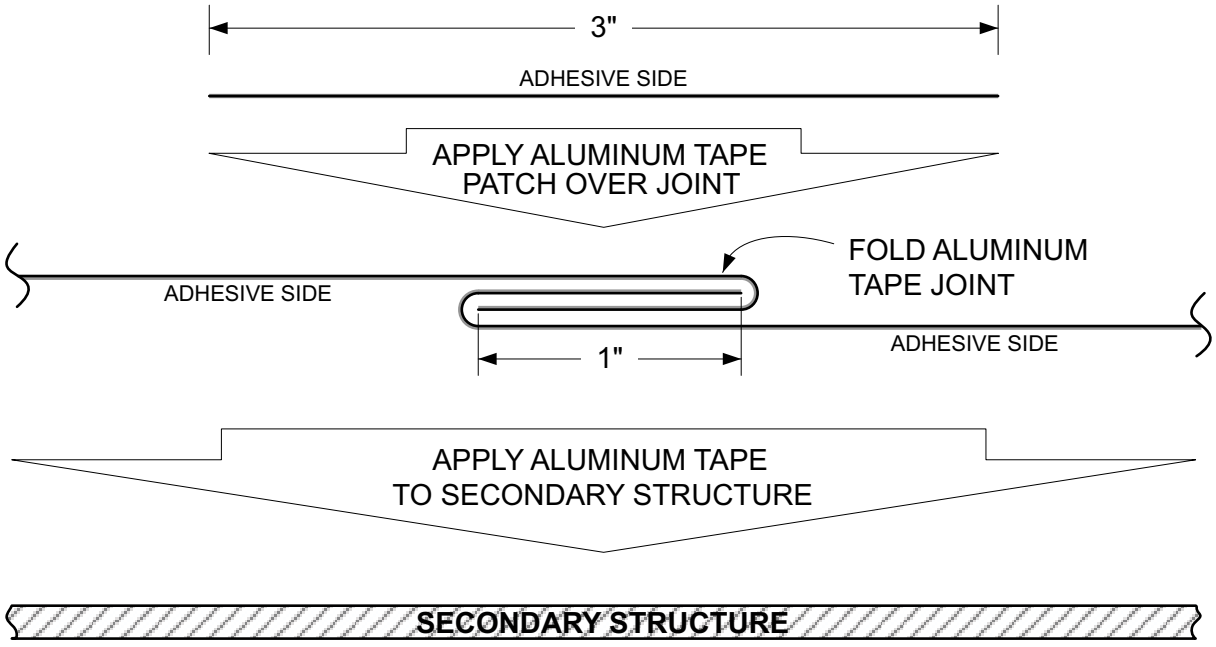

Figure B-1 Aluminum Tape Joint


GARMIN