GARMIN

System Maintenance Manual
GTN 6XX/7XX Part 23 AML STC

Contains Instructions for Continued Airworthiness
for STC SA02019SE-D

Aircraft make, model, registration number, and serial number, along with the applicable STC configuration information, must be completed in Appendix A and saved with aircraft permanent records.

© 2011-2020
Garmin International, Inc., or its subsidiaries
All Rights Reserved

Except as expressly provided herein, no part of this manual may be reproduced, copied, transmitted, disseminated, downloaded or stored in any storage medium, for any purpose without the express prior written consent of Garmin. Garmin hereby grants permission to download a single copy of this manual and of any revision to this manual onto a hard drive or other electronic storage medium to be viewed and to print one copy of this manual or of any revision hereto, provided that such electronic or printed copy of this manual or revision must contain the complete text of this copyright notice and provided further that any unauthorized commercial distribution of this manual or any revision hereto is strictly prohibited.

Adobe® is a registered trademark of Adobe Systems Incorporated. All rights reserved.

© 2020 The Bluetooth® word mark and logos are registered trademarks owned by Bluetooth SIG, Inc. and any use of such marks by Garmin is under license. Other trademarks and trade names are those of their respective owners.

© 2020 Sirius XM Radio Inc. Sirius, XM and all related marks and logos are trademarks of Sirius XM Radio Inc. All other marks and logos are property of their respective owners. All rights reserved.

Garmin®, FliteCharts®, and SafeTaxi® are registered trademarks of Garmin International or its subsidiaries. Connext™, Garmin Pilot™, GDU™, GTN™, and Telligence™ are trademarks of Garmin International or its subsidiaries. These trademarks may not be used without the express permission of Garmin.

Skywatch® and Stormscope® are registered trademarks of L-3 Communications.

Visit flyGarmin.com for aviation product support.

RECORD OF REVISIONS

Revision	Revision Date	Description
7	11/25/14	Revised to incorporate changes associated with GTN main software version 5.13.
8	2/25/16	Revised to incorporate changes associated with GTN main software version 6.00.
9	9/16/16	Revised to incorporate changes associated with GTN main software version 6.21.
10	11/02/17	Revised to incorporate changes associated with GTN main software version 6.41
11	8/21/18	Revised to incorporate changes associated with GTN main software version 6.50.
12	1/02/20	Revised to incorporate changes associated with GTN main software version 6.70.

CURRENT REVISION DESCRIPTION

Section	Description of Change
4.1	Updated wording for Airworthiness Limitations to comply with FAA regulations.
4.5.1	Changed the GTN resistance requirement to 5 mΩ for metallic and tube-and-fabric aircraft.
4.5.3	Changed the GMA 35 resistance requirement to 5 mΩ for metallic and tube-and-fabric aircraft.
4.6.1	Added voltage drop ranges for different diodes.
5.3.1.1	Corrected connector number for COM Power pin.
	Corrected “COM remote frequency increment switch” to “COM remote transfer switch”.
6.13	Corrected bonding requirement for Flight Stream 210 bonding strap replacement.
Appendix A	Updated Configuration Log to include all configuration settings in software v6.70.

INFORMATION SUBJECT TO EXPORT CONTROL LAWS

This document may contain information that is subject to the Export Administration Regulations (EAR) issued by the United States Department of Commerce (15 Code of Federal Regulations (CFR), Chapter VII, Subchapter C) and may not be exported, released, or disclosed to foreign nationals inside or outside of the United States without first obtaining an export license. Include this notice with any reproduced portion of this document.

The information in this document is subject to change without notice. Visit Garmin's Dealer Resource Center for current updates and supplemental information concerning the operation of Garmin products.

DEFINITIONS OF WARNINGS, CAUTIONS, AND NOTES

WARNING

Warnings *indicate that injury or death is possible if the instructions are disregarded.*

CAUTION

Cautions *indicate that damage to the equipment is possible.*

NOTE

Notes *provide additional information.*

WARNING

This product, its packaging, and its components contain chemicals known to the State of California to cause cancer, birth defects, or reproductive harm. This notice is being provided in accordance with California's Proposition 65. If you have any questions, or would like additional information, please refer to our website at www.garmin.com/prop65.

CAUTION

GTN 6XX/7XX units have a special anti-reflective coated display that is sensitive to waxes and abrasive cleaners. CLEANERS CONTAINING AMMONIA WILL HARM THE ANTI-REFLECTIVE COATING. It is important to clean the display using a clean, lint-free cloth with a cleaner that is safe for anti-reflective coatings.

NOTE

All screen shots used in this document are current at the time of publication. Screen shots are intended to provide visual reference only. All information depicted in screen shots, including software file names, versions, and part numbers, is subject to change and may not be up-to-date.

TABLE OF CONTENTS

1 INTRODUCTION 1-1
1.1 Content, Scope, and Purpose 1-2
1.2 Organization 1-2
1.3 Definitions and Abbreviations 1-3
1.4 Publications 1-4
1.5 Distribution 1-4

2 SYSTEM DESCRIPTION 2-1
2.1 Equipment Descriptions 2-2
2.2 Backplate Connectors 2-4
2.3 GTN Optional Interfaces 2-6
2.4 GTN Block Diagram 2-7

3 CONTROL AND OPERATION 3-1
3.1 GTN Normal Mode Overview 3-2
3.2 Software Loading 3-3
3.3 GTN Configuration Mode Overview 3-8
3.4 Database Updates 3-20

4 INSTRUCTIONS FOR CONTINUED AIRWORTHINESS 4-1
4.1 Airworthiness Limitations 4-2
4.2 Servicing Information 4-2
4.3 Maintenance Intervals 4-3
4.4 Visual Inspection 4-5
4.5 Electrical Bonding Test 4-6
4.6 Transient Voltage Suppressor (TVS) (If Installed) 4-9
4.7 GPS/SBAS Antenna Cable Overbraid Inspection (If Installed) 4-11
4.8 WXR HSDB Cable Overbraid Inspection (If Installed) 4-11

5 TROUBLESHOOTING 5-1
5.1 GTN General Troubleshooting 5-2
5.2 GTN Failure Annunciations 5-6
5.3 GTN System Messages 5-7
5.4 Flight Stream Troubleshooting 5-23
5.5 GMA 35 Troubleshooting 5-25
5.6 GMA 35 Failure Annunciations 5-26
5.7 GMA 35 System Messages 5-26

6 EQUIPMENT REMOVAL AND RE-INSTALLATION 6-1
6.1 GTN 6-2
6.2 GMA 35 6-6
6.3 Data Card/Flight Stream 510 6-9
6.4 Flight Stream 210 6-10
6.5 NAV Antenna Cable Diplexer 6-11
6.6 NAV Antenna Cable Splitter 6-11
6.7 Configuration Module (P1001 Only) 6-12
6.8 GTN Fan 6-15
6.9 TVS and Fuse (Nonmetallic Aircraft Only) 6-18
6.10 GPS/SBAS Antenna Cable Overbraid 6-22
6.11 WXR HSDB Cable Overbraid 6-24
6.12 Instrument Panel Bonding Strap 6-26

6.13 Flight Stream 210 Bonding Strap 6-27

7 EQUIPMENT CONFIGURATION AND TESTING 7-1
7.1 GTN 6XX/7XX 7-2
7.2 GMA 35 7-8
7.3 Configuration Module 7-13
7.4 Interfaced Equipment 7-13
7.5 Enabled Features 7-26

8 RETURN TO SERVICE PROCEDURE 8-1
8.1 Maintenance Records 8-1

APPENDIX A AIRCRAFT-SPECIFIC INFORMATION A-1

LIST OF FIGURES

Figure 2-1 GMA 35 Connector Layout Detail - Rear View 2-4
Figure 2-2 GMA 35c Bluetooth Connector Layout Detail - Front View 2-4
Figure 2-3 GTN 650 Connector Layout Detail - Rear View 2-5
Figure 2-4 GTN 750 Connector Layout Detail - Rear View 2-5
Figure 2-5 GTN System Interface Diagram 2-7
Figure 3-1 GTN 6XX Normal Mode Screen 3-2
Figure 3-2 GTN 7XX Normal Mode Screen 3-2
Figure 3-3 GTN Software Updater 3-3
Figure 3-4 System and Software Version 3-4
Figure 3-5 GTN Software Loader Card Formatting 3-4
Figure 3-6 Update Progress Window 3-5
Figure 3-7 Update Completion 3-5
Figure 3-8 GTN 6XX and GTN 7XX Configuration Mode Pages 3-8
Figure 3-9 GTN 7XX Updates Page 3-9
Figure 3-10 System Information Page 3-10
Figure 3-11 GTN 7XX Setup Pages 3-11
Figure 3-12 GTN 7XX Options Pages 3-13
Figure 3-13 GTN 7XX TAWS Configuration Page 3-14
Figure 3-14 Chart Configuration Page 3-15
Figure 3-15 COM Transmit Power Configuration Page 3-15
Figure 3-16 Weather Radar Page 3-16
Figure 3-17 Search and Rescue Configuration Page 3-17
Figure 3-18 GTN 6XX and 7XX Diagnostics Pages 3-18
Figure 4-1 TVS Assembly Check 4-10
Figure 5-1 Failure Screen 5-6
Figure 5-2 GMA 35 Failure Annunciation 5-26
Figure 6-1 GTN 7XX Mounting Rack Assembly 6-3
Figure 6-2 GTN 6XX Mounting Rack Assembly 6-4
Figure 6-3 GMA 35 Mounting Rack Assembly Overview 6-7
Figure 6-4 GMA 35c Mounting Rack Assembly Overview 6-8
Figure 6-5 Flight Stream Assembly Overview 6-10
Figure 6-6 Backshell Assembly (Potted Configuration Module) 6-13
Figure 6-7 Backshell Assembly (Configuration Module with Spacer) 6-14
Figure 6-8 Fan/Backplate Orientation (GTN 7XX) 6-15
Figure 6-9 Fan Wiring Replacement 6-17
Figure 6-10 TVS/Fuse Replacement (TVS1/F1) 6-19
Figure 6-11 Detail of TVS Pin Assembly 6-20
Figure 6-12 TVS2 Assembly 6-21
Figure 6-13 GPS/SBAS Antenna Cable Overbraid 6-23
Figure 6-14 WXR HSDB Cable Overbraid Details 6-25
Figure 6-15 Instrument Panel Bonding 6-26
Figure 6-16 Flight Stream Bonding 6-28
Figure 7-1 Audio Panel Page 7-8
Figure 7-2 Main Indicator (Analog) Configuration Page 7-13
Figure 7-3 VOR/LOC/GS Configuration Page 7-14
Figure 7-4 XPDR1 Configuration Page 7-20
Figure 7-5 Audio Configuration Page 7-26
Figure 7-6 Terrain Configuration Page 7-26

LIST OF TABLES

Table 1-1 Recommended Documents 1-4
Table 3-1 GTN Database Summary 3-20
Table 4-1 Periodic Maintenance 4-3
Table 5-1 GTN Troubleshooting Guide 5-2
Table 5-2 Alert Text Troubleshooting Guide 5-7
Table 5-3 COM Alert Troubleshooting Guide 5-11
Table 5-4 GPS/SBAS Alert Troubleshooting Guide 5-13
Table 5-5 VLOC/GS Alert Troubleshooting Guide 5-14
Table 5-6 Remote Transponder Alert Troubleshooting Guide 5-15
Table 5-7 GAD 42 Alert Troubleshooting Guide 5-16
Table 5-8 Traffic Alert Troubleshooting Guide 5-16
Table 5-9 Datalink Alert Troubleshooting Guide 5-17
Table 5-10 Weather Radar Alert Troubleshooting Guide 5-19
Table 5-11 TAWS Alert Troubleshooting Guide 5-20
Table 5-12 Third-Party Sensor Alert Troubleshooting Guide 5-21
Table 5-13 Flight Stream Troubleshooting 5-23
Table 5-14 GMA 35 Troubleshooting 5-25
Table 5-15 Remote Audio Panel Alert Troubleshooting Guide 5-26
Table 6-1 Self-Test Values 6-5
Table 6-2 Configuration Module Wire Color Reference Chart 6-12
Table 6-3 Configuration Module Kit P/N 011-00979-03 (P1001) 6-13
Table 6-4 Configuration Module Kit P/N 011-00979-00 (P1001) 6-14
Table 6-5 Fan Kit 6-16
Table 6-6 Fan Cable Wire Color Reference Chart 6-16
Table 6-7 Instrument Panel Bonding Hardware 6-26
Table 6-8 Flight Stream Bonding Hardware 6-28
Table 7-1 Configuration and Checkout Procedures 7-2
Table 7-2 Summary of COM RX Squelch Settings and Auto Squelch Levels 7-6
Table 7-3 COM Carrier Squelch Selections 7-6
Table 7-4 COM Carrier Squelch Selections 7-7

1 INTRODUCTION

1.1 Content, Scope, and Purpose 1-2
1.2 Organization 1-2
1.3 Definitions and Abbreviations 1-3
1.4 Publications 1-4
1.5 Distribution 1-4

1.1 Content, Scope, and Purpose

This document provides Instructions for Continued Airworthiness (ICA) and Maintenance Manual (MM) for the GTN 6XX/7XX and GMA 35 as installed under STC SA02019SE-D. This document satisfies the requirements for continued airworthiness, as defined by 14 CFR Part 23.1529 and 14 CFR Part 23 Appendix G. Information in this document is required to maintain the continued airworthiness of the GTN 6XX/7XX, GMA 35/35c, Flight Stream 210, and Flight Stream 510.

1.2 Organization

The following outline briefly describes the organization of this manual:

Section 2: System Description

Provides a description of the equipment installed by STC SA02019SE-D. An overview of the GTN, GMA 35, Flight Stream 210, and Flight Stream 510 system interfaces are provided.

Section 3: Control and Operation

Presents basic control and operation information related to maintenance of the GTN 6XX/7XX, GMA 35/35c, Flight Stream 210, and Flight Stream 510.

Section 4: Instructions for Continued Airworthiness

Provides Instructions for Continued Airworthiness of the GTN, GMA 35, Flight Stream 210, and Flight Stream 510 systems.

Section 5: Troubleshooting

Provides troubleshooting information to aid in diagnosing and resolving potential problems with the GTN, GMA 35, Flight Stream 210, and Flight Stream 510 equipment.

Section 6: Equipment Removal and Re-installation

Provides instructions for the removal and re-installation of the GTN, GMA 35, Flight Stream 210, and Flight Stream 510 equipment.

Section 7: Equipment Configuration and Testing

Provides instructions for configuration and testing of the GTN, GMA 35, Flight Stream 210, and Flight Stream 510 equipment.

Section 8: Return to Service Procedure

Specifies return to service procedures required after completion of maintenance of the GTN, GMA 35, Flight Stream 210, and Flight Stream 510 equipment.

Appendix A: Aircraft-Specific Information

Provides a form to record aircraft-specific installation and configuration data for the GTN, GMA 35, Flight Stream 210, and Flight Stream 510 equipment.

1.3 Definitions and Abbreviations

Except where specifically noted, references made to the GMA 35 will apply to the GMA 35c.

The following terminology is used within this document:

AC	Alternating Current
ADS-B	Automatic Dependent Surveillance Broadcast
AGC	Automatic Gain Control
AGCS	Automatic Ground Clutter Suppression
AHRS	Altitude and Heading Reference System
AML	Approved Model List
BIT	Built-In Test
CDI	Course Deviation Indicator
CFR	Code of Federal Regulations
COM	Communications
CRG	Cockpit Reference Guide
CSA	Conflict Situational Awareness
DME	Distance Measuring Equipment
EFIS	Electronic Flight Instrument System
EHSI	Electronic Horizontal Situation Indicator
FIS-B	Flight Information Services Broadcast
FPGA	Field-Programmable Gate Array
G/S	Glideslope
GAD	Garmin Interface Adapter
GDL	Garmin Datalink
GMA	Garmin Audio Panel
GNS	Garmin Navigation System
GPS	Global Position System
GSR	Garmin Services
GTN	Garmin Touch Navigator
GWX	Garmin Weather Radar
HSDB	High-Speed Data Bus
ICA	Instructions for Continued Airworthiness
ICS	Intercom System
IFR	Instrument Flight Rules
ILS	Instrument Landing System
IRU	Inertial Reference Unit
LED	Light Emitting Diode
LOC	Localizer
LOI	Loss of Integrity
LRU	Line Replaceable Unit
MHz	Mega-Hertz
NAV	Navigation
OBS	Omni Bearing Selector
PA	Passenger Address
PED	Portable Electronic Device
PTC	Push-to-Command
PTT	Push-to-Talk
PVT	Position, Velocity, Time
R/T	Radar Transceiver
RF	Radio Frequency
RMI	Radio Magnetic Indicator
RX	Receive
SAR	Search and Rescue
SBAS	Satellite Based Augmentation System
SDI	Source/Destination Identifiers
SSM	Sign/Status Matrix
STC	Supplemental Type Certificate
TAS	Traffic Advisory System
TCAS	Traffic Collision Avoidance System
TAWS	Terrain Awareness System
TCAD	Traffic Collision Avoidance Device
TIS	Traffic Information Service
TSO	Technical Standard Order
TVS	Transient Voltage Suppressor
TX	Transmit
UTC	Coordinated Universal Time
VDC	Volts Direct Current
VFR	Visual Flight Rules
VHF	Very High Frequency
VOR	VHF Omni-Directional Range
WAAS	Wide Area Augmentation System
WXR	Weather Radar
XPDR	Transponder

1.4 Publications

When performing system maintenance on the GTN, GMA, or Flight Stream, it is recommended that the following documents be made available:

Table 1-1 Recommended Documents

Garmin Document	Part Number
Master Drawing List, GTN 6XX/7XX Part 23 AML STC	005-00533-C0
Equipment List, GTN 6XX/7XX Part 23 AML STC	005-00533-C1
GTN 725/750 Pilot's Guide	190-01007-03
Supplemental Airplane Flight Manual for the Garmin GTN 6XX/7XX GPS/SBAS Navigation System	190-01007-A2
Supplemental Airplane Flight Manual for the Garmin GTN 6XX/7XX GPS/SBAS Navigation System (GPS Functions Not Approved for IFR Navigation)	190-01007-A5
GTN 6XX/7XX Part 23 AML STC Installation Manual	190-01007-A3
GTN 6XX/7XX Part 23 Installation Checklist	190-01007-E1
Guideline for GTN Flight Plan and User Waypoint Files	190-01007-F0 [1]

Notes:

[1] Contact Garmin technical support for a copy of this document.

1.5 Distribution

This document is required for maintaining the continued airworthiness of the aircraft. When this document is revised, every page will be revised to indicate current revision level. Garmin Dealers may obtain the latest revision of this document at the Garmin Dealer Resource website.

Dealers are notified of manual revision changes via a Garmin Service Bulletin.

Owner/operators may obtain the latest revision of this document at flyGarmin.com or by contacting a Garmin dealer. Garmin contact information is available at flyGarmin.com.

2 SYSTEM DESCRIPTION

2.1 Equipment Descriptions....2-2
2.1.1 GTN 6XX/7XX Navigators and GMA 35....2-2
2.1.2 NAV Antenna Cable Splitter....2-3
2.1.3 NAV Antenna Cable Diplexer....2-3
2.2 Backplate Connectors....2-4
2.3 GTN Optional Interfaces....2-6
2.4 GTN Block Diagram....2-7

2.1 Equipment Descriptions

2.1.1 GTN 6XX/7XX Navigators and GMA 35

NOTE

For pinouts and wiring diagrams, refer to GTN 6XX/7XX Part 23 AML STC Installation Manual (P/N 190-01007-A3).

The GTN SBAS navigators are a family of aviation panel-mounted retrofit products. The following sections will describe the available functions for each unit in the GTN 6XX/7XX navigators.

2.1.1.1 GTN 6XX

The GTN 6XX SBAS navigators are a family of panel-mounted GPS/NAV/COM navigators. “GTN 6XX” includes the GTN 625, GTN 635, and GTN 650. They are 6.25 inches wide and 2.65 inches tall. The GTN 6XX features a 600 by 266 pixel color LCD touchscreen. The GTN 625 is a GPS/SBAS unit that meets the requirements of TSO-C146c and may be approved for IFR en route, terminal, oceanic, non-precision, and precision approach operations when installed in accordance with the instructions in the manuals referenced in the GTN AML STC. The GTN 635 includes all of the features of the GTN 625 and an airborne VHF/COM transceiver. The GTN 650 includes all of the features of the GTN 625, an airborne VHF/COM transceiver, airborne VOR/localizer (LOC) receiver, and glideslope (G/S) receiver.

2.1.1.2 GTN 7XX

The GTN 7XX SBAS navigators are a family of GPS/NAV/COM aviation panel-mounted products. “GTN 7XX” includes the GTN 725 and GTN 750. GTN 7XX units are 6.25 inches wide and 6.00 inches tall. They feature a 600 by 708 pixel color LCD touchscreen. The GTN 725 is a GPS/SBAS unit that meets the requirements of Technical Standard Order TSO-C146c and may be approved for IFR en route, terminal, oceanic, non-precision, and precision approach operations when installed in accordance with the instructions in the manuals referenced in the GTN AML STC. The GTN 750 includes all of the features of the GTN 725, an airborne VHF communications transceiver, and airborne VOR/localizer (LOC) and glideslope (G/S) receivers. The GTN 725 and GTN 750 have the ability to remotely control GMA 35 audio panel functions.

2.1.1.3 GMA 35 Audio Panel

The GMA 35 Audio Panel is a remote-mounted marker beacon receiver and an audio panel with a six-position intercom system (ICS) that interfaces to the communications and navigation radios, headsets, microphones, and speakers. The ICS includes electronic cabin noise de-emphasis, two stereo music inputs, and independent pilot/copilot/passenger volume controls. The intercom provides three selectable isolation modes. A pilot-selectable cabin speaker output can be used to listen to the selected aircraft radios or to broadcast PA announcements.

The audio panel relies on the GTN 725 or GTN 750 to control and display the audio functions. The GMA 35 interfaces to the GTN 7XX through RS-232 for control and display of audio panel functions.

The GMA 35c provides the functionality of the GMA 35, with the capability to pair Bluetooth™ audio sources. This enables the distribution of audio to ICS positions when using a compatible iOS or Android™ device. The GMA 35c supports up to ten stored devices and one active Bluetooth device.

2.1.1.4 Flight Stream 210

The Flight Stream 210 interfaces to the GTN 6XX/7XX through RS-232 for attitude information, flight plan information, and GPS PVT. The information displays on a portable electronic device (PED). The Flight Stream interfaces to the GDL 88 through RS-422 and the GDL 69 through RS-232.

NOTE

Only one Flight Stream system should be installed per aircraft.

NOTE

Flight Stream supports connection to one navigator at a time.

2.1.1.5 Flight Stream 510

NOTE

The Flight Stream 510 is a wireless-enabled data card that is inserted into the GTN data card slot.

The Flight Stream 510 interfaces to the GTN 6XX/7XX by replacing the front-loaded data card to allow wireless database synchronization with PEDs. Synchronized information is then disseminated to various LRUs through their existing GTN interface connections.

2.1.2 NAV Antenna Cable Splitter

The navigation antenna cable splitter (Garmin P/N 013-00112-00) is used for installations involving dual VHF navigation capable GTNs or a single VHF navigation capable GTN installation with a second non-Garmin aviation unit.

2.1.3 NAV Antenna Cable Diplexer

GTN 650/750 navigation units have a single navigation antenna port and require a composite signal for installations that include separate VOR/LOC and G/S antennas. The navigation diplexer (Comant diplexer VOR/GS, Model CI-507) is used for these installations.

2.2 Backplate Connectors

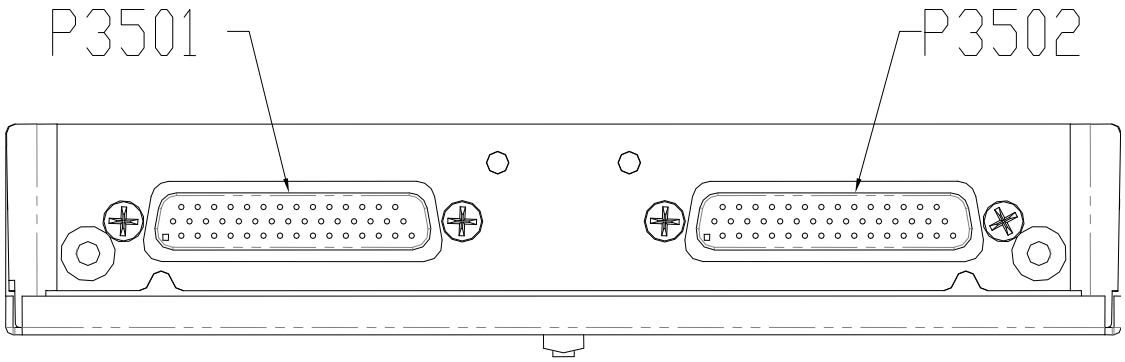

Figure 2-1 GMA 35 Connector Layout Detail - Rear View

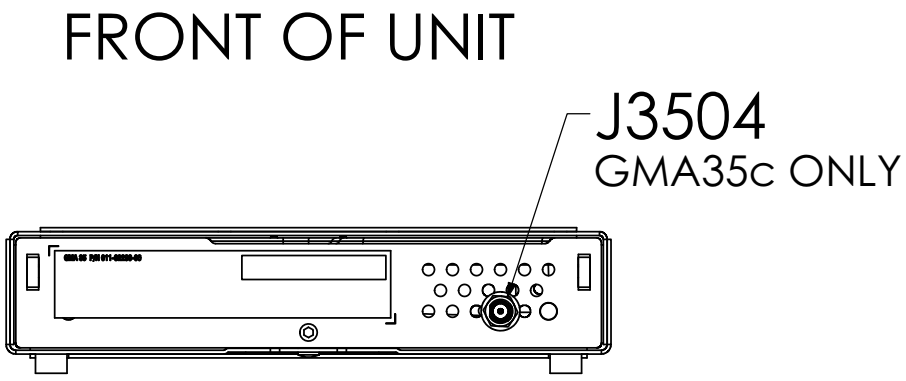

Figure 2-2 GMA 35c Bluetooth Connector Layout Detail - Front View

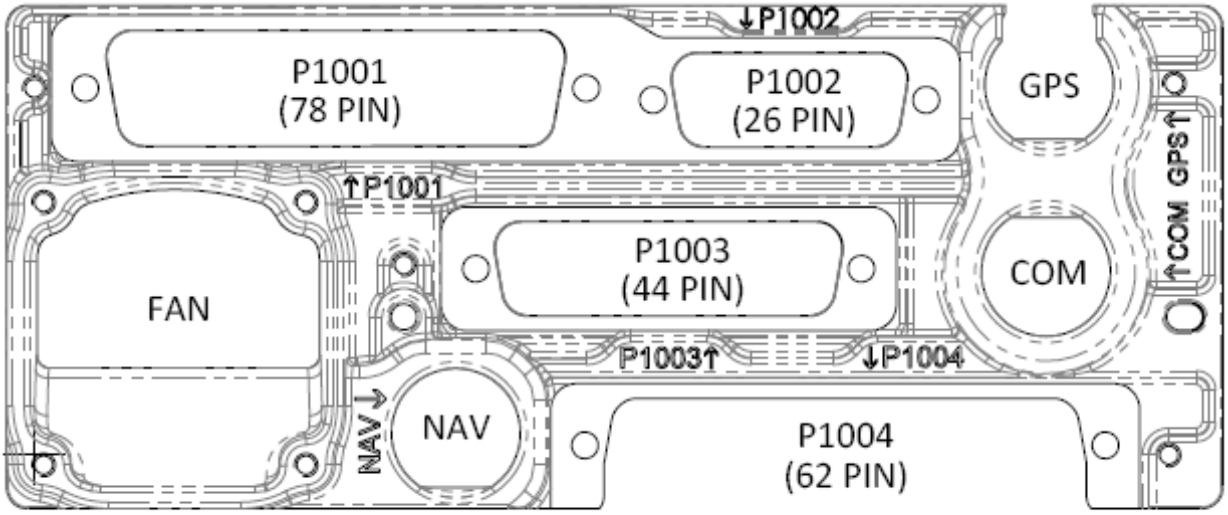

Figure 2-3 GTN 650 Connector Layout Detail - Rear View

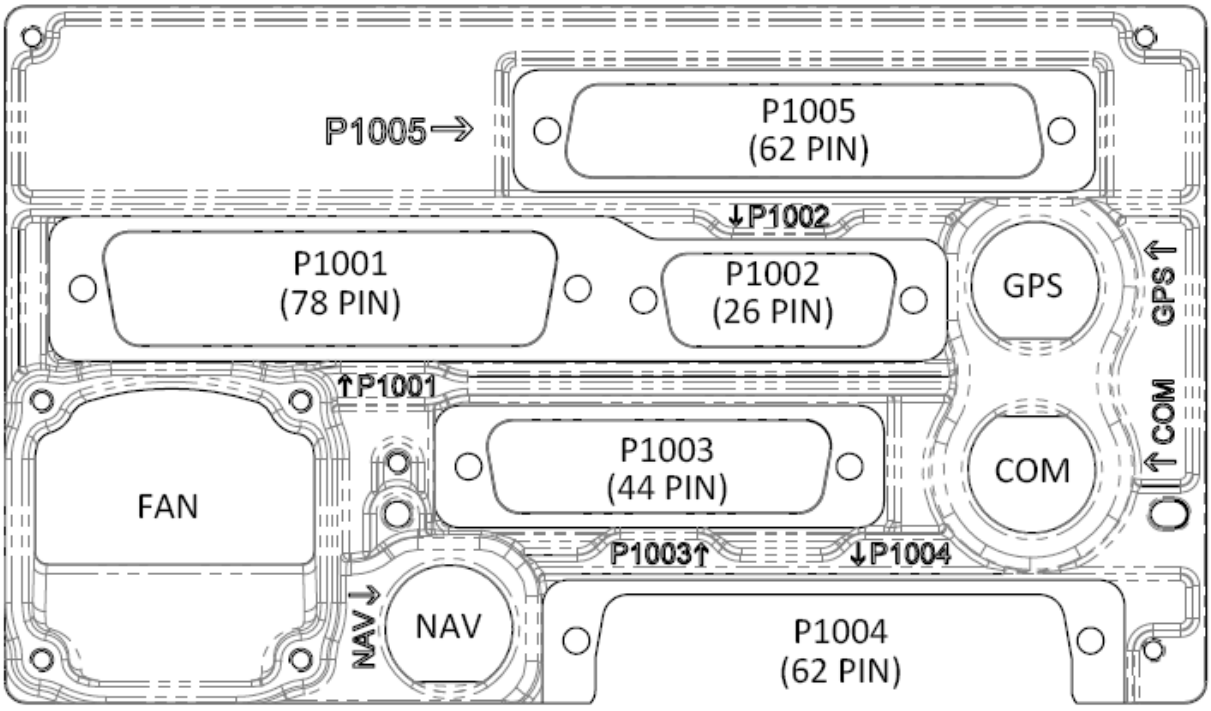

Figure 2-4 GTN 750 Connector Layout Detail - Rear View

2.3 GTN Optional Interfaces

Optional equipment interfaces include:

- Audio panel
- Air data computer
- Altitude serializer or fuel/air data computers
- Autopilot
- EFIS displays
- EHSI displays
- IRU/AHRS
- Navigation indicators
- Weather, traffic, terrain systems
- DME
- CDI/HSI source selection annunciators
- TAWS annunciator panels
- Multifunction displays
- Interface adapters
- Synchro heading sources
- Weather radar
- Garmin Iridium transceiver
- Garmin ADS-B traffic and FIS-B weather sources
- Garmin Flight Stream

2.4 GTN Block Diagram

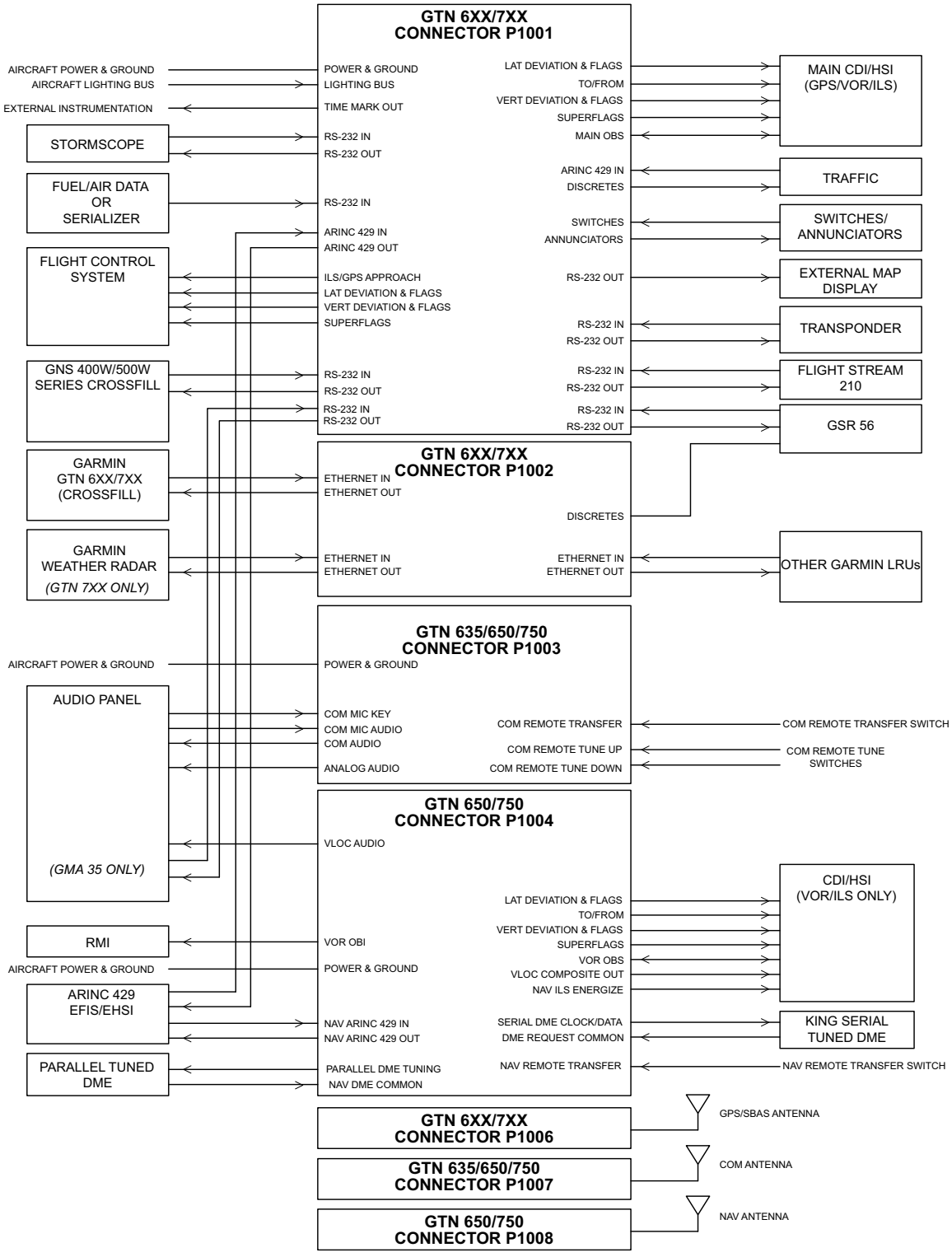

Figure 2-5 GTN System Interface Diagram

3 CONTROL AND OPERATION

3.1 GTN Normal Mode Overview 3-2
3.2 Software Loading 3-3
3.2.1 GTN Software Loader Card Creation 3-3
3.2.2 GMA 35 Boot Block Loading 3-6
3.2.3 GMA 35 Software Loading 3-7
3.3 GTN Configuration Mode Overview 3-8
3.3.1 GTN Software Updates 3-9
3.3.2 System Information 3-10
3.3.3 GTN Setup Page 3-11
3.3.4 GTN Options Page 3-13
3.3.5 GTN Diagnostics Page 3-18
3.4 Database Updates 3-20

3.1 GTN Normal Mode Overview

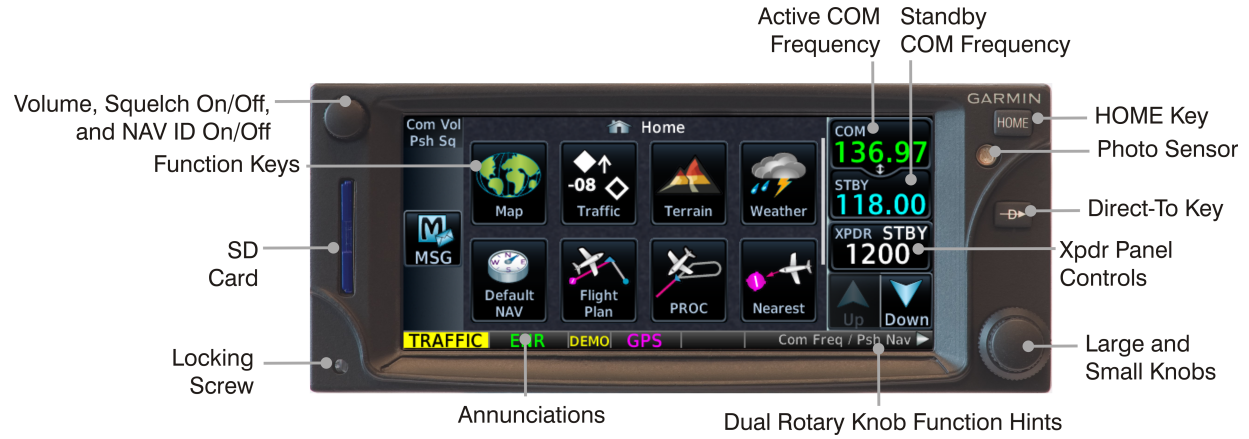

Figure 3-1 GTN 6XX Normal Mode Screen

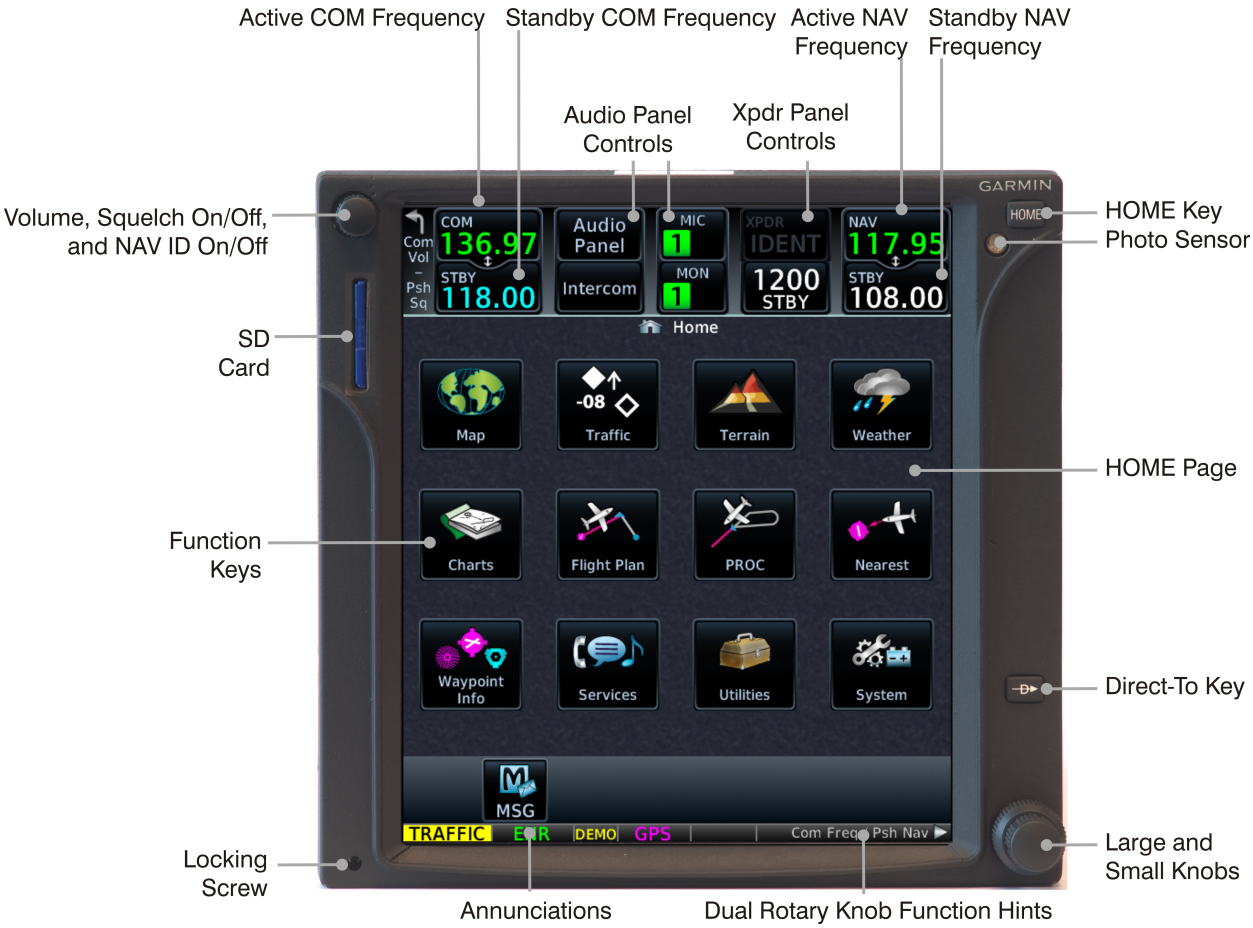

Figure 3-2 GTN 7XX Normal Mode Screen

3.2 Software Loading

3.2.1 GTN Software Loader Card Creation

CAUTION

In order to create a GTN Software Loader Card, the drive that you select will be completely erased.

NOTE

The application to create the GTN Software Loader Card performs on PCs with Windows 2000, XP, Vista, Windows 7, and Windows 10. There is no Macintosh support at this time.

NOTE

An SD card reader is needed to create the GTN Software Loader Card using the application that is downloaded from Garmin. The approved readers are SanDisk® SDDR-999 and SDDR-93, although other SD card readers may work.

A GTN Software Loader Card is created using GTN downloadable software and an SD card with a GTN software application downloaded from the Dealer Resource Center on Garmin's website. The Dealer Resource Center will allow the technician to choose which software package(s) to load onto the card.

Create a GTN Software Loader Card as follows:

1. Go to the Dealer Resource Center on Garmin's website.
2. Download the GTN Software Loader Image. Refer to *Equipment List, GTN 6XX/7XX Part 23 AML STC* for the correct Software Loader Image part number.
3. Ensure that you have an SD card reader connected to the PC. Insert the GTN Downloadable Software SD Card into the card reader.
4. Run the executable file.

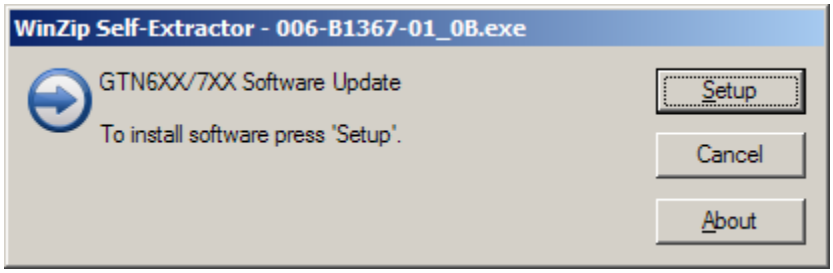

Figure 3-3 GTN Software Updater

5. Click **Setup**.

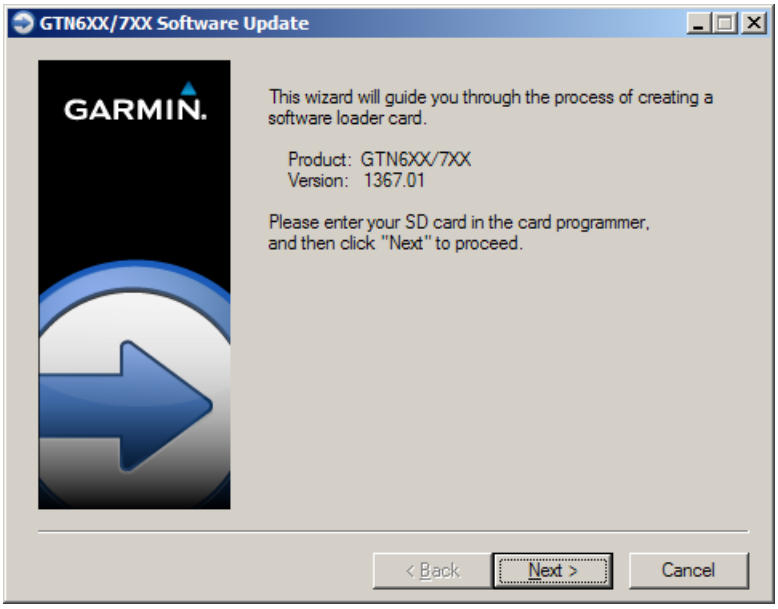

Figure 3-4 System and Software Version

6. Click **Next**.



Figure 3-5 GTN Software Loader Card Formatting

7. Ensure that the correct drive is selected.
8. Click **Next** to create the card.
9. Click **Next** to acknowledge any warnings that may appear.



Figure 3-6 Update Progress Window

10. Click **Finish** to complete the update process.

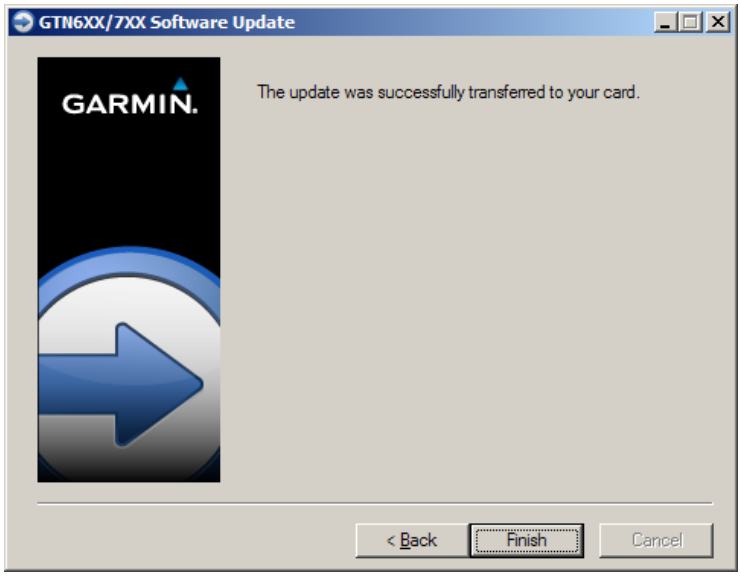

Figure 3-7 Update Completion

11. Eject the card from the card reader (or stop the card reader in Windows). The GTN Software Loader Card is now ready to use.

3.2.2 GMA 35 Boot Block Loading

NOTE

The GMA 35 Boot Block Loader Card is separate from the GMA 35 Software Loader Card and is required to update Boot Block software to v4.10. For instructions on creating the GMA 35 Software Loader Card, refer to Section 3.2.3. GTN main software v6.11 (or later) is required for GMA 35 Boot Block v4.10 (or later).

1. Remove power from the GTN 7XX.
2. Insert the GTN Boot Block Loader Card into the GTN 7XX data card slot. For instructions on how to create a GTN Boot Block Loader Card, refer to Section 3.2.1.
3. Apply power to the GTN 7XX.
4. Ensure the GMA 35 circuit breaker is closed.
5. Select all GMA 35 Boot Block updates.
6. To begin the software update, touch the **Update** key on the bottom of the display.
7. The GTN will display the prompt, “Start GMA 35 Software Updates?”
8. To allow the GTN to update the GMA 35, touch **OK**.
9. When updates complete, the GTN will display, “Update Complete!”
10. Turn the GTN and GMA 35 off by opening the circuit breaker.
11. Remove the Boot Block Loader Card.
12. Re-insert the database card in the data card slot.
13. Restore power on the GTN and GMA 35 by closing the circuit breakers.
14. To ensure the software correctly updated, go to the ***System Information*** page and select the **GMA 35**. Refer to Section 3.3.2 for more information on the ***System Information*** page.

3.2.3 GMA 35 Software Loading

NOTE

The GMA 35 software will be present on the SD card when creating a GTN Software Loader Card. A separate card is not required to perform GMA 35 software updates.

1. Remove power from the GTN 7XX by opening the circuit breaker.
2. Insert the GTN Software Loader Card into the GTN 7XX data card slot. For instructions on how to create a GTN Software Loader Card, refer to Section 3.2.1.
3. Hold down the **HOME** key until "Garmin" is fully lit on the display after power is applied by closing the circuit breaker for the GTN 7XX.
4. Ensure the GMA 35 circuit breaker is closed.
5. The ***Configuration Mode*** page should now be displayed. Touch the **Updates** key to display available software.
6. To select GMA 35 software updates, touch the **GTN Software Updates** key and select **GMA 35 Software Updates**.
7. To update the GMA 35 with all available software, touch **Select All**.
8. Touch the **Update** key.
9. The GTN will display the prompt, "Start GMA 35 Software Updates?"
10. Touch **OK** to allow the GTN to update the GMA 35.
11. When the updates are complete, the GTN will display, "Update Complete!"
12. Turn the GTN and GMA 35 off (i.e., open the circuit breaker) and remove the Software Loader Card.
13. Re-insert the database card in the data card slot.
14. Restore power on the GTN and GMA 35 by closing the circuit breakers and ensure the software was updated correctly by going to the ***System Information*** page and selecting the **GMA 35**. Refer to Section 3.3.2 for more information on the ***System Information*** page.

3.3 GTN Configuration Mode Overview

NOTE

When configuring the GTN, ensure that configuration module service messages are not displayed in the message queue. This indicates an improperly wired or damaged configuration module.

Configuration mode is used to configure the GTN settings for each specific installation. To access Configuration mode, perform the following steps:

1. Remove power from the GTN by opening the circuit breaker.
2. Press and hold the **HOME** key and reapply power to the GTN.
3. Release the **HOME** key when the display activates and "Garmin" appears fully lit on the screen.

The ***Configuration Mode*** page is the first page displayed. For detailed information regarding how to configure the GTN, refer to *GTN 6XX/7XX Part 23 AML STC Installation Manual*. While in Configuration mode, select pages by touching the desired key on the display. Some pages may require page scrolling to view all of the information and keys. Scrolling is done by touching the screen and dragging the page in the desired direction or by touching the **Up** or **Down** keys.

NOTE

The configuration pages shown reflect main software version 3.00. Some differences in operation may be observed when comparing information in this manual to later software versions.

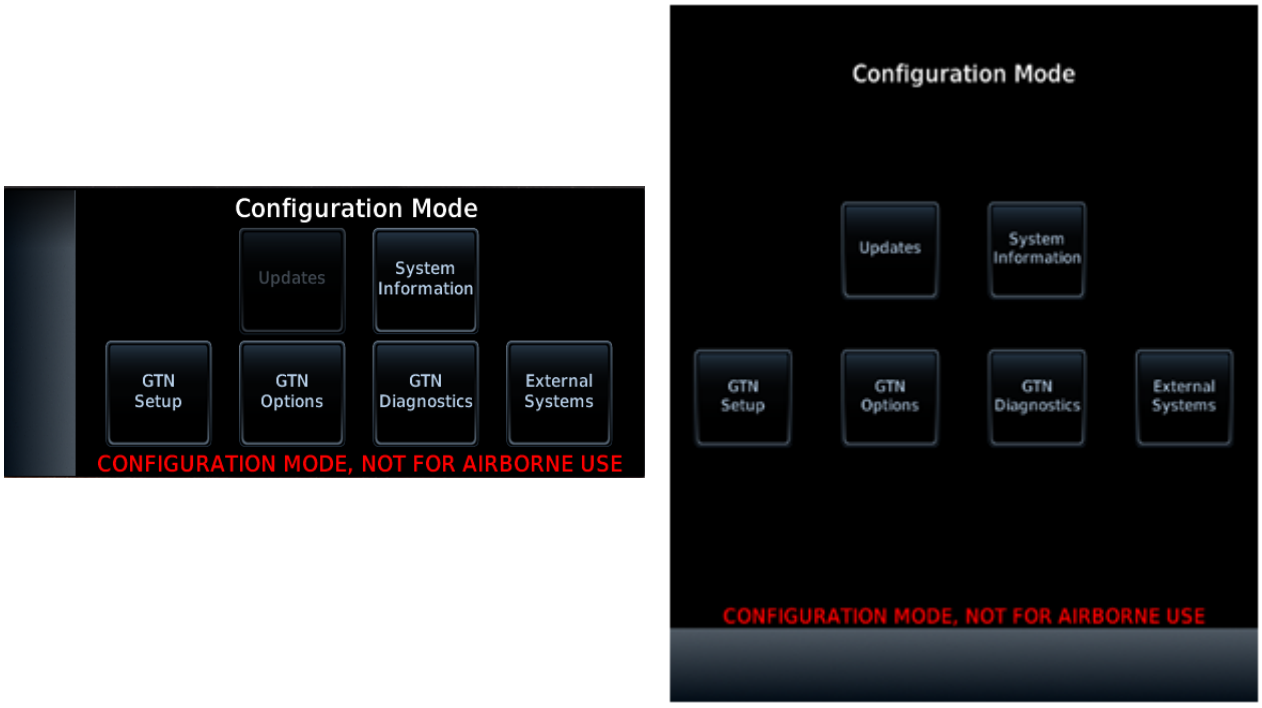

Figure 3-8 GTN 6XX and GTN 7XX Configuration Mode Pages

3.3.1 GTN Software Updates

NOTE

The following steps will need to be repeated for each replacement GTN unit that requires a software update.

To update the GTN software, perform the following steps:

1. Remove power from the GTN by opening the circuit breaker.
2. Remove the database card and insert the correct GTN Software Loader Card into the data card slot. Refer to Section 3.2.1 for creating a GTN Software Loader Card.
3. Restore power to the GTN by closing the circuit breaker.
4. The GTN is now in Configuration mode, as shown in Figure 3-8. Touch **Updates** to display the available software updates.
5. Check that the software version being loaded to the GTN matches the software version listed in *Equipment List, GTN 6XX/7XX Part 23 AML STC*. The ***Updates*** page displays the version that is installed on the unit and the version installed on the loader card.
6. Check that the available GTN software updates are displaying by ensuring that **GTN Software Updates** key is highlighted in the upper-left corner (upper-right for GTN 6XX) of the display.
7. To update the GTN with all available software, touch **Select All**.
8. To begin the software update, touch **Updates** on the bottom of the display.
9. The GTN will display the prompt, "Start GTN Software Updates?"
10. Touch **OK** to allow the GTN to go through the update process.
11. When the updates are complete, the GTN will display, "Update Complete!"
12. Remove power from the GTN and remove the Software Loader Card. Re-insert the database card into the data card slot.



Figure 3-9 GTN 7XX Updates Page

3.3.2 System Information

View the ***System Information*** page by touching the **System Information** key on the ***Configuration Mode*** page. The ***System Information*** page displays the unit type, serial number, and system ID for the GTN. It contains the software and hardware versions of the Main, I/O, Display, Keypad, LED, GPS/WAAS, COM, and NAV boards. System information is available for certain other LRUs connected to the GTN. Touch the **GTN** key and choose which LRU to display. Touch **UP** or **DOWN** to view all the information.

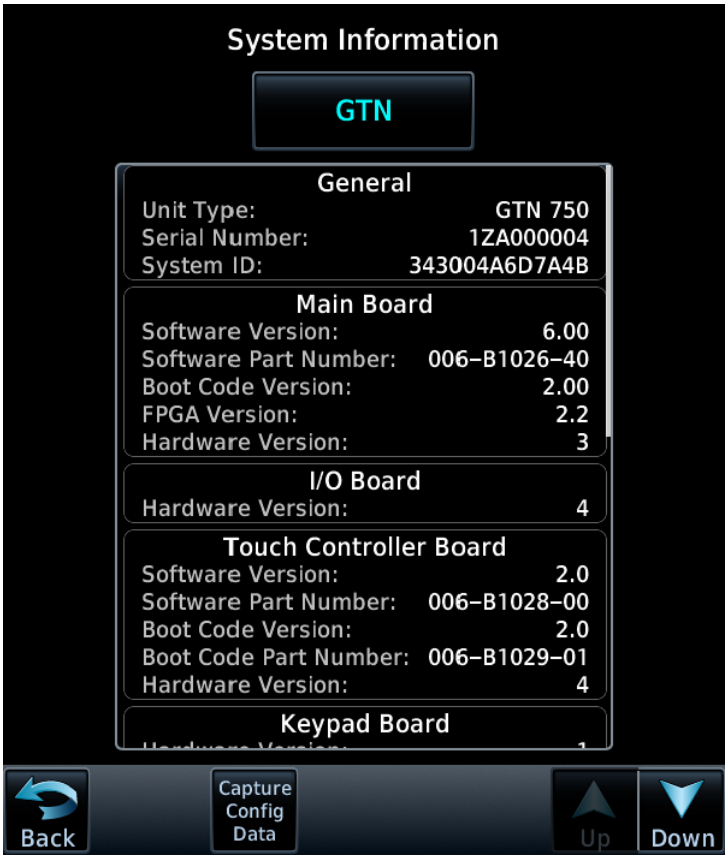

Figure 3-10 System Information Page

3.3.3 GTN Setup Page

This section provides a brief overview of the pages that are accessed from the ***GTN Setup*** page. To access the ***GTN Setup*** page, touch the **GTN Setup** key from the ***Configuration Mode*** page, as shown in Figure 3-8.



Figure 3-11 GTN 7XX Setup Pages

ARINC 429

This allows the user to configure the ARINC 429 input and output ports on the GTN. Both ARINC 429 formats and bus speeds are set from this configuration page.

RS-232

This allows the user to configure the RS-232 input and output ports on the GTN.

HSDB (Ethernet)

This allows the user to set which Ethernet ports are connected.

Interfaced Equipment

This allows the user to configure which LRUs are installed and interfaced to the GTN. The transponder selection is automatically configured when a valid transponder configuration is selected on the ***RS-232*** page.

Main Indicator (Analog)

This allows the user to calibrate the OBS resolver and configure the CDI key, selected course for GPS, VLOC, and the V-Flag state.

Lighting

This allows the user to set the backlight and key lighting brightness display parameters.

Enhanced Lighting

This replaces the ***Lighting*** page when enabled under the ***Main System Configuration*** page. Enhanced lighting allows the user to set the backlight and key lighting brightness display parameters. Enhanced lighting is used to configure separate Day/Night lighting curves.

Audio

This allows the user to configure the aural alert volume.

Traffic

This allows the user to configure the traffic intruder symbol color and configure whether or not the GTN controls the traffic system.

Main System

This page allows the user to display miscellaneous configuration options for the GTN. Page settings include the following:

- Air/Ground Threshold
- Air/Ground Discrete
- Fuel Type
- Heading Source Input
- Altitude Source Input

COM

This allows the user to configure the RF squelch volume, Mic 1 Gain, and sidetone volume. These selections are only available for the GTN 635, 650, and 750 units.

VOR/LOC/GS

This allows the user to check the CDI outputs from the VOR/LOC/GS receiver and the OBS resolver input to the VOR receiver. It is used to format the DME tuning data. The ***VOR/LOC/GS*** page is only available for the GTN 650 and 750 navigation units.

ARINC 708

This allows the user to configure the GTN ARINC 708 input port. Selection of one of the approved ARINC 708 weather radars is only possible if the digital radar enablement is active. This setting is only available for the GTN 725 and 750 navigation units.

Discretes

This allows the user to customize the configuration of discrete inputs/outputs on the J1001 and J1002 connectors.

Waypoints

These settings are not used in this STC.

Ownship

This allows the user to select the displayed ownship icon from a list.

3.3.4 GTN Options Page

NOTE

For first time feature enablement, refer to GTN 6XX/7XX Part 23 AML STC Installation Manual for additional requirements and checkout procedures. This manual only describes the necessary steps to re-enable the feature for existing installations. All re-enablements use the feature enablement card from initial installation.

NOTE

Feature enablement cards should be provided to the customer after service has been completed.

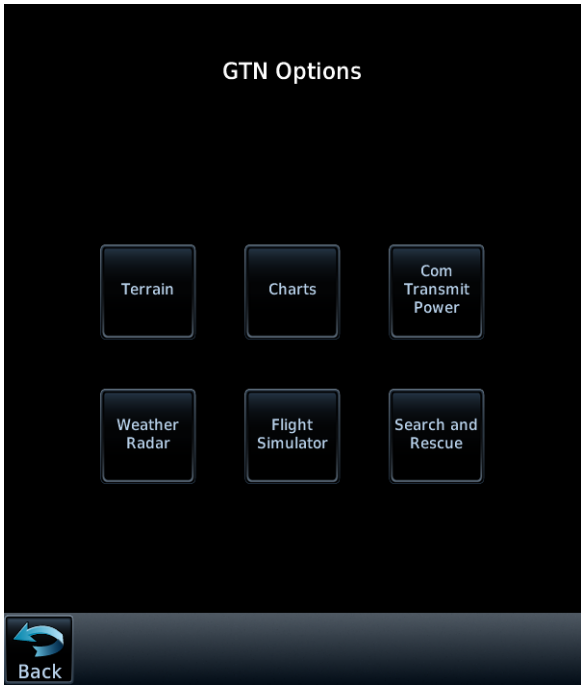

Figure 3-12 GTN 7XX Options Pages

3.3.4.1 TAWS B Enablement

NOTE

When the Terrain Alerting feature is enabled, the GTN will provide a subset of the TAWS B functionality, but does not meet the requirements of TSO-C151c.

When the optional TAWS feature is enabled, the GTN will provide Class B TAWS functionality. This section describes how to reactivate the TAWS feature in the GTN.

1. Turn the GTN off by opening the NAV/GPS circuit breaker.
2. Remove the database SD card from the data card slot and insert the TAWS Enablement Card (P/N 010-00878-01).
3. Enter Configuration mode by applying power (i.e., closing the circuit breaker) to the GTN while holding the **HOME** key.
4. Navigate to the ***Terrain Configuration*** page from the ***GTN Options*** page. Touch the **TAWS B** key.

When the TAWS feature is activated, the **TAWS B** key will be lit green, as shown in Figure 3-13.

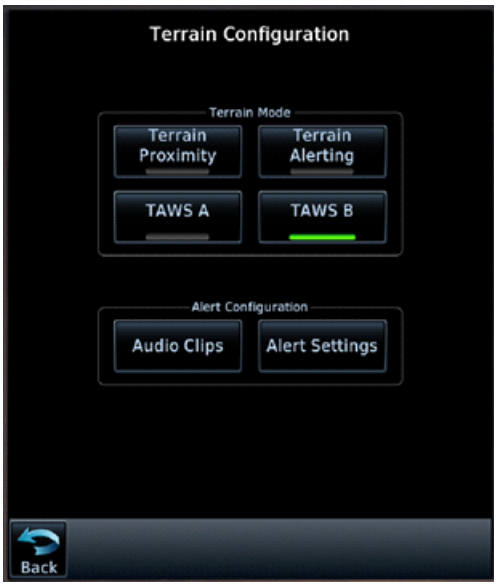

Figure 3-13 GTN 7XX TAWS Configuration Page

3.3.4.1.1 TAWS-B Configuration Options

When TAWS B is enabled, as shown in Figure 3-13, the following configuration settings may be accessed.

Audio Clips

This allows the user to select aural alert messages for various caution and warning types.

Alert Settings

The GTN TAWS alerting algorithm adapts the terrain alerting criteria based on nearby airports. The Alert Settings configuration options allow the user to select the minimum criteria that the airport must meet to be considered as a nearby airport for the purpose of TAWS alerting. Refer to Section 7.5.1 for additional details.

3.3.4.2 ChartView™ Enablement (GTN 7XX Only)

The GTN 7XX displays Jeppesen charts using the optional ChartView feature, when activated. To configure which Charts to display, touch either **None**, **FliteCharts**, or **ChartView**. If **ChartView** is selected, it must be enabled as described below:

1. Turn the GTN off by opening the NAV/GPS circuit breaker.
2. Remove the database SD card from the data card slot and insert the ChartView Enablement Card (P/N 010-00878-40).
3. Enter Configuration mode on the GTN by applying power to the GTN (i.e., closing the circuit breaker) while holding the **HOME** key.
4. Navigate to the ***Charts*** page from the ***GTN Options*** page. Touch the **ChartView** key.
5. When the ChartView feature is activated, the **ChartView** key will be lit green, as shown in Figure 3-14.

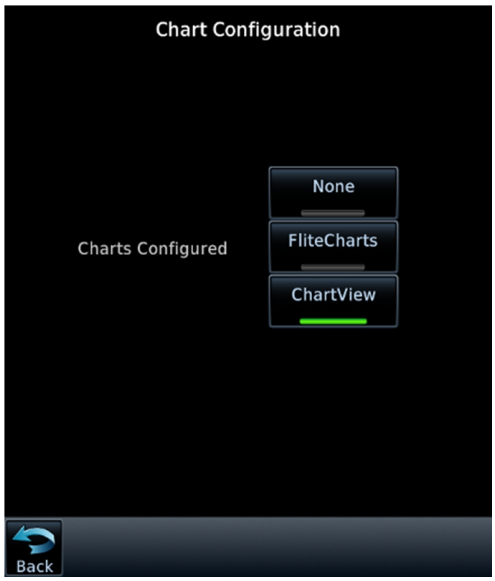

Figure 3-14 Chart Configuration Page

3.3.4.3 COM Transmit Power Enablement

When the optional 16W COM power is configured, the GTN COM will transmit with 16 watts rather than the standard 10 watts. This section describes how to re-enable the 16W COM transmit power.

1. Turn the GTN off by opening the NAV/GPS circuit breaker.
2. Remove the database SD card from the data card slot and insert the 16W Enablement Card (P/N 010-00878-40).
3. Enter Configuration mode by applying power to the GTN (i.e., closing the circuit breaker) while holding the **HOME** key.
4. Navigate to the ***COM Transmit Power Configuration*** page from the ***GTN Options*** page. Touch the **16W** key.
5. When the 16W COM feature is activated, the **16W** key will be lit green, as shown in Figure 3-15.

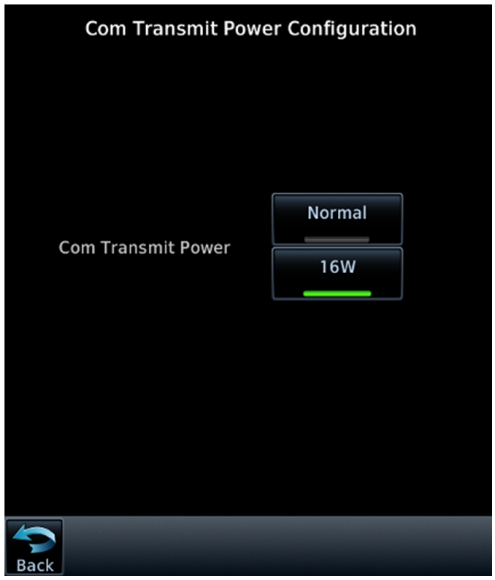

Figure 3-15 COM Transmit Power Configuration Page

3.3.4.4 Digital Radar Enablement (GTN 7XX Only)

This section describes how to re-enable the Digital Radar feature, which allows approved ARINC 708 weather radars to be interfaced with the GTN 7XX.

1. Turn the GTN off by opening the NAV/GPS circuit breaker.
2. Remove the database SD card from the data card slot and insert the Digital Radar Enablement Card (P/N 010-00878-42).
3. Enter Configuration mode on the GTN by applying power to the GTN (i.e., closing the circuit breaker) while holding the **HOME** key.
4. Go to the ***Weather Radar*** page from the ***GTN Options*** page. Touch the **Digital Radar** key, as shown in Figure 3-16.
5. When prompted, touch **Yes** to enable Digital Weather Radars. When the feature is activated, the **Digital Radar** key will be lit green.

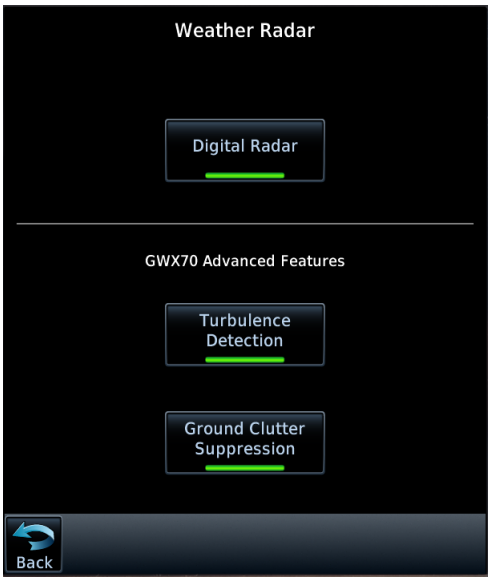

Figure 3-16 Weather Radar Page

3.3.4.5 GWX 70/75 Advanced Features (GTN 7XX Only)

The GTN 7XX can enable two Doppler radar features for the GWX 70/75. A Radar Turbulence Detection Card (P/N 010-00878-45 or 010-00878-47 (dual install)) is needed for Turbulence Detection and a Radar Automatic Ground Clutter Suppression Enablement Card (P/N 010-00878-44 or 010-00878-46 (dual install)) is needed for Ground Clutter Suppression.

To enable Radar Turbulence Detection:

1. Turn the GTN off by opening the NAV/GPS circuit breaker.
2. Remove the database SD card from the data card slot and insert the Radar Turbulence Detection Enablement Card (P/Ns 010-00878-45 or 010-00878-47).
3. Enter Configuration mode on the GTN by applying power to the GTN (i.e., closing the circuit breaker) while holding the **HOME** key.
4. Navigate to the ***Weather Radar*** page from the ***GTN Options*** page. Touch the **Turbulence Detection** key, as shown in Figure 3-16.
5. When prompted, touch **Yes** to enable Turbulence Detection. When the feature is activated, the **Turbulence Detection** key will be lit green.

To enable Ground Clutter Suppression:

1. Turn the GTN off by opening the NAV/GPS circuit breaker.
2. Remove the database SD card from the data card slot and insert the Radar AGCS Enablement Card (P/Ns 010-00878-44 or 010-00878-46).
3. Enter Configuration mode on the GTN by applying power to the GTN (i.e., closing the circuit breaker) while holding the **HOME** key.
4. Navigate to the ***Weather Radar*** page from the ***GTN Options*** page. Touch the **Ground Clutter Suppression** key, as shown in Figure 3-16.
5. When prompted, touch **Yes** to enable Ground Clutter Suppression. When the feature is activated, the **Ground Clutter Suppression** key will be lit green.

3.3.4.6 Search and Rescue Features

The GTN 6XX/7XX can enable Search and Rescue features. A Search and Rescue Enablement Card (P/N 010-00878-03) is needed for enablement.

To enable Search and Rescue features:

1. Turn the GTN off by opening the NAV/GPS circuit breaker.
2. Remove the database SD card from the data card slot and insert the Search and Rescue Enablement Card (P/N 010-00878-03).
3. Enter the Configuration mode on the GTN by applying power to the GTN (i.e., closing the circuit breaker) while holding the **HOME** key.
4. Go to the ***Search and Rescue Configuration*** page from the ***GTN Options*** page. Touch the **Search and Rescue** key, as shown in Figure 3-17.
5. When prompted, touch the **Yes** key to enable Search and Rescue.
6. Select the Search and Rescue (SAR) patterns desired in the SAR patterns section of the options page, as shown in Figure 3-17.



Figure 3-17 Search and Rescue Configuration Page

3.3.5 GTN Diagnostics Page

The ***GTN Diagnostics*** page is accessed from the ***Configuration Mode*** home page and is a useful tool for diagnosing issues and troubleshooting problems. Ground checks are performed using the tools on this page.

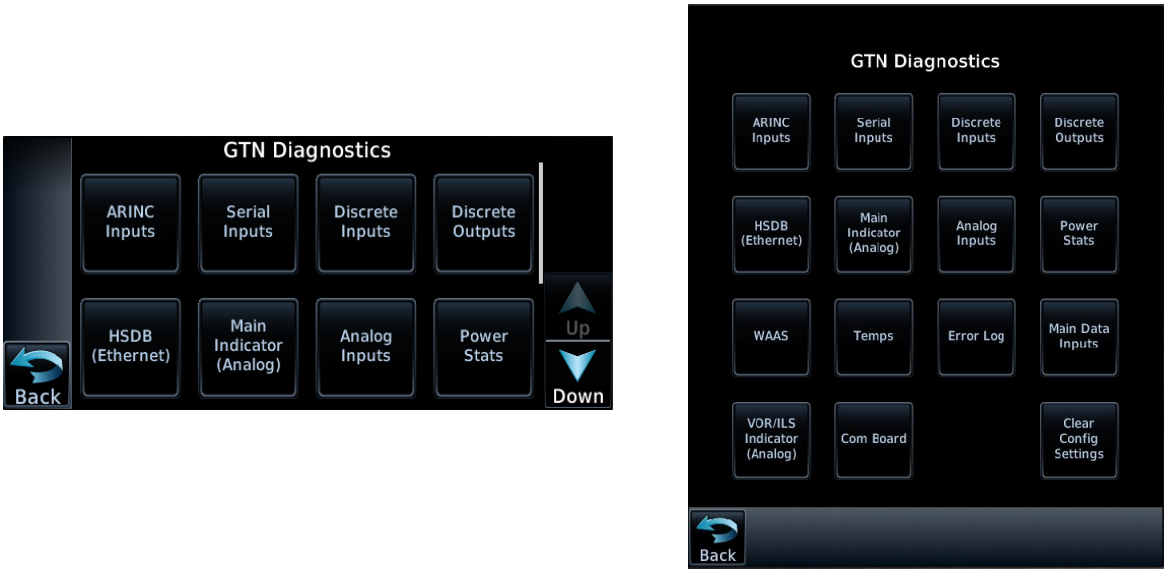

Figure 3-18 GTN 6XX and 7XX Diagnostics Pages

ARINC Inputs

This displays the ARINC 429 data that is being received over each ARINC 429 port. Each port is chosen for display by touching the **Port** key and toggling between the input ports. Select a port to display. The GTN will then display the label, SSM, Data, and SDI for each ARINC 429 input port. This is useful for determining if the expected labels are being received and for troubleshooting incorrect or swapped wiring to the input ports. The data log can be paused by toggling the **Pause** key. Clear the data log by touching the **Clear Log** key.

Serial Inputs

This displays the serial data that is being received and is useful for determining if the GTN is receiving data on each connected port. Select the desired port by touching the **Port** key and selecting the RS-232 channel from the list. The data log can be paused by toggling the **Pause** key. Clear the data log by touching the **Clear Log** key.

Discrete Inputs

This displays the state of each of the discrete input pins on the GTN. This page is useful for troubleshooting discrete wiring issues.

Discrete Outputs

This displays the state of each of the discrete outputs and allows them to be toggled between *Active* and *Inactive*. This is useful for ensuring that annunciator and signal outputs are properly connected to annunciator lights or other LRUs, and that they are receiving the signal.

HSDB Ethernet

This displays the status of each HSDB port to be displayed. This page displays whether or not each port is receiving data and displays whether the port is connected or not connected. The communication status of each installed HSDB LRU is displayed.

Main Indicator (Analog)

This displays the CDI connected to the main board (P1001) to be ground checked and allows the interface to be verified.

Analog Inputs

This displays the bus voltage setting for Lighting Bus 1 and Lighting Bus 2 and the input voltage setting for each bus. It displays synchro heading input diagnostics information, such as heading angle, heading valid status, AC voltage, and AC frequency.

Power Stats

This displays the number of times the GTN has powered up and the total elapsed operating hours for the GTN.

WAAS Diagnostics

This page displays the WAAS engine status, including UTC date/time, current Lat/Lon, overall navigation status, oscillator temperature, and AGC voltage. This page allows the GPS/WAAS engine to be reset.

Temps

This page displays the current, minimum, maximum, and average board temperatures for the LED Board, Main Board, Display Interface Board, GPS/WAAS Board, and COM Board.

Error Log

This page allows the error log to be written to the SD card in the front slot. It allows the error log to be cleared.

Main Data Inputs

This page allows the data on ARINC 429, RS-232, and other electrical inputs to be monitored. This is used for checking electrical interfaces during installation and troubleshooting. Information that is not being received by the GTN is dashed out.

VOR/ILS Indicator (Analog)

This page allows the CDI connected to the NAV board (P1004) to be ground checked and allows the NAV indicator interface to be verified.

COM Board Diagnostics Page

This page displays status of the FPGA flash, nonvolatile memory, synthesizer lock calibration, and reversionary, as well as the transmitter power limit.

Clear Config Settings

CAUTION

*This key should only be pressed if the intent is to clear all configuration settings. Touching the **Clear Config Settings** key opens a confirmation window to reset all of the settings stored in the configuration module to their defaults.*

3.4 Database Updates

CAUTION

The databases on the GTN Database Card are locked to specific GTN installations. The first time the GTN Database Card is inserted into a GTN, it associates exclusively with that particular GTN and will not work in other installations.

The GTN utilizes various databases. All databases are loaded to the GTN through the single data card that is inserted into the vertical slot on the left side of the GTN. The Navigation, Basemap, Safetaxi, and Obstacle databases are stored internally on the GTN. The Terrain, Flitecharts, and Chartview databases are stored on the data card. Databases are updated by removing the database card from the GTN, updating the database on the card, and re-inserting the card. Database updates can be applied in Normal mode at power-up. Alternatively, the databases can be updated in Configuration mode through the ***Updates*** page. The GTN, by default, will only update to effective databases. If loading databases that are not yet effective, or if the GTN GPS time is out-of-date, press and hold the dual-concentric knob during power-up to install all database updates from the data card.

Databases can also be updated using a Flight Stream 510 wireless data card and a portable device. When powering on in Normal mode with a Flight Stream 510 inserted into the data card slot, the GTN will provide on-screen instructions on how to transfer databases from a portable device (with a compatible application) over Wi-Fi.

Database cards and the Flight Stream 510 should not be swapped between GTNs if multiple units are installed.

GTN users can update their database card by purchasing database subscription updates from Garmin. Contact Garmin at (866) 739-5687 or go to flyGarmin.com for more information and instructions.

For a summary of the database location and update rate, refer to Table 3-1. The GTN Database Card (Garmin P/N 010-00900-00) includes:

- Basemap
- Obstacle
- SafeTaxi
- Navigation

Table 3-1 GTN Database Summary

Database	Update Rate	Stored Location
Terrain Database	Periodic (when available)	Data card
FliteCharts Database	28 Days	Data card
ChartView Database	14 Days	Data card
Obstacle Database with Hotlines	56 Days	Internal
SafeTaxi Database	56 Days	Internal
Basemap Database	Periodic (when available)	Internal
Navigation Database	28 Days	Internal

4 INSTRUCTIONS FOR CONTINUED AIRWORTHINESS

4.1 Airworthiness Limitations 4-2
4.2 Servicing Information 4-2
4.2.1 Periodic Maintenance 4-2
4.2.2 Special Tools 4-2
4.3 Maintenance Intervals 4-3
4.4 Visual Inspection 4-5
4.5 Electrical Bonding Test 4-6
4.5.1 GTN Bonding Check (Metallic or Tube-and-Fabric Aircraft) 4-6
4.5.2 GTN (Composite Aircraft) 4-6
4.5.3 GMA 35 (Metallic or Tube-and-Fabric Aircraft) 4-7
4.5.4 GMA 35 (Composite Aircraft) 4-8
4.5.5 Flight Stream 210 (Metallic or Tube-and-Fabric Aircraft) 4-8
4.5.6 Flight Stream 210 (Composite Aircraft) 4-8
4.6 Transient Voltage Suppressor (TVS) (If Installed) 4-9
4.6.1 GTN TVS1 Check (GTN #1 Only) 4-9
4.6.2 GTN TVS2 Assembly Check (GTN #1 Only) 4-10
4.7 GPS/SBAS Antenna Cable Overbraid Inspection (If Installed) 4-11
4.8 WXR HSDB Cable Overbraid Inspection (If Installed) 4-11

4.1 Airworthiness Limitations

There are no new (or additional) airworthiness limitations associated with this equipment and/or installation.

The Airworthiness Limitations section is FAA approved and specifies maintenance required under §43.16 and §91.403 of Title 14 of the Code of Federal Regulations unless an alternative program has been FAA approved.

	Erik Frisk	03-JAN-2020
FAA APPROVED	Erik Frisk ODA STC Unit Administrator ODA-240087-CE	Date

4.2 Servicing Information

The GTN, GMA, and Flight Stream 210 do not require servicing. In the event of system failure, troubleshoot the GTN 6XX/7XX, Flight Stream 210, Flight Stream 510, and GMA 35 in accordance with Section 5.

4.2.1 Periodic Maintenance

The GTN and GMA 35 are designed to detect internal failures. A thorough self-test is executed automatically upon application of power to the units. The built-in tests (BIT) are continuously executed. Detected errors are indicated as failure annunciations, system messages, or a combination of the two.

Antenna installations are not covered under this STC. Inspect and maintain all antennas in accordance with the data provided for that specific antenna installation.

4.2.2 Special Tools

A milliohm meter with an accuracy of ±0.1 mΩ (or better) is required to measure the electrical bonding between the GTN/GMA system components and aircraft ground.

4.3 Maintenance Intervals

Table 4-1 Periodic Maintenance

Item	Description/Procedure	Interval
Equipment Removal and Replacement	Removal and replacement of the following items. Refer to Section 6 of this document for instructions. • GTN 6XX/7XX, Flight Stream 210, Flight Stream 510, or GMA 35 units • NAV antenna cable splitter • NAV antenna cable diplexer • Fan	On Condition
Cleaning the Front Panel	The front bezel, keypad, and display can be cleaned with a soft cotton cloth dampened with clean water. DO NOT use any chemical cleaning agents. Care should be taken to avoid scratching the surface of the display.	On Condition
Display Backlight	The display backlight LEDs are rated by the manufacturer as having a usable life of at least 36,000 hours. This life may be more or less than the rated time depending on the operating conditions of the GTN. Over time, the backlight lamp may dim and the display may not perform as well in direct sunlight conditions. The user must determine by observation when the display brightness is not suitable for its intended use. Contact the Garmin factory repair station when the backlight lamp requires service.	On Condition
Battery Replacement	The GTN has an internal keep-alive battery that will last about 10 years. The battery is used for GPS system information. Regular planned replacement is not necessary. The GTN will display a “low battery” message when replacement is required. Once the low battery message is displayed, the battery should be replaced within 1 to 2 months. If the battery is not replaced and becomes totally discharged, the GTN unit will remain fully operational, but the GPS signal acquisition time may be increased. There is no loss of function or accuracy of the GTN unit with a dead battery. The battery must be replaced by the Garmin factory repair station or factory authorized repair station.	On Condition
Test - Bonding Check	Perform an electrical bonding check of the GTN, GMA 35 (if installed), and Flight Stream 210 (if installed) per Section 4.5.	Every 10 years or 2000 flight hours, whichever comes first
Test TVS Lightning Protection	The GTN #1 main power input has a TVS located at the LRU, for **IFR non-metallic aircraft only**. TVS1 and TVS2 must be checked or replaced in accordance with Section 4.6.	24 Calendar Months

Item	Description/Procedure	Interval
Test Lightning Protection	The GTN #1 main power input and NAV power input will have a TVS located at the LRU, for **IFR non-metallic aircraft only**. TVS1 and TVS2 must be replaced in accordance with Section 6.9. Conduct a visual check of the GPS/SBAS antenna cable overbraid in accordance with Section 4.7. Conduct a visual check of the WXR cable overbraid in accordance with Section 4.8, if installed.	After a suspected or actual lightning strike
Visual Inspection	The GTN unit, GMA 35 (if installed), Flight Stream 210 (if installed), Flight Stream 510 (if installed), switches, and wiring harnesses should be inspected to ensure continued integrity of the installation. These items must be inspected in accordance with Section 4.4.	12 Calendar Months

4.4 Visual Inspection

CAUTION

Take care when tightening the mounting screws of the Flight Stream 210. Excessive tightening may damage the mounting flange.

Conduct a visual check of the GTN unit(s), switches, GMA 35 (if installed), Flight Stream 210 or Flight Stream 510 (if installed), and their wiring harnesses to ensure they continue to comply with STC SA02019SE-D.

1. Inspect the GTN unit(s), GMA 35, and Flight Stream 210 for security of attachment, including visual inspection of mounting racks and other supporting structure attaching the racks to aircraft instrument panel.
   - **GTN 6XX/7XX -** Verify the countersunk fastener heads are in full contact with the unit mounting rack holes. Re-torque the mounting screws 12-15 in-lbf, if required
   - **GMA 35 -** If the GMA 35 is installed, verify the countersunk fastener heads are in full contact with the unit mounting rack holes. Re-torque the GMA 35 mounting screws to 8.5-9.5 in-lbf, if required. For installations that use a hook and loop fastener to secure the GMA 35c Bluetooth antenna mount, ensure the hook and loop bond is firm. If the hook and loop fastener is worn, replace it
   - **Flight Stream 210 -** If the Flight Stream 210 is installed, and screws are not securely attached, tighten any loose Flight Stream 210 mounting screws (as necessary) to snug plus one-quarter turn. If required, re-torque bonding strap hardware to 12-15 in-lbf
   - **Flight Stream 510** - Ensure the data card is properly oriented (label facing right), fully inserted, and locked into position in the card slot on the front-left side of the GTN.
2. Inspect for corrosion.
3. Inspect switches, knobs, and buttons for damage.
4. Inspect condition of wiring, shield terminations, routing, and attachment/clamping.
5. Check the fan intake slots on the sides and bottom of the GTN unit's bezel for dust, dirt, or obstructions. Clean as needed.
6. Conduct a visual check of the GPS/SBAS antenna cable overbraid (if installed).
7. Conduct a visual check of the WXR cable overbraid (if installed).
8. Conduct a visual check of any bonding strap or conductive tape used for electrical bonding or RF ground plane (if installed).
9. Replace any damaged or torn strap. Refer to Section 6.12 or Section 6.13 for details.
10. Replace any torn bonding tape using a heavy duty aluminum foil tape, such as 3M P/N 436 or 438 or another foil with aluminum that is 7.2 mils thick or greater. If strap termination hardware is loose, tighten and re-test bonding. Refer to Section 4.5 for details.

4.5 Electrical Bonding Test

4.5.1 GTN Bonding Check (Metallic or Tube-and-Fabric Aircraft)

NOTE

If the GMA 35 is installed (GTN 7XX only), it must be removed from its rack and the GMA 35 backplate assembly must be removed prior to performing step 3. When a GMA 35 bonding check is planned, perform the GMA 35 bonding check prior to re-installing the GTN backplate assembly to the rack.

NOTE

A bonding test failure may occur if a fastener is not secured to the specified torque value. For installations that use screws in lieu of rivets to secure the rack to surrounding structure, verify that the screws are torqued to the appropriate value before proceeding to remove the rack. Refer to Section 4.4 for torque values.

Perform an electrical bonding check as follows:

1. Remove the GTN 6XX or GTN 7XX from the mounting rack.
2. Remove the backplate assembly from the rack.
3. Measure the resistance between the mounting rack and nearby exposed portion of aircraft metallic structure and verify it is less than or equal to 5 mΩ.

In the event of bonding test failure, remove the GTN rack, clean the attachment points with a bonding brush at both the GTN rack and the aircraft, and re-attach the rack to the rails in the panel. Measure the resistance between the mounting rack and nearby exposed portion of aircraft metallic structure and ensure that the resistance is less than or equal to 2.5 mΩ.

4. Re-install the backplate assembly and re-install the GTN in the mounting rack.

4.5.2 GTN (Composite Aircraft)

NOTE

For GTN 7XX only: *if the GMA 35 is installed, it must be removed from its rack and the GMA 35 backplate assembly must be removed prior to performing step 3.*

NOTE

A bonding test failure may occur if a fastener is not secured to the specified torque value. For installations that use screws in lieu of rivets to secure the rack to surrounding structure, verify that the screws are torqued to the appropriate value before proceeding to remove the rack. Refer to Section 4.4 for torque values.

Perform an electrical bonding check as follows:

1. Remove the GTN 6XX or GTN 7XX from the mounting rack.
2. Remove the backplate assembly from the rack.
3. Measure the resistance between the mounting rack and the instrument panel, verify it is less than or equal to 10 mΩ.

In the event of bonding test failure, remove the GTN rack, clean the attachment points with a bonding brush at both the GTN rack and the aircraft, and re-attach the rack to the rails in the panel. Measure the

resistance between the mounting rack and the instrument panel and ensure that the resistance is less than or equal to 5 mΩ.

4. Re-install the backplate assembly and re-install the GTN in the mounting rack.

4.5.3 GMA 35 (Metallic or Tube-and-Fabric Aircraft)

NOTE

A bonding test failure may occur if a fastener is not secured to the specified torque value. For installations that use screws in lieu of rivets to secure the rack to surrounding structure, verify that the screws are torqued to the appropriate value before proceeding to remove the rack. Refer to Section 4.4 for torque values.

NOTE

The GTN 7XX backplate assembly must be removed from the GTN rack prior to performing step 4.

A bonding check is required for the GMA 35. Perform an electrical bonding check as follows:

1. Gain access to the GMA 35 by removing the GTN 7XX.
2. Remove the GMA unit from the mounting rack.
3. Remove backplate assembly from the rack.
4. Measure the resistance between the mounting rack and nearby exposed portion of aircraft metallic structure and verify it is less than or equal to 5 mΩ.

In the event of bonding test failure, remove the GMA 35 rack and clean the attachment points with a bonding brush at both the GMA rack and the aircraft attachment points. Measure the resistance between the mounting rack and nearby exposed portion of aircraft metallic structure and ensure that the resistance is less than or equal to 2.5 mΩ.

5. Re-install the backplate assembly and re-install the GMA unit in the mounting rack.

4.5.4 GMA 35 (Composite Aircraft)

NOTE

A bonding test failure may occur if a fastener is not secured to the specified torque value. For installations that use screws in lieu of rivets to secure the rack to surrounding structure, verify that the screws are torqued to the appropriate value before proceeding to remove the rack. Refer to Section 4.4 for torque values.

NOTE

The GTN 7XX backplate assembly must be removed from the GTN rack prior to performing step 4.

1. Gain access to the GMA 35 by removing the GTN 7XX.
2. Remove the GMA unit from the mounting rack.
3. Remove the backplate assembly from the rack.
4. Measure the resistance between the mounting rack and the instrument panel and verify it is less than or equal to 10 mΩ.

In the event of bonding test failure, remove the GMA 35 rack and clean the attachment points with a bonding brush at both the GMA rack and the aircraft attachment points. Re-verify the resistance between the mounting rack and the instrument panel and ensure that the resistance is less than or equal to 5 mΩ.

5. Re-install the backplate assembly and re-install the GMA unit in the mounting rack.

4.5.5 Flight Stream 210 (Metallic or Tube-and-Fabric Aircraft)

1. Disconnect the shield terminations from the Flight Stream connector backshell.
2. Measure the resistance between the connector and nearby exposed portion of aircraft metallic structure and check that it is less than or equal to 20 mΩ.

In the event of bonding test failure, remove the Flight Stream connector bonding strap from the aircraft ground plane and clean the attachment point with a bonding brush. Re-attach the bonding strap to the aircraft ground plane; torque to 12-15 in-lbf. Measure the resistance between the Flight Stream connector and aircraft structure, ensuring that the resistance is less than or equal to 10 mΩ. If cleaning the far side of the strap is not enough, remove, clean, and re-attach on the Flight Stream 210 side.

3. Connect the shield terminations to the Flight Stream connector backshell.

4.5.6 Flight Stream 210 (Composite Aircraft)

1. Disconnect the shield terminations from the Flight Stream connector backshell.
2. Measure the resistance between the connector and instrument panel (or other aircraft ground) and check that it is less than or equal to 20 mΩ.

In the event of bonding test failure, remove the Flight Stream connector bonding strap from the aircraft ground plane and clean the attachment point with a bonding brush. Re-attach the bonding strap to the aircraft ground plane; torque to 12-15 in-lbf. Measure the resistance between the Flight Stream connector and aircraft ground, ensuring that the resistance is less than or equal to 10 mΩ. If cleaning the far side of the strap is not enough, remove, clean, and re-attach on the Flight Stream 210 side.

3. Connect the shield terminations to the Flight Stream connector backshell.

4.6 Transient Voltage Suppressor (TVS) (If Installed)

After a suspected lightning strike, each TVS and TVS assembly (if installed) must be replaced. Refer to Section 6.9 for information on installing in-line TVSs.

4.6.1 GTN TVS1 Check (GTN #1 Only)

NOTE

The GTN should be the only LRU connected to the NAV/GPS circuit breaker. If other equipment is connected to the NAV/GPS circuit breaker, it must be disconnected prior to conducting the following check. No other TVS devices should be on this circuit. If the TVS being checked is not isolated, erroneous readings may result.

For a dual GTN installation, only GTN #1 will have the TVS protection. The following checks will only apply to GTN #1. Reference the appropriate GTN power interconnect drawings. To check the TVS on the GTN power inputs, the following steps should be followed:

1. Remove the GTN as described in Section 6.1.
2. Open the GTN's circuit breaker and use a multimeter to perform a diode check between P1001-19 and ground:
   a. The meter should indicate open with the red lead on P1001-19 and the black lead on ground.
   b. The meter should indicate a diode drop of between 2.0V – 2.5V for 30KPA48A diode and a drop of 1.5V – 2.0V for 15KPA48A diode with the red lead on ground and the black lead on P1001-19.
      i) If the diode drop is outside of the above range, replace the TVS.
      ii) If the meter indicates a short during steps 2a or 2b, replace the TVS.
      iii) If the meter indicates an open in both directions, check the continuity of the fuse.
      iv) If the fuse is open, replace the fuse and repeat the check.
      v) If the fuse is good, check the wiring for faults. If the wiring is good, replace the TVS.
3. Verify continuity between P1001-19 and P1001-20.
4. Re-install the GTN as described in Section 6.1 and reset the GTN's circuit breaker.

4.6.2 GTN TVS2 Assembly Check (GTN #1 Only)

The TVS assembly (refer to Section 6.9) and fuse on the power bus side of GTN #1 must be inspected. Verify operation of all four TVSs prior to replacing any failed TVS.

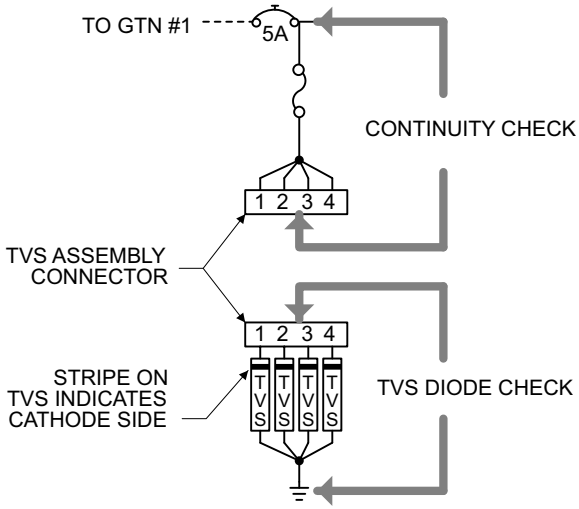

Figure 4-1 TVS Assembly Check

Check the TVS assembly (TVS2) as follows:

1. Ensure that the power to the bus is off and disconnect the connector in the TVS assembly.
2. Use a multimeter to perform a diode check between the first connector contact (socket contact on the first TVS) and ground. Refer to Figure 4-1 for additional details.
3. The meter should indicate open with the red lead on the connector socket contact and the black lead on ground.
    a. The meter should indicate a diode drop of between 2.0V and 2.5V with the red lead on ground and the black lead on the connector socket contact.
        i) If the diode drop is outside of the above range, replace the TVS diode corresponding to the contact being checked.
        ii) If the meter indicates a short, replace the TVS diode corresponding to the contact being checked.
        iii) If the meter indicates an open, check the wiring for faults. If the wiring is good, replace the TVS diode corresponding to the contact being checked.
4. Repeat checks in the previous step for each of the three remaining contacts/TVS diodes.
5. On the other connector, verify continuity between each of the four contacts and the power bus.
    a. If there is no continuity between the power bus and all four contacts, check the continuity of the fuse.
    b. If there is continuity between the power bus and some contacts, but not others, check the wiring to the open contacts and repair as necessary.
6. Reconnect the connector in the TVS assembly.

4.7 GPS/SBAS Antenna Cable Overbraid Inspection (If Installed)

The GPS/SBAS antenna cable overbraid must be inspected after a known or suspected lightning strike. Check the antenna and overbraid for the following:

1. Check the cable overbraid for pinching, melting, or evidence of arcing at the GPS/SBAS antenna end and at the GTN 6XX/7XX.
2. Check the lug at the GTN end for evidence of arcing and verify that the lug is still secured to the overbraid and to the GTN connector shield block.
3. Check that the overbraid is securely attached at the GPS/SBAS antenna end and at the GTN6XX/7XX.

If any of these checks shows evidence of a lightning strike, replace the overbraid assembly in accordance with Section 6.10.

4.8 WXR HSDB Cable Overbraid Inspection (If Installed)

The WXR HSDB cable overbraid must be inspected after a known or suspected lightning strike. Check the overbraid for the following:

1. Check the cable overbraid for pinching, melting, or evidence of arcing at the WXR end and at the bulkhead to which the WXR R/T is mounted.
2. Check the lug at the WXR end for evidence of arcing and verify that the lug is still secured to the overbraid and to the WXR shield block.
3. Check that the overbraid is securely attached at the bulkhead end.

If any of these checks shows evidence of a lightning strike, replace the overbraid assembly in accordance with Section 6.11.

5 TROUBLESHOOTING

5.1 GTN General Troubleshooting 5-2
5.2 GTN Failure Annunciations 5-6
5.3 GTN System Messages 5-7
5.3.1 GTN System Related Alerts 5-7
5.4 Flight Stream Troubleshooting 5-23
5.5 GMA 35 Troubleshooting 5-25
5.6 GMA 35 Failure Annunciations 5-26
5.7 GMA 35 System Messages 5-26

5.1 GTN General Troubleshooting

This section provides information to assist troubleshooting if problems occur after completing the maintenance. Refer to the GTN System Configuration Log retained in the aircraft permanent records for a list of the interfaced equipment and system configuration data. When troubleshooting the GTN or GMA system, refer to the wire routing drawings and interconnect wiring diagrams that are retained in the aircraft permanent records.

Table 5-1 GTN Troubleshooting Guide

Problem	Possible Cause	Corrective Action
The GTN does not power on.	The unit is not getting power to the main connector P1001.	Ensure power is connected to the main 78-pin connector P1001, pins 19 and 20, and ground to P1001, pins 77 and 78. Check circuit breakers and main avionics switch.
The GTN does not compute a position.	Not receiving adequate GPS signals.	Check the GPS antenna connections. Make sure the aircraft is clear of hangars, buildings, trees, etc.
		Wait 20 minutes for GTN to download full GPS almanac and acquire position.
GPS signal levels drop when avionics are turned on.	Noise interference from other avionics.	Turn all avionics off, then turn on each piece one at a time to isolate the source of the interference. Route GPS cable and locate GPS antenna away from sources of interference.
The GPS signal levels are very low.	Improper antenna installation or coaxial routing.	Check GPS antenna installation, connections, and cable routing. The GPS antenna must be mounted on the top of the aircraft.
	Antenna shaded from satellites.	Make sure the aircraft is clear of hangars, buildings, trees, etc.
	RF interference at 1575.42 MHz from VHF COM.	Add a 1575.42 MHz notch filter in COM coaxial. Fix or replace the COM. Disconnect the ELT antenna coaxial to check for possible re-radiation. Move GPS antenna further from the COM antenna.

Problem	Possible Cause	Corrective Action
The GTN COM does not transmit.	The PTT input is not being pulled low.	Check that the MIC 1 Transmit (P1003-11) input is pulled low for transmit. The state of this discrete input can be monitored on the ***Discrete Inputs*** page found on the ***GTN Diagnostics*** page. Refer to Section 3.3.5.
	No transmit power to COM.	Make sure power input is connected to the COM 44-pin connector P1003-30, -43, and -44, and ground to P1003-37, -38, and -40.
	The input voltage is too low.	Increase input supply voltage to >11VDC.
The COM sidetone level is too low or too high.	Wrong type of headsets or sidetone level needs adjustment.	If necessary, adjust the sidetone level. Sidetone adjustment is found on the ***COM Setup Config Mode*** page.
OBS Resolver won't calibrate.	Incompatible resolver or improper connection.	Check the resolver specifications and wiring.
OBS indication on GTN does not agree with OBS setting.	GTN resolver input not calibrated correctly.	Check wiring and calibration.
	Resolver has not been calibrated.	
GTN Terrain Audio not heard.	Terrain audio volume level set too low.	Increase Terrain audio volume level. Check wiring.
	Check audio panel volume and audio wiring.	
	Main software version has just been updated.	Allow up to 5 minutes for the Terrain audio clips to load. Cycle power on the GTN and verify that Terrain audio is working properly.
GTN is not receiving heading from compass system (ARINC 429 heading input used).	ARINC 429 input port speed not correct.	Check ARINC 429 input port speed setting for port that the device is connected to and verify that the speed is correct for that device.
	Wiring connections are incorrect.	The raw data being received by the GTN can be monitored on the ***ARINC Inputs*** page found on the ***GTN Diagnostics*** page. Refer to Section 3.3.5. Check wiring.

Problem	Possible Cause	Corrective Action
Autopilot is not getting GPSS/Roll Steering data from the GTN (ARINC 429 Roll Steering used).	GTN does not have a position or flight plan entered.	Acquire GPS position and enter a flight plan.
	GTN ARINC 429 output not configured correctly.	Check ARINC 429 output port setting for port to which the autopilot is connected.
	ARINC 429 output port speed not correct.	Check ARINC 429 output port speed setting for port that autopilot is connected to and verify that the speed is correct for autopilot.
	Wiring connections are incorrect.	Check wiring.
	Certain autopilots require groundspeed for GPSS to be enabled.	Ensure that groundspeed is provided if required by the autopilot. This can be accomplished using GTN Demo mode.
Tuning data not updating DME.	Incorrect configuration.	Check the DME Channel Mode on the ***VOR/LOC/GS CDI*** page.
	Wiring connections are incorrect.	Check wiring.
	Output not configured correctly.	
ARINC 429 device is not receiving data from the GTN.	GTN ARINC 429 output not configured correctly.	Check ARINC 429 output port setting for port that device is connected to.
	Receiving LRU ARINC 429 input port speed not correct.	Check ARINC 429 input port speed setting for the port that the device is connected to and verify that the speed is correct for that device.
	Wiring connections are incorrect.	Check wiring.
RS-232 device is not communicating with the GTN.	GTN RS-232 port not configured correctly.	Check RS-232 port setting for the port that the device is connected to.
	Improper setup on the remote device.	Verify the configuration of the other device.
	Device not compatible or improper connection.	Verify GTN RX is connected to remote device TX and GTN TX is connected to remote device RX.
	Multiple TX lines connected together.	Verify that there is only one TX source per RX port.
	Wiring connections are incorrect.	Check wiring.
	Baud rate and parity settings not set correctly.	Ensure the correct baud rate and parity settings are selected in Configuration mode.
CDI scaling on EFS 40/50 is not correct.	On EFS 40/50, (prior to SG465 software version 1501) FMS #1/#2 configuration is not set to KLN 90-GPS.	Reconfigure EFS 40/50 for KLN 90-GPS on FMS #1/#2 inputs as appropriate.

Problem	Possible Cause	Corrective Action
GTN boots into Configuration mode rather than Normal mode.	Software Loader Card is inserted into SD card slot.	Remove Software Loader Card and insert database card. Ensure GTN powers up in Normal mode after this. Reload software into the GTN. Refer to Section 3.2. Ensure the GTN powers up in Normal mode after this.

5.2 GTN Failure Annunciations

If data fields become invalid, the GTN typically annunciates the failures with a large red "X", as shown in Figure 5-1.



Figure 5-1 Failure Screen

5.3 GTN System Messages

5.3.1 GTN System Related Alerts

Table 5-2 Alert Text Troubleshooting Guide

Alert Text	Possible Cause	Corrective Action
CROSSFILL ERROR - Crossfill is inoperative. See CRG for crossfilled items.	An error was detected during unit-to-unit communication of data. This can be caused by problems with HSDB wiring or by either GTN needing service. Refer to the Cockpit Reference Guide (CRG) for crossfilled items.	Start both GTNs in Configuration mode and ensure that both GTNs are configured for crossfill. Check J1002 connection on crossfilled GTN units. Ensure that P1002-10 of GTN #2 is connected to ground.
DEMO MODE - Demo mode is active. Do not use for navigation.	The GTN is in Demo mode and must not be used for actual navigation.	Check that the DEMO MODE SELECT* input (P1002-1) is not tied to ground. Ensure that the **Direct-To** key is not stuck.
CDI/HSI FLAG - Main lateral/vertical flag on CDI/HSI is inoperative.	The main lateral or vertical superflag has been turned off due to an overcurrent condition.	Check the GTN main lateral and vertical superflag connections to the CDI/HSI for correct wiring, shorts to ground, and overcurrent. Superflags should not drive more than 320 mA.
GTN - GTN needs service.	The GTN has detected an internal failure.	Contact Garmin Technical Support.
COOLING - GTN overtemp. Reducing backlight brightness.	The GTN has detected excessive display backlight temperature. The backlight has been automatically dimmed to reduce the unit temperature.	Check for adequate ventilation or check cooling airflow. Ensure the cooling fan is operating and is unobstructed.
KEY STUCK - HOME key is stuck.	The bezel's **Home** key is stuck in the enabled or pressed state.	Press the **Home** key again to cycle its operation. If the message persists, contact Garmin technical support.
KEY STUCK - Direct-to key is stuck.	The bezel's **Direct-To** key is stuck in the enabled or pressed state.	Press the **Direct-To** key again to cycle its operation. If the message persists, contact Garmin technical support.
KNOB STUCK - Dual concentric inner knob is stuck in the pressed position.	The inner large knob push-key is stuck in the enabled or pressed state. Knob is located on the right side of the unit.	Press the knob to cycle its operation. If the message persists, contact Garmin technical support.
KNOB STUCK - Volume knob is stuck in the pressed position.	The small knob push-key is stuck in the enabled or pressed state. Knob is located on the left side of the unit.	Press the knob to cycle its operation. If the message persists, contact Garmin technical support.

Alert Text	Possible Cause	Corrective Action
CROSSFILL ERROR - GTN software mismatch. See CRG for crossfilled items.	The software does not match between GTNs. Crossfill disabled. Refer to the Cockpit Reference Guide (CRG) for crossfilled items.	Check the software version of both GTNs and ensure they match. Update the software if needed.
CROSSFILL ERROR - GTN Navigation DB mismatch. See CRG for crossfilled items.	GTN #1 and GTN #2 have different cycles of the navigation database.	If it is desired to utilize the crossfill function, load the most current cycles of the navigation database to each GTN.
CONFIGURATION MODULE - GTN configuration module needs service.	The GTN configuration module has failed.	Verify the configuration module wiring is correct. Replace the configuration module.
	The GTN configuration module is incorrectly wired.	
DATABASE - Chart function unavailable.	The GTN is configured for ChartView or FliteCharts and chart verification has failed.	Re-install charts onto data card. Verify correct chart type is selected in the configuration options. If problem persists, contact Garmin technical support for service.
DATABASE - Terrain database is not installed, is corrupt, or is not valid for this system	The terrain database is not available, which could result from the database not being present at start-up or the database being corrupt.	Re-install the terrain database onto the card. If problem persists, contact Garmin technical support for service.
DATACARD ERROR - Data card is invalid or failed.	The data card is not being properly read by the GTN.	Load the terrain database and any Charts databases to a new data card. Replace the failed data card.
DATACARD REMOVED - Reinsert data card.	External data card was removed.	Re-insert data card.
DATA LOST - Pilot stored data was lost. Recheck settings.	User settings, such as map detail level, NAV range ring on/off, traffic overlay on/off, and alert settings, have been lost.	Re-check pilot-configurable settings.
FLIGHT PLAN IMPORT - Flight plan import failed.	The requested flight plan could not be imported because the GTN was unable to decode the contents of the flight plan.	If importing flight plan from an SD card, ensure flight plan is properly formatted per *Guideline for GTN Flight Plan and User Waypoint Files*. If the problem persists, contact Garmin technical support for service.

Alert Text	Possible Cause	Corrective Action
REMOTE KEY STUCK - Remote OBS key is stuck.	The remote **OBS** switch is stuck in the enabled or pressed state.	Press the switch again to cycle its operation. Go to the ***GTN DIAGNOSTICS - DISCRETE INPUTS*** page in Configuration mode and check that the state of the input changes when the **OBS** switch is pressed and released. Verify that the remote **OBS** switch wiring is correct. Contact Garmin technical support.
REMOTE KEY STUCK - Remote CDI key is stuck.	The remote **CDI** key is stuck in the enabled or pressed state.	Go to the ***GTN DIAGNOSTICS - DISCRETE INPUTS*** page in Configuration mode and check that the state of the input changes when the **CDI** switch is pressed and released. Verify that the **CDI** switch wiring is correct. Press the switch again to cycle its operation. Contact Garmin technical support.
REMOTE KEY STUCK - Remote go around key is stuck.	The remote **Go Around** switch is stuck in the enabled or pressed state.	Press the switch again to cycle its operation. Go to the ***GTN DIAGNOSTICS - DISCRETE INPUTS*** page in Configuration mode and check that the state of the input changes when the **Go Around** switch is pressed and released. If the state still shows as active, inspect the wiring to ensure that it is not loose or shorting to ground.
COOLING FAN - The cooling fan has failed.	The wiring to the fan may be faulty, the fan connector may be unplugged, or the fan may have failed.	• Check the wires between P1001-43, -58, and -59 and the fan to ensure they are not cut, damaged, or broken • Check that the fan connector is completely engaged • Check that the fan blades are not obstructed and they can rotate freely • Check P1001 for ground lugs pushing on fan The fan does not turn on if the unit is cool.
GNS CROSSFILL - GTN user waypoint(s) replaced with GNS user waypoint(s).	A user waypoint from the GNS replaced one or more existing waypoints on the GTN.	Ensure that the waypoints on the GNS have unique names before transferring to the GTN to avoid overwriting existing waypoints.

Alert Text	Possible Cause	Corrective Action
GNS CROSSFILL - Catalog full; not all GNS waypoint(s) transferred.	A user waypoint from the GNS could not be created because the user waypoint catalog is full.	Remove some of the waypoints from the catalog to make room for the waypoints from the GNS.
GNS CROSSFILL - Waypoint transfer failed.	Waypoint transfer failed/ incomplete.	The data transfer should be reattempted.
INTERNAL SD CARD ERROR - GTN needs service.	The GTN's internal data storage has become corrupt or nonfunctional.	Contact Garmin technical support.
INTERNAL SD CARD REMOVED - GTN needs service.	The GTN's internal data storage has been removed or has become nonfunctional.	Contact Garmin technical support.
USER WAYPOINT IMPORT - User waypoint import failed.	User Waypoint import failed due to improper format.	Ensure the media has the correct file format. Refer to *Guideline for GTN Flight Plan and User Waypoint Files*. If the problem persists, contact Garmin technical support for service.
Waiting to receive information from unit...	The GTN is not communicating with the remote LRU.	Ensure remote LRU is powered on. Check wiring and configuration.

5.3.1.1 COM Related Alerts

Table 5-3 COM Alert Troubleshooting Guide

Alert Text	Possible Cause	Corrective Action
COM RADIO - COM radio needs service.	A failure has been detected in the COM transceiver. The transceiver may still be usable.	This message may appear after operations in Configuration mode. Cycle power to the entire GTN (both GPS/NAV and COM circuit breakers) and see if the message has cleared.
		Contact Garmin technical support.
COM RADIO - COM radio may be inoperative.	The GTN is not able to communicate with its COM transceiver.	Verify that COM connector pins P1003-43 and P1003-44 are receiving aircraft power.
		Verify that COM connector pins P1003-37 and P1003-38 are connected to aircraft ground.
		If the message persists, contact Garmin technical support.
REMOTE KEY STUCK - COM push-to-talk key is stuck.	The **COM push-to-talk** switch is stuck in the enabled or pressed state.	Press the **PTT** switch to cycle its operation.
		Go to the ***GTN DIAGNOSTICS - DISCRETE INPUTS*** page in Configuration mode and check that the state of the input changes when the **PTT** switch is pressed and released.
		Verify that the **PTT** switch wiring is correct.
		If the message persists, contact Garmin technical support.
REMOTE KEY STUCK - COM remote transfer key is stuck.	The **COM remote transfer** key is stuck in the enabled or pressed state.	Go to the ***GTN DIAGNOSTICS - DISCRETE INPUTS*** page in Configuration mode and check that the state of the input changes when the **COM remote transfer** switch is pressed and released.
		Verify that the **COM remote transfer** switch wiring is correct.
		Press the **COM remote transfer** switch to cycle its operation.
		If the problem persists, contact Garmin technical support.

Alert Text	Possible Cause	Corrective Action
REMOTE KEY STUCK - COM remote frequency increment key is stuck.	The **COM remote frequency increment** key is stuck in the enabled or pressed state.	Go to the ***GTN DIAGNOSTICS - DISCRETE INPUTS*** page in Configuration mode and check that the state of the input changes when the **COM remote frequency increment** switch is pressed and released.
		Verify that the **COM remote frequency increment** switch wiring is correct.
		Press the **COM remote frequency increment** key to cycle its operation.
		If the problem persists, contact Garmin technical support.
REMOTE KEY STUCK - COM remote frequency decrement key is stuck.	**COM remote frequency decrement** key is stuck in the enabled or pressed state.	Press the **COM remote frequency decrement** key to cycle its operation.
		Go to the ***GTN DIAGNOSTICS - DISCRETE INPUTS*** page in Configuration mode and check that the state of the input changes when the **COM remote frequency decrement** switch is pressed and released.
		Verify that the **COM remote frequency decrement** switch wiring is correct.
		If the problem persists, contact Garmin technical support.
COM RADIO - COM overtemp or undervoltage. Reducing transmitter power.	The COM is reporting a high temperature.	Ensure the fan is functioning properly and check for adequate airflow around the unit.
		Ensure that the COM radio is receiving adequate input voltage (11-33 VDC).
COM RADIO - COM locked to 121.5 MHz. Hold remote COM transfer key to exit.	The **COM remote transfer** switch has been pressed for at least 2 seconds.	In Lockout mode, the COM will tune the active frequency to 121.5 MHz and not allow the frequency to be changed. COM Lockout mode can be exited by pressing the **COM remote transfer** switch for at least 2 seconds.

5.3.1.2 GPS/SBAS Related Alerts

Table 5-4 GPS/SBAS Alert Troubleshooting Guide

Alert Text	Possible Cause	Corrective Action
GPS RECEIVER - GPS receiver has failed. Check GPS coaxial for electrical short.	A failure has been detected in the GPS/SBAS receiver.	Verify that the center conductor is not shorted to the braid in the coaxial cable.
	GPS antenna cable may be shorted to ground.	Contact Garmin technical support for assistance.
GPS RECEIVER - GPS receiver needs service.	The GTN has detected an internal failure in the GPS/ SBAS receiver.	Contact Garmin technical support.
LOSS OF INTEGRITY (LOI) - Verify GPS position with other navigation equipment.	Improper antenna installation or coaxial routing.	Check GPS antenna installation, connections, and cable routing. The GPS antenna must be mounted on top of the aircraft.
	Antenna shaded from satellites.	Make sure the aircraft is clear of hangars, buildings, trees, etc.
	RF interference at 1575.42 MHz from VHF COM.	Move GPS antenna further from the COM antenna. Add a 1575.42 MHz notch filter in COM coaxial. Fix or replace the COM. Disconnect the ELT antenna coaxial to check for possible re-radiation.
GPS NAVIGATION LOST - Insufficient satellites. Use other navigation source.	There is no GPS fix available or the system is in Dead Reckoning mode.	Wait for GPS satellite geometry to improve.
		Ensure the aircraft has a clear view of the sky.
GPS NAVIGATION LOST - Erroneous position. Use other navigation source.	An internal position warning has occurred.	RAIM has determined that the info from one or more GPS satellites may be in error.
		Ensure the aircraft has a clear view of the sky.
GPS RECEIVER - Low internal clock battery.	The GTN has detected a low battery. Almanac data may have been lost.	Replace the battery.
MARK ON TARGET - Waypoint creation has failed. MOT requires GPS position.	Mark on target waypoint creation has failed because of missing GPS position.	Wait for GPS satellite geometry to improve. Ensure the aircraft has a clear view of the sky. Re-attempt waypoint creation.
SEARCHING SKY - Search-the-sky in progress.	The GTN is searching the sky for GPS satellites.	Wait 20 minutes for the unit to complete the cycle or until the current position is located.

5.3.1.3 VLOC/GS Related Alerts

Table 5-5 VLOC/GS Alert Troubleshooting Guide

Alert Text	Possible Cause	Corrective Action
VLOC RECEIVER - Navigation receiver needs service.	The GTN 650/750 has detected a failure in its navigation receiver.	Contact Garmin technical support.
VLOC RECEIVER - Navigation receiver has failed.	The GTN 650/750 has detected an internal failure in its VLOC receiver.	Contact Garmin technical support.
GLIDESLOPE - Glideslope receiver needs service.	The GTN 650/750 has detected an internal failure in its glideslope receiver.	Contact Garmin technical support.
GLIDESLOPE - Glideslope receiver has failed.	The GTN has detected an internal failure in its glideslope receiver.	Contact Garmin technical support.
REMOTE KEY STUCK - NAV remote transfer key is stuck.	**NAV remote transfer** key is stuck in the enabled or pressed state.	Press the **NAV remote transfer** switch to cycle its operation.
		Go to the GTN ***DIAGNOSTICS - DISCRETE INPUTS*** page in Configuration mode and check that the state of the input changes when the **NAV remote transfer** switch is pressed and released.
		Verify that the NAV remote transfer switch wiring is correct.
		If the problem persists, contact Garmin technical support.

5.3.1.4 Remote Transponder Related Alerts

Table 5-6 Remote Transponder Alert Troubleshooting Guide

Alert Text	Possible Cause	Corrective Action
TRANSPONDER 1 OR 2 - ADS-B Out system fault. Pressure altitude source inoperative or connection lost.	The transponder has lost communication with the pressure altitude source.	Verify wiring between the transponder and the pressure altitude source. If problem persists, contact Garmin technical support for service.
TRANSPONDER 1 OR 2 - Transponder has failed.	The transponder has detected an internal fault and transponder functionality may be unavailable.	Return unit to Garmin technical support for service.
TRANSPONDER 1 OR 2 - Transponder is in ground test mode.	The transponder is operating in a mode intended for ground testing.	Cycle the power to the transponder.
TRANSPONDER 1 OR 2 - Transponder overtemp.	The transponder is reporting that its internal temperature is above upper operating limits.	Check for adequate ventilation around the transponder.
TRANSPONDER 1 OR 2 - Transponder undertemp.	The transponder is reporting that its internal temperature is below lower operating limits.	Contact Garmin technical support for service if this message persists.
TRANSPONDER 1 - Transponder 1 needs service.	The transponder is reporting a system failure.	Refer to the transponder installation manual.
TRANSPONDER 2 - Transponder 2 needs service.	The transponder is reporting a system failure.	Refer to the transponder installation manual.
TRANSPONDER 1 - Transponder 1 is inoperative or connection to GTN is lost.	The GTN cannot communicate with the transponder or the transponder is reporting a system failure.	If two transponders are present, ensure that both GTNs are powered on.
		Check for proper configuration of the GTN and transponder RS-232 ports.
		Check for correct wiring.
		Refer to the transponder installation manual.
TRANSPONDER 2 - Transponder 2 is inoperative or connection to GTN is lost.	The GTN cannot communicate with the transponder or the transponder is reporting a system failure.	Ensure that both GTNs are powered on.
		Check for proper configuration of the GTN and transponder RS-232 ports.
		Check for correct wiring.
		Refer to the transponder installation manual.

Alert Text	Possible Cause	Corrective Action
TRANSPONDER - Transponder 1 and 2 Mode S addresses do not match.	The transponders are configured for different Mode S addresses.	Check the Mode S address for each transponder and verify that they match.
TRANSPONDER 1 – ADS-B is not transmitting position.	The transponder has insufficient data to support ADS-B.	Ensure the aircraft has a clear view of the sky.
		Refer to the transponder installation manual.
TRANSPONDER 2 - ADS-B is not transmitting position.	The transponder has insufficient data to support ADS-B.	Ensure the aircraft has a clear view of the sky.
		Refer to the transponder installation manual.

5.3.1.5 GAD 42 Alerts

Table 5-7 GAD 42 Alert Troubleshooting Guide

Alert Text	Possible Cause	Corrective Action
GAD 42 - GAD 42 configuration needs service.	GAD 42 not powered up.	Ensure that the GAD 42 is receiving power and is connected to ground.
	GTN is not receiving data from GAD 42.	Verify wiring between the GTN and the GAD 42.
GAD 42 - GAD 42 needs service.	GAD 42 is reporting an internal failure.	Contact Garmin technical support.

5.3.1.6 Traffic Related Alerts

Table 5-8 Traffic Alert Troubleshooting Guide

Alert Text	Possible Cause	Corrective Action
TRAFFIC - Traffic device is inoperative or connection to GTN is lost.	Traffic device is not powered up.	Ensure the traffic device is receiving power and is connected to ground.
		Verify the wiring between the GTN and the traffic device.
		Raw ARINC 429 data can be viewed on the ***GTN DIAGNOSTICS - ARINC INPUTS*** page in Config mode.
	Traffic device has failed.	
TRAFFIC - Traffic device battery low. Traffic device user config settings not saved.	The connected traffic system is reporting that it has a low battery.	Traffic system may require service. Refer to external traffic system maintenance manual for additional details.
TRAFFIC - TAS/TCAS has been in standby for more than 60 seconds.	The GTN is in the airborne state and the traffic device has been in standby for more than 60 seconds.	Troubleshoot the traffic system. Refer to traffic system installation manual.

5.3.1.7 Datalink Related Alerts

Table 5-9 Datalink Alert Troubleshooting Guide

Alert Text	Possible Cause	Corrective Action
DATALINK - FIS-B weather has failed.	The FIS-B receiver is reporting that it has failed. The display of FIS-B products may be unavailable.	Check wiring to ADS-B In source. Check for internal faults in the ADS-B equipment. If problem persists, contact Garmin technical support for service.
DATALINK – GDL 69 is inoperative or connection to GTN is lost.	The GTN cannot communicate with the GDL 69.	Check for proper configuration.
		Ensure the GDL 69 is powered up.
		Verify that the GDL 69 Ethernet ports are enabled.
		HSDB data from the GDL 69 can be routed to the GTN through other Garmin LRUs. Ensure that all Garmin LRUs are powered up.
DATALINK – GDL 88 is inoperative or connection to GTN is lost.	The GTN cannot communicate with the GDL 88.	Check for proper configuration.
		Ensure the GDL 88 is powered up.
		HSDB data from the GDL 69 can be routed to the GTN through other Garmin LRUs. Ensure that all Garmin LRUs are powered up.
DATALINK - GDL 88 ADS-B failure. Unable to transmit ADS-B messages.	GDL 88 is not able to transmit an ADS-B message due to a failure with the GDL 88 system or antenna(s).	Check the ***GDL 88 Fault*** page in Configuration mode on the GTN.
		Refer to the GDL 88 STC Installation Manual.
DATALINK – GDL 88 ADS-B fault.	The GDL 88 has detected a fault with one of the GDL 88 UAT/1090 antennas.	Refer to the GDL 88 STC Installation Manual.
DATALINK – ADS-B fault: UAT receiver.	The GDL 88 has detected a UAT receiver fault.	Refer to the GDL 88 STC Installation Manual.
DATALINK – ADS-B fault: 1090 receiver.	The GDL 88 has detected a 1090 receiver fault.	Refer to the GDL 88 STC Installation Manual.
DATALINK - GDL 88 ADS-B is not transmitting position. Check GPS devices.	The GDL 88 has detected a position input fault.	Refer to the GDL 88 STC Installation Manual.
DATALINK - GDL 88 control panel input fault. Check transponder is in correct mode.	The GDL 88 has lost communication with the transponder.	Refer to the GDL 88 STC Installation Manual.
DATALINK - GDL 88 ADS-B fault. Pressure altitude input is invalid.	The GDL 88 has lost communication with the pressure altitude source.	Refer to the GDL 88 STC Installation Manual.

Alert Text	Possible Cause	Corrective Action
DATALINK - GDL 88 ADS-B traffic has failed.	GDL 88 may have lost GPS position. The GDL 88 has detected an internal failure.	Check the ***GDL 88 Fault*** page in Configuration mode on the GTN.
		Refer to the GDL 88 STC Installation Manual.
DATALINK - GDL 88 CSA Failure	The GDL 88 is reporting to the GTN that the CSA application has failed. Traffic alerting on ADS-B traffic is unavailable.	Ensure the aircraft has a clear view of the sky.
		If the problem persists, contact Garmin technical support.
DATALINK – GDL 88 external traffic system inoperative or connection lost.	The GDL 88 has detected a TAS/TCAS input fault.	Refer to the GDL 88 STC Installation Manual.
DATALINK - GDL 88 external traffic system has a low battery.	The GDL 88 is reporting that the external traffic system has a low battery.	Refer to the GDL 88 STC Installation Manual.
DATALINK – GDL 88 configuration module needs service.	The GDL 88 has detected a configuration module fault.	Refer to the GDL 88 STC Installation Manual.
DATALINK – GDL 88 needs service.	GDL 88 has detected an internal fault.	Check the ***GDL 88 Fault*** page in Configuration mode on the GTN.
		Refer to the GDL 88 STC Installation Manual.
DATALINK - GSR 56 is inoperative or connection to GTN is lost.	The GTN is not able to communicate with the GSR 56 Iridium transceiver.	Verify that the GTN is configured correctly for the GSR 56.
		Check the RS-232 wiring between the GTN and GSR 56.
		Check that the GSR 56 is receiving aircraft power and is connected to aircraft ground.
DATALINK – GSR 56 data services inoperative; registration required.	Registration settings have been altered or deleted.	In Normal mode, select ***System>External LRUs***. Select the **More Info** button next to the GSR 56 LRU. Select **Connext Registration** and re-enter the access code.
	Account has been deactivated.	Reactivate account.

5.3.1.8 Weather Radar Alerts

Table 5-10 Weather Radar Alert Troubleshooting Guide

Alert Text	Possible Cause	Corrective Action
WX RADAR FAIL – Weather radar is inoperative.	GTN ARINC 708 input port or ARINC 429 output not configured correctly.	Check ARINC 708 port setting for port 1. Raw ARINC 708 data can be viewed on the ***GTN DIAGNOSTICS - ARINC INPUTS*** page in Configuration mode.
		Verify that ARINC 429 Out 3 is configured for Radar Format 1.
	Improper setup on the weather radar.	Verify the configuration of the weather radar.
	Wiring connections are incorrect.	Check wiring.
	Weather radar is reporting a system fault.	Check weather radar status page on the GTN in Configuration mode.
		Refer to the weather radar installation manual.
WX RADAR SERVICE – Weather radar needs service. Return unit for repair.	Weather radar is reporting a system failure.	Refer to the weather radar installation manual for troubleshooting.

5.3.1.9 TAWS Related Alerts

Table 5-11 TAWS Alert Troubleshooting Guide

Alert Text	Possible Cause	Corrective Action
DATABASE- Terrain or Obstacle database not available.	The terrain or obstacle database is missing or corrupt.	Reload these databases on the external data card.
REMOTE KEY STUCK - TAWS inhibit key is stuck.	The **TAWS Inhibit** input is stuck in the enabled or pressed state.	Press the **TAWS Inhibit** key to cycle its operation.
		Go to the ***GTN DIAGNOSTICS - DISCRETE INPUTS*** page in Configuration mode and check that the state of the input changes when the **TAWS Inhibit** switch is pressed and released.
		Verify wiring to the switch.
		If the problem persists, contact Garmin technical support.
TAWS AUDIO INHIBITED - The TAWS Audio Inhibit discrete has been active for at least 30 seconds.	There is a wiring problem or a problem with the remote LRU that is connected to the GTN audio inhibit input.	Verify wiring to the **TAWS Audio Inhibit** input.
		Go to the ***GTN DIAGNOSTICS - DISCRETE INPUTS*** page in Configuration mode and check the state of the discrete input.
		If the problem persists, contact Garmin technical support.
CONFIGURATION – Terrain/ TAWS configuration is invalid. GTN needs service.	The TAWS configuration is invalid due to a loss or corrupted registry.	The TAWS/terrain configuration setting must be reselected. Reselect the TAWS or terrain selection and cycle power to the GTN.
		If the problem persists, contact Garmin technical support.

5.3.1.10 Third-Party Sensors Related Alerts

Table 5-12 Third-Party Sensor Alert Troubleshooting Guide

Alert Text	Possible Cause	Corrective Action
REMOTE KEY STUCK - Pilot/ Co-Pilot voice command push-to-command key is stuck.	The remote **push-to-command** switch has been in pressed position for at least 30 seconds. This input will now be ignored.	Press the **PTC** switch to cycle its operation. Verify wiring to the **PTC** switch. Check for a faulty **PTC** switch. If the problem persists, contact Garmin technical support.
STORMSCOPE - Stormscope is inoperative or connection to GTN is lost.	Stormscope is not powered up.	Ensure Stormscope is receiving power and is connected to ground.
	Wiring corrections are incorrect.	Check wiring.
	Stormscope is reporting a system failure.	Refer to Stormscope installation manual for troubleshooting.
STORMSCOPE - Invalid heading received from Stormscope.	The Stormscope is receiving invalid heading.	Refer to Stormscope installation manual for troubleshooting.
DATA SOURCE - Pressure altitude source inoperative or connection to GTN lost.	The GTN is configured to receive pressure altitude, but is not receiving it from any source.	If the GTN is not expected to receive pressure altitude, ensure that ALTITUDE SOURCE INPUT is configured for “Not Connected.”
		Check RS-232 port setting for the port that the device is connected to.
		Verify the configuration of the other device.
		Verify the GTN RX channel is connected to the remote device TX channel.
		Verify there is only one TX source per RX port.
		Check wiring.

Alert Text	Possible Cause	Corrective Action
DATA SOURCE - Heading source inoperative or connection to GTN lost.	The GTN is configured to receive heading, but is not receiving it from any source.	If the GTN is not expected to receive heading, ensure that Heading Source Input and Synchro Heading Input (GTN 7XX only) are configured for “Not Connected.”
		Check ARINC 429 or RS-232 port setting for the port connected to the heading source.
		Verify the configuration of the heading source.
		Check the RS-232, ARINC 429, or Synchro (GTN 7XX only) wiring between the GTN and the heading source.

5.4 Flight Stream Troubleshooting

Table 5-13 Flight Stream Troubleshooting

Problem	Possible Cause	Corrective Action
Unable to pair PED to Flight Stream 210/510.	Trying to pair with the device while not on the ***Bluetooth Pairing*** page.	Access the ***Connext Bluetooth Pairing*** page by pressing the **Home** key > **System** key > **Connext Setup** > **Flight Stream 210**. If Flight Stream 210 is the only Bluetooth device, touching **Connext Setup** will automatically open the ***Flight Stream 210*** page.
	Flight Stream paired device storage is full.	Refer to the list of paired devices and verify that the queue is not full. If 13 devices have been previously paired with the Flight Stream, remove a device from the list to pair the new device with the Flight Stream.
	Ensure that the Flight Stream has the latest certified software version.	Check software version and update if there is a newer approved version.
Flight Stream 210 is connected but ***Connext Setup*** page is grayed out.	Flight Stream 210 has lost communication with the GTN.	Check that the Flight Stream 210 connector is fully seated. Check RS-232 wires and connections between the GTN and Flight Stream 210. Check power and ground wires and connections to the Flight Stream 210.
PED is not receiving any data from Flight Stream 210/510.	Devices need to be re-synced with each other.	1. Access the ***Connext Bluetooth Pairing*** page by pressing the **Home** key > **System** key > **Connext Setup**. 2. Remove the PED from the list of paired devices on the GTN. 3. Remove the list of Bluetooth devices on the PED. 4. Re-pair the devices.
PED is not receiving data from the GDL 88 (e.g., ADS-B traffic and FIS-B).	Flight Stream 210 has lost communication with the GDL 88.	Check that PED is paired to Flight Stream 210. Refer to the steps above for details. Check that the Flight Stream 210 connector is fully seated. Check RS-422 wires and connections between the GDL 88 and Flight Stream 210. Check power and ground wires and connections to the Flight Stream 210. Check that the GDL 88 RS-422 port is configured for Connext Format 1.

Problem	Possible Cause	Corrective Action
PED is not receiving data from the GDL 69 (e.g., datalink weather).	Flight Stream 210 has lost communication with the GDL 69.	Check that PED is paired to Flight Stream 210. Refer to the previous steps for details. Check that the Flight Stream 210 connector is fully seated. Check RS-232 wires and connections between the GDL 69 and Flight Stream 210. Check power and ground wires and connections to the Flight Stream 210.
PED will not control GDL 69 Sirius XM audio.		

5.5 GMA 35 Troubleshooting

This section provides information to assist troubleshooting if problems occur after completing maintenance. Refer to the system configuration log retained in the aircraft permanent records for a list of interfaced equipment and system configuration data.

Table 5-14 GMA 35 Troubleshooting

Problem	Possible Cause	Corrective Action
Audio volume, audio routing, music, marker beacon status, or intercom are not working properly.	GMA 35 is not configured properly.	Check the configuration against the configuration log to ensure that the GMA 35 is configured properly.
Audio panel operates only in Failsafe mode (pilot headset connected to one COM radio, red “X” over the audio panel control field).	GMA 35 is disconnected from aircraft power or ground.	Ensure power is connected to P3502, pins 8 and 9, and ground is connected to P3502, pins 10 and 11. Check circuit breakers and avionics switch.
	GMA 35 is not seated correctly.	Verify that the GMA 35 is fully seated. Verify that counter-sunk flathead screws are used to secure the GMA 35 connectors to the backplate.
	RS-232 communication between the GTN 7XX and the GMA 35 is not functioning correctly.	Check for proper configuration of the GTN and GMA 35 RS-232 ports.
		Check for correct wiring between the audio panel and the GTN 7XX.
Bluetooth isn’t working.	SMA cable loose at antenna or on back of GMA 35c.	Ensure cable is tight at antenna and back of GMA 35c.
	Bluetooth disabled.	Enable Bluetooth under ***Connext Setup*** > ***GMA 35c***.
Unable to pair PED to GMA 35c.	Trying to pair with the device while not on the ***GMA 35c Pairing*** page.	Access the ***GMA 35c Pairing*** page by touching the **Home** key > **System** key > **Connext Setup** > **GMA 35c**. If GMA 35c is the only Bluetooth device, touching **Connext Setup** will automatically open ***GMA 35c*** page.

5.6 GMA 35 Failure Annunciations

Figure 5-2 depicts a typical failure indication of the GMA 35 audio panel.



Figure 5-2 GMA 35 Failure Annunciation

5.7 GMA 35 System Messages

Table 5-15 Remote Audio Panel Alert Troubleshooting Guide

Alert Text	Possible Cause	Corrective Action
AUDIO PANEL - Audio panel needs service.	Audio panel should be serviced.	Return audio panel to Garmin for service.
AUDIO PANEL - Audio panel is inoperative or connection to GTN is lost.	Audio panel is not powered up.	Ensure the audio panel is receiving power and connected to ground.
	Audio panel has failed.	Verify the wiring from the audio panel to the GTN.
	Wiring connections are incorrect.	

6 EQUIPMENT REMOVAL AND RE-INSTALLATION

6.1 GTN 6-2
6.1.1 Display of Self-Test Data 6-5
6.2 GMA 35 6-6
6.3 Data Card/Flight Stream 510 6-9
6.4 Flight Stream 210 6-10
6.5 NAV Antenna Cable Diplexer 6-11
6.6 NAV Antenna Cable Splitter 6-11
6.7 Configuration Module (P1001 Only) 6-12
6.8 GTN Fan 6-15
6.9 TVS and Fuse (Nonmetallic Aircraft Only) 6-18
6.9.1 Fuse 6-18
6.9.2 TVS 6-18
6.10 GPS/SBAS Antenna Cable Overbraid 6-22
6.11 WXR HSDB Cable Overbraid 6-24
6.12 Instrument Panel Bonding Strap 6-26
6.13 Flight Stream 210 Bonding Strap 6-27

This section describes how to remove and replace equipment associated with this STC. After removal and re-installation, LRUs must be configured and tested as described in Section 7.

CAUTION

When removing and/or replacing a GTN, GMA 35, or any other item under the scope of the STC installation, always ensure that the aircraft power is off. Unplug any auxiliary power supply.

6.1 GTN

Removal

1. Locate and open the GTN GPS/NAV and COM (GTN 635/650/750 only) circuit breakers.
2. Locate the unit retention mechanism access hole at the bottom-left corner of the unit face.
3. Insert a 3/32" hex tool into the access hole and turn the fastener counterclockwise until the unit is forced out about 3/8 inches and can be freely pulled from the rack.
4. Slide the GTN unit out of the rack.

Re-installation

NOTE

It may be necessary to insert the hex drive tool into the access hole and turn the cam mechanism 90° counterclockwise to ensure correct position prior to placing the unit in the rack.

CAUTION

Be sure not to overtighten the unit into the rack. The application of hex drive tool torque exceeding 15 in-lbf can damage the locking mechanism.

CAUTION

The Bluetooth antenna port on the GMA 35c has a tight clearance between the GMA and GTN. Ensure the GMA and antenna cable are fully seated before inserting the GTN. The face of the GMA 35c should be flush with the mounting rack when fully seated.

1. Ensure that the GTN GPS/NAV and COM circuit breakers are open.
2. Slide the GTN straight into the rack until it stops about 1 inch short of the fully seated position.
3. Insert a 3/32" hex drive into the unit retention mechanism access hole at the bottom of the unit face and turn the tool clockwise while pressing the bezel until the unit is firmly seated in the rack.
4. Once the GTN is re-installed, verify that the unit power-up self-test sequence is successfully completed and no failure messages or configuration error messages are annunciated. Section 6.1.1 outlines the power-up self-test sequence.

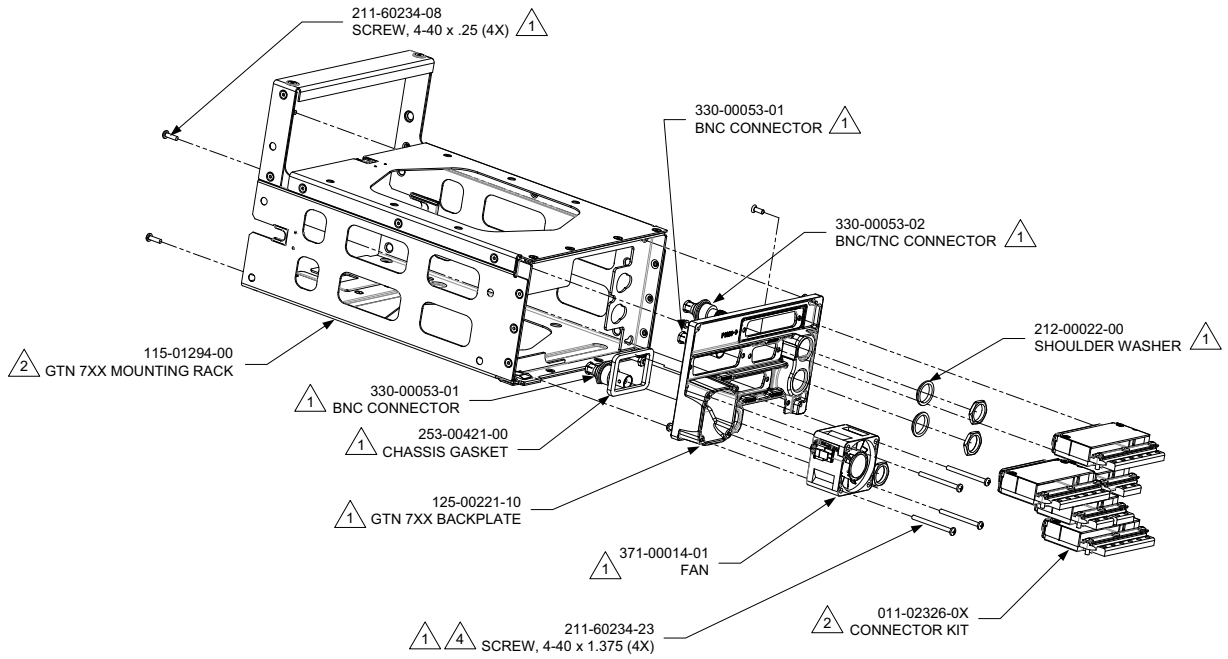

1 PART OF P/N 011-02246-00 (GTN 725, BLACK) AND P/N 011-02246-02 (GTN 750, BLACK AND GRAY) KITS. REFER TO THE TABLE FOR KIT CONTENT DIFFERENCES.

2 REFERENCE P/N 010-00819-50 (GTN 725, BLACK), P/N 010-00820-50 (GTN 750, BLACK), AND P/N 010-00890-50 (GTN 750, GRAY) KITS.

3 REFER TO TABLE FOR KIT REFERENCE INFORMATION.

4 TORQUE 4.5-5.2 IN-LBF.

				BACKPLATE KIT CONTENT DIFFERENCES			
UNIT DESCRIPTION	**INSTALLATION KIT**	**CONNECTOR KIT 2**	**BACKPLATE KIT 2**	**WASHER**	**QTY (EACH)**	**BNC CONNECTOR**	**QTY (EACH)**
GTN 725	010-00819-50	011-02326-00	011-02246-00	212-00022-00	1	330-00053-02	0
GTN 750 (BLACK)	010-00820-50	011-02326-02	011-02246-02		3		2
GTN 750 (GRAY)	010-00890-50	011-02326-02	011-02246-02		3		2

Figure 6-1 GTN 7XX Mounting Rack Assembly

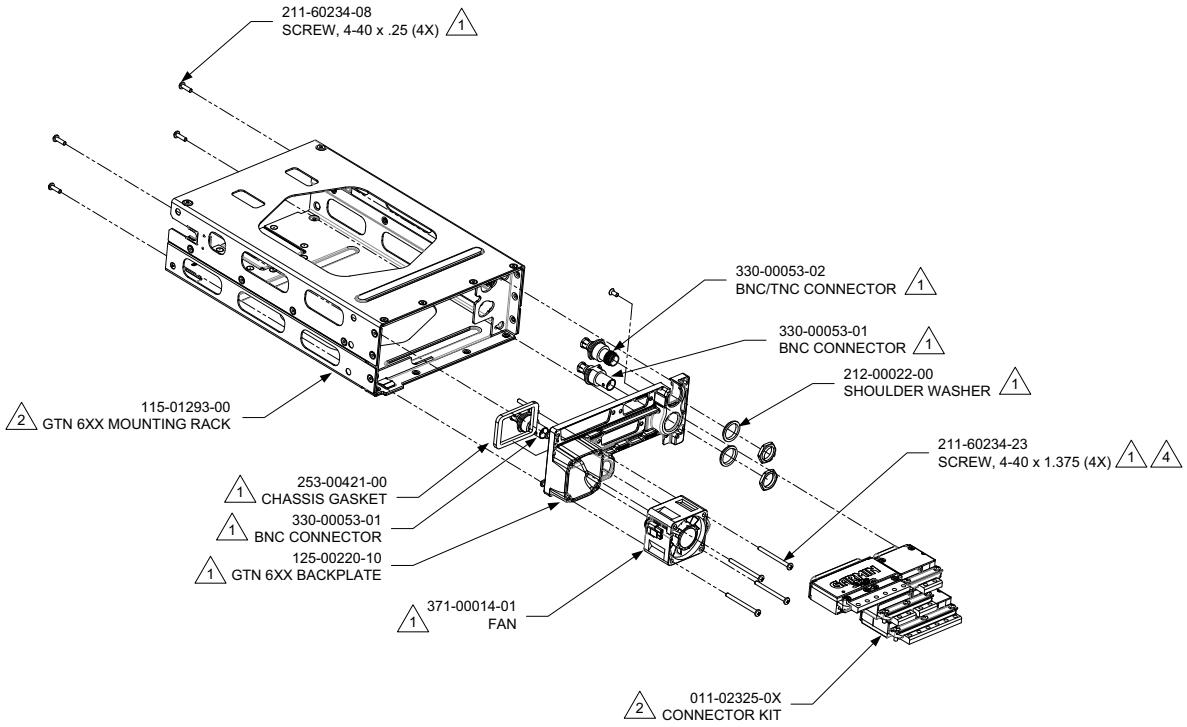

1 PART OF P/N 011-02245-00 (GTN 625, BLACK), P/N 011-02245-01 (GTN 635, BLACK), AND P/N 011-02245-02 (GTN 650, BLACK AND GRAY) KITS. REFER TO TABLE FOR KIT CONTENT DIFFERENCES.

2 REFERENCE P/N 010-00811-50 (GTN 625, BLACK), P/N 010-00812-50 (GTN 635, BLACK), P/N 010-00813-50 (GTN 650, BLACK), AND P/N 010-00889-50 (GTN 650, GRAY) KITS.

3 REFER TO TABLE FOR KIT REFERENCE INFORMATION.

4 TORQUE 4.5-5.2 IN-LBF.

				BACKPLATE KIT CONTENT DIFFERENCES			
UNIT DESCRIPTION	**INSTALLATION KIT**	**CONNECTOR KIT 2**	**BACKPLATE KIT 2**	**WASHER**	**QTY (EACH)**	**BNC CONNECTOR**	**QTY (EACH)**
GTN 625	010-00811-50	011-02325-00	011-02245-00	212-00022-00	1	330-00053-01	0
GTN 635	010-00812-50	011-02325-01	011-02245-01		2		1
GTN 650 (BLACK)	010-00813-50	011-02325-02	011-02245-02		3		2
GTN 650 (GRAY)	010-00889-50	011-02325-02	011-02245-02		3		2

Figure 6-2 GTN 6XX Mounting Rack Assembly

6.1.1 Display of Self-Test Data

Following normal power-up, the database pages are displayed, followed by the ***Instrument Panel Self-Test*** page. Touch **Continue** to display the ***Instrument Panel Self-Test*** page. During this time, the electrical outputs are activated and set to the values listed below. Touch **Continue** to acknowledge the ***Instrument Panel Self-Test*** page. This is not a required check, although this page can be useful for troubleshooting installation problems.

Table 6-1 Self-Test Values

Parameter	Self-Test Value
Course Deviation	Half-scale left deviation, TO indication, flag pulled
Glideslope/Vert. Deviation	Half-scale up deviation, flag pulled
Annunciators	All On
Selected Course (OBS)	The GTN displays the OBS value (149.5° if interfaced to an HSI with driven course pointer).
Desired Track	149.5° (Displayed as 150°)
Items below are not displayed on the ***Instrument Panel Self-Test*** page	
Distance to Go	10.0 nautical miles
Time to Go	4 minutes
Bearing to Waypoint (RMI)	135°
Active Waypoint	“GARMN”
Groundspeed	150 knots
Present Position	N 39°04.05’, W 94°53.86’
Waypoint Alert	Active
Phase of Flight	En Route
Message Alert	Active
Leg/OBS Mode	Leg Mode
GPS Integrity	Invalid
Roll Steering (if applicable)	Flight Director commands 0° bank (level flight) for 5 seconds; commands increasing right bank at 1°/second for 5 seconds; commands 5° right bank for 5 seconds; commands decreasing right bank at 1°/second for 5 seconds, until command is 0° bank again. This cycle repeats continuously.

6.2 GMA 35

Removal

1. Locate and open the audio panel circuit breaker.
2. Ensure that the GTN(s) are not receiving power prior to removal of the audio panel.
3. Remove the GTN 7XX.
4. **GMA 35c only:** Remove the Bluetooth antenna cable.
5. Locate the GMA 35 unit retention mechanism access hole at the bottom-center of the unit face.
6. Insert a 3/32" hex tool into the access hole and turn the fastener counterclockwise until the unit is forced out about 3/8 inches and can be freely pulled from the rack.
7. Slide the GMA 35 unit out of the rack.

Re-installation

NOTE

Be sure not to overtighten the unit into the rack. The application of hex drive tool torque exceeding 15 in-lbf can damage the locking mechanism.

1. Ensure that the audio panel circuit breaker is open and the GTN units are not receiving power.
2. Slide the GMA 35 straight into the rack until it stops.
3. Insert a 3/32" hex drive into the unit retention mechanism access hole at the bottom of the unit face and turn the tool clockwise while pressing on the face of the unit until the GMA 35 is firmly seated in the rack.
4. **GMA 35c only:** Re-install the Bluetooth antenna cable. Torque to 8-10 in-lbf using a 5/16 SMA torque wrench.
5. Ensure the face of the GMA is flush with the edge of the GMA installation rack when seated.
6. Re-install the GTN 7XX.
7. Verify that there are no failure messages or annunciations when the GTN and audio panel is powered on.

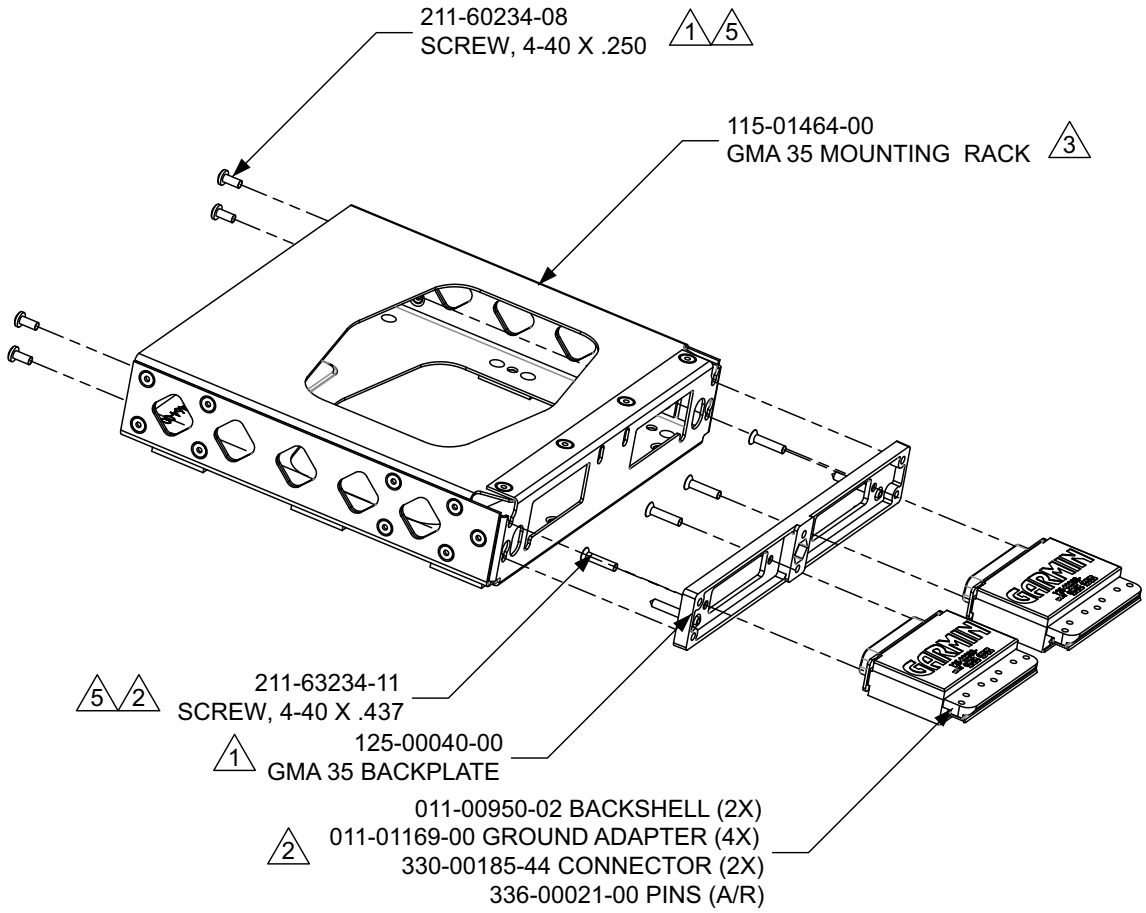

1 PART OF 011-02300-00 BACKPLATE KIT.

2 PART OF 011-02302-00 CONNECTOR KIT.

3 PART OF 010-00831-01 INSTALLATION KIT.

4 REFER TO TABLE FOR KIT REFERENCE INFORMATION.

5 TORQUE 4.5 – 5.2 IN-LBS.

Unit DESCRIPTION	INSTALLATION KIT	CONNECTOR KIT 3	BACKPLATE KIT 4
GMA 35	**010-00831-01**	**011-02302-00**	**011-02300-00**
GMA 35	**010-00831-21**	**011-02302-00**	**011-02300-00**
GMA 35c	**010-00831-41**	**011-02302-00**	**011-02300-00**

Figure 6-3 GMA 35 Mounting Rack Assembly Overview

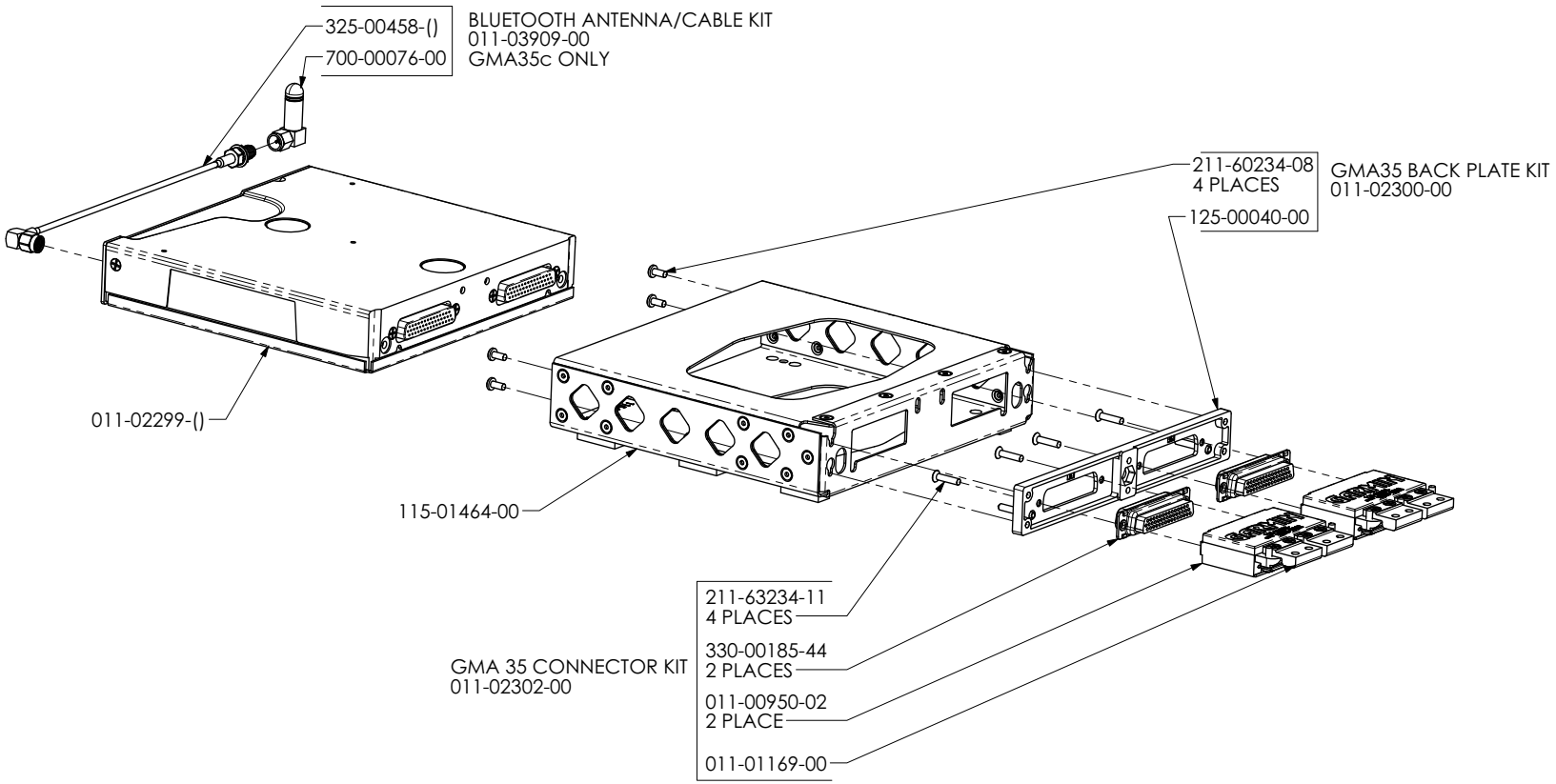

Figure 6-4 GMA 35c Mounting Rack Assembly Overview

6.3 Data Card/Flight Stream 510

CAUTION

Handle the data cards carefully. Do not touch the connector edge of the data card.

NOTE

A data card or Flight Stream 510 containing databases is required for full system functionality. One of the two must be installed.

Removal

1. Ensure that the GTN is turned off.
2. Remove the data card/Flight Stream 510 by pressing the card until it disengages and then pull the card to extract from the unit.

Re-installation

1. With the label facing right, insert the new data card/Flight Stream 510 into the data card slot on the front-left of the GTN by pushing the card straight into the slot.
2. Press until it is fully inserted and locked into position.

6.4 Flight Stream 210

Refer to Figure 6-5 when performing the following steps:

Removal

1. Locate and open the BT Link circuit breaker.
2. Unscrew the two jackscrews on the Flight Stream connector. Remove connector.
3. Locate the four #6 mounting screws for the unit and unscrew them; remove the Flight Stream device.

Re-installation

1. Ensure that the BT Link circuit breaker is open.

NOTE

Ensure that the Flight Stream is mounted with the arrow pointing in the direction of flight.

2. Re-install the Flight Stream device using the four previously removed #6 mounting screws. Tighten fasteners until snug and turn an additional one-quarter turn.
3. Attach the connector, tightening the two jackscrews.
4. Close the BT Link circuit breaker.

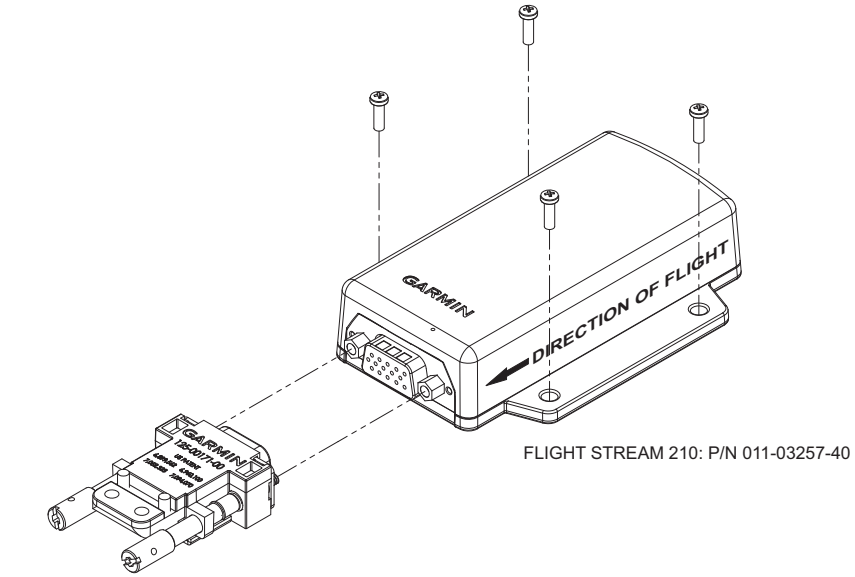

Figure 6-5 Flight Stream Assembly Overview (Bonding Strap Not Shown)

6.5 NAV Antenna Cable Diplexer

Removal

1. Disconnect the coaxial connectors from diplexer, taking note of which coaxial connectors are connected to each port on the diplexer.
2. Remove the mounting screws and diplexer.

Re-installation

1. Re-install the diplexer over the existing hole pattern and re-install fasteners. Torque fasteners within 22-25 in-lbf.
2. Diplexer fasteners are standard steel fasteners with 0.1900-32UNF-2A thread. Refer to aircraft parts catalog or standard practices manual for recommendations.
3. Reconnect the coaxial connectors to the diplexer.

6.6 NAV Antenna Cable Splitter

Removal

1. Disconnect the coaxial connectors from the splitter, taking note of which coaxial connectors are connected to each port on the splitter.
2. Remove the mounting screws and splitter.

Re-installation

1. Re-install the splitter over the existing hole pattern and re-install fasteners. Torque fasteners within 5-6 in-lbf. Splitter fasteners are standard steel fasteners with 0.1380-40UNF-2A thread. Refer to aircraft parts catalog or standard practices manual for recommendations.
2. Reconnect the coaxial connectors to the splitter.

6.7 Configuration Module (P1001 Only)

GTN P1001 connector assemblies serve as the housing for a configuration module. This section lists configuration module assemblies.

Table 6-2 Configuration Module Wire Color Reference Chart

Color	Function	P1001 Contact
Red	Vcc	65
Black	Ground	64
Yellow	Data	62
White	Clock	63

NOTE

The pin contacts supplied with the GTN configuration module are specifically made to accommodate 28 AWG wire. The crimp tool should have the indenter set to the correct setting when crimping these contacts to the configuration module harness.

Configuration modules are located within the GTN harness connector backshell (item 6, Figure 6-6). There are two configuration module kits that have been approved for use with the GTNs. The P/N 011-00979-00 configuration module kit has a spacer (Figure 6-7). The P/N 011-00979-03 configuration module kit does not use a spacer (Figure 6-6). The P/N 011-00979-03 configuration module kit is recommended for all replacements. The instructions for removal/replacement of a configuration module apply equally to either part number. Unless otherwise noted, refer to the corresponding backshell assembly drawing when performing the following removal and re-installation steps.

Table 6-3 Configuration Module Kit P/N 011-00979-03 (P1001)

Figure 6-6 Reference	Description	Garmin P/N
1	Configuration Module, PCB Board Assembly w/EEPROM	011-02178-00
3	4-Conductor Harness	325-00122-00
4	Pin Contact, Crimp, #22D	336-00021-00

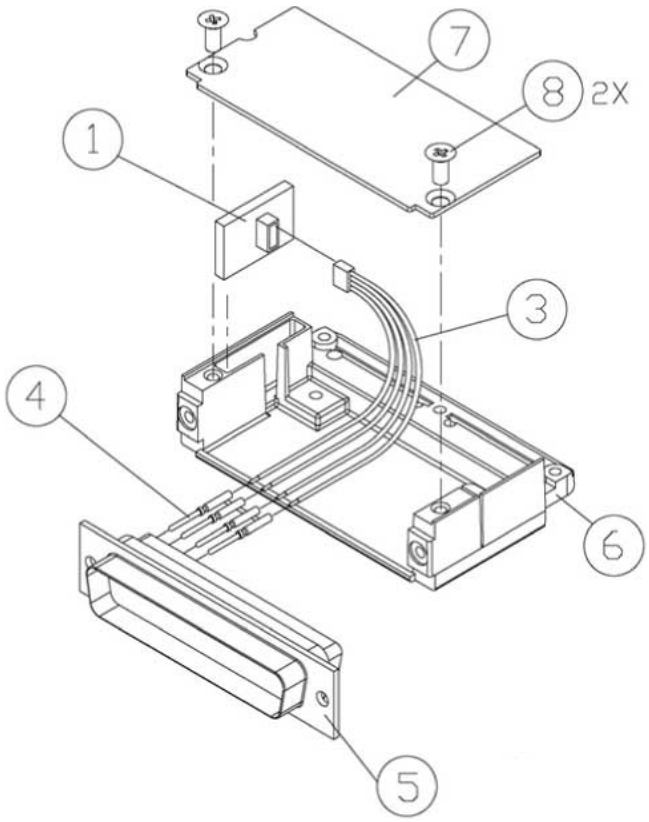

Figure 6-6 Backshell Assembly (Potted Configuration Module)

Removal

1. Disconnect the connector (**5**) from the GTN backplate assembly.
2. Remove two screws (**8**) from cover (**7**) and remove cover. Refer to Figure 6-6 for this step.
3. Unplug the connector from the configuration module (**1**).
4. Remove the configuration module from the backshell (**6**).

Re-installation

1. Inspect the connector for damaged pins (**4**) or wires (**3**).
2. Place the configuration module (**1**) in position.
3. Insert connector into the configuration module (**1**).
4. Place the cover (**7**) back on the connector and re-install screws (**8**). Refer to Figure 6-6 for this step.

Table 6-4 Configuration Module Kit P/N 011-00979-00 (P1001)

Figure 6-7 Reference	Description	Garmin P/N
1	Configuration Module, PCB Board Assembly w/EEPROM	012-00605-00
2	Spacer, Configuration Module	213-00043-00
3	4-Conductor Harness	325-00122-00
4	Pin Contact, Crimp, #22D	336-00021-00

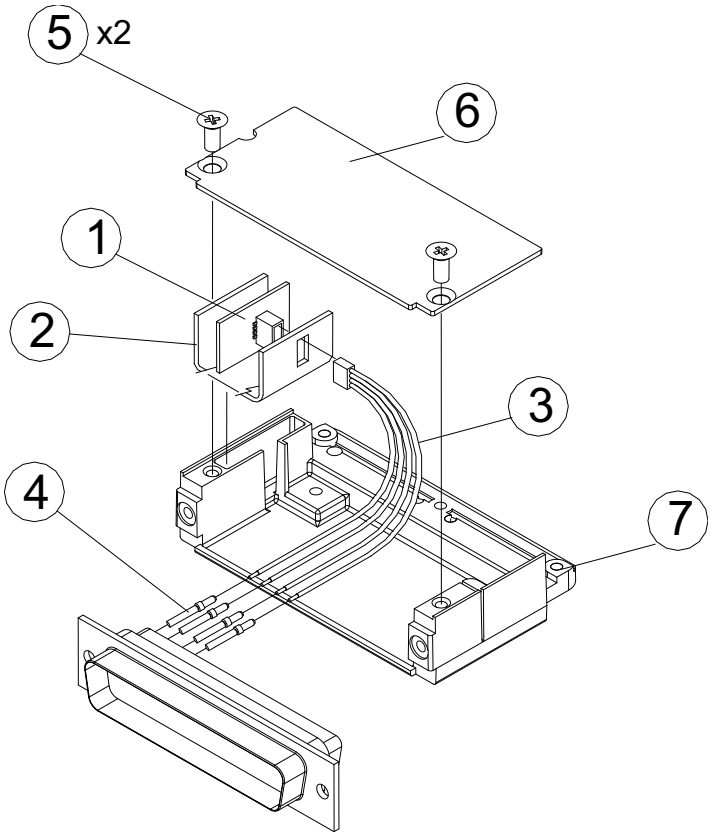

Figure 6-7 Backshell Assembly (Configuration Module with Spacer)

Removal

1. Disconnect the connector from the GTN backplate assembly.
2. Remove two screws (**5**) from cover (**6**) and remove cover.
3. Unplug the connector from the configuration module (**1**).
4. Remove the configuration module from the backshell (**7**).

Re-installation

1. Inspect the connector for damaged pins (**4**) or wires (**3**).
2. Apply spacer (**2**) by wrapping it around the PCB board (**1**) making sure to insert the plastic connector mounted on the board into the hole provided in the spacer.
3. Place the configuration module (**1**) in position.
4. Insert connector into the configuration module (**1**).
5. Place the cover (**6**) back on the connector and re-install screws (**5**).

6.8 GTN Fan

CAUTION

To avoid damage to the GTN, take precautions to prevent Electro-Static Discharge (ESD) when handling the GTN, connectors, fan, and associated wiring. ESD damage can be prevented by touching an object that is of the same electrical potential as the GTN before handling the GTN itself.

The GTN cooling fan assembly is located behind the unit rack. Fan removal and replacement details for specific installations fall outside the scope of this manual.

Removal

1. Remove power from aircraft.
2. Remove the GTN unit from the rack. Refer to Section 6.1.
3. Loosen the four 4-40 x 0.25" panhead screws at each corner of the inside rear wall of the rack.
4. While depressing the metal spring at the lower-left corner of the rack's rear face, slide the connector backplate to the left. The connector backplate is now free of the rack.
5. Disconnect the fan power connector. Be careful to avoid damaging the fan wires.
6. Remove the four 4-40 x 1.375" panhead screws attaching the fan to the backplate.

Re-installation

1. Position the fan on the backplate with the fan connector pigtail oriented along the left edge of the backplate, as shown in Figure 6-8.
2. Re-install screws.
3. Connect fan power connector.

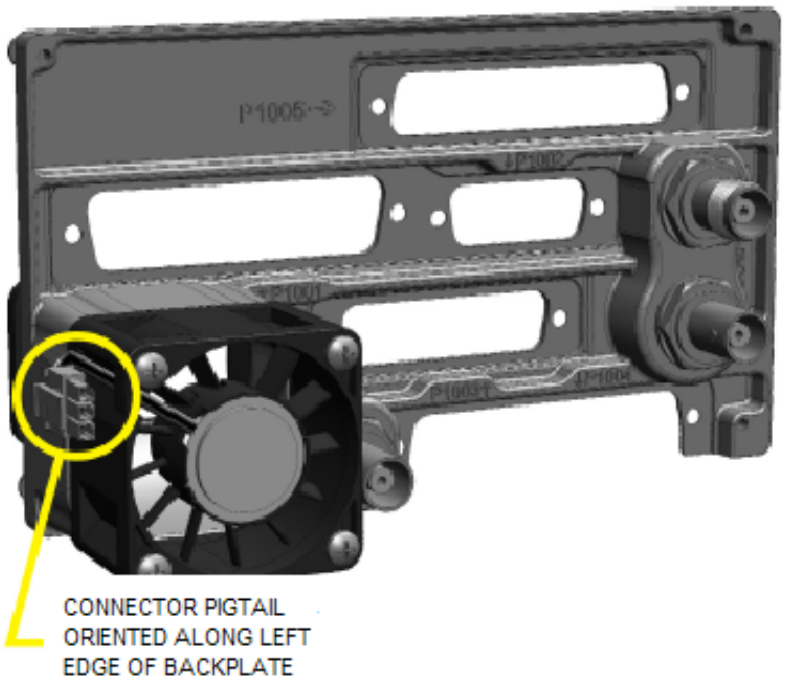

Figure 6-8 Fan/Backplate Orientation (GTN 7XX)

Table 6-5 lists part numbers for the fan kit that are used with P1001 only.

Table 6-5 Fan Kit

Figure 6-9 Ref	Description	Garmin P/N
1	Fan Cable Assembly, 3-Conductor Harness	320-00600-00
2	Pin Contact, Crimp, #22D	336-00021-00
3	Silicone Fusion Tape	249-00114-00

Table 6-6 Fan Cable Wire Color Reference Chart

Color	Function	P1001 Contact
Red	Power	59
Black	Ground	43
Yellow	Fan tach	58

Fan Wiring Harness Replacement

1. Strip 0.17 inches of insulation from each wire prior to crimping. Crimp socket contacts onto each wire of the 3-conductor wire harness. Insert newly crimped socket contacts and wires into the appropriate connector housing location, as shown in Figure 6-9.
2. Plug the 3-conductor wire harness connector into the connector on the fan.

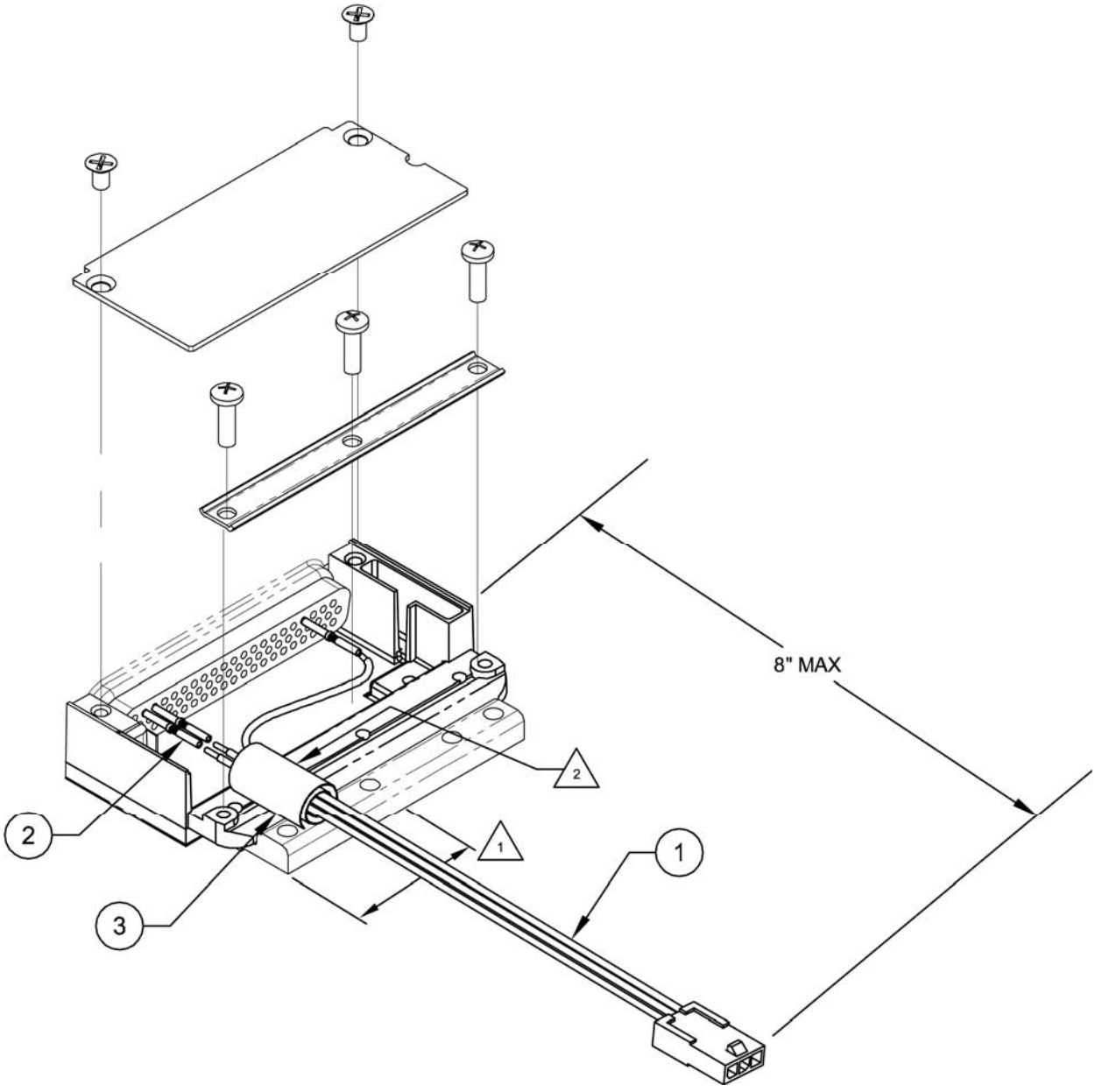

1. Do not use 3 tapped holes on shield block above the fan. There is insufficient clearance between the fan casing and terminal lugs.
2. Wrap fan wires with fusion tape separately from the main harness to prevent the fan wires from being dislodged or damaged if there is movement between the main harness and the fan harness.
3. Ensure the fan wires do not exceed a length of 8 inches.

Figure 6-9 Fan Wiring Replacement

6.9 TVS and Fuse (Nonmetallic Aircraft Only)

This section applies to IFR nonmetallic aircraft only. VFR nonmetallic aircraft do not require the use of TVSs or fuses.

Certain nonmetallic aircraft will require TVSs at the main power input of the GTN.

The following materials are used to construct TVS1 and TVS2:

Transient Voltage Suppression Materials

- Transient voltage suppressor 30KPA48A (TVS1 and/or TVS2)
- Transient voltage suppressor 15KPA48A (TVS1 only)
- Fuse, 3AG, fast-acting, 4A Littelfuse, P/N 0312004 (TVS1 assembly)
- Fuse, 10A Littelfuse, P/N 0312010 (TVS2 assembly)
- Fuse holder, inline, Cooper Bussman, P/N HFB (TVS1 and TVS2)
- Connector, 4-pin plug (socket housing) and cap (pin housing) (TVS2)
- Tyco electronics P/Ns 1-480424-0 and 1-480426-0 (TVS2)
- Sockets, qty. 4, Tyco Electronics, P/N 60617-1 or 60619-1 (TVS2)
- Pins, qty. 4, Tyco Electronics, P/N 60618-1 or 60620-1 (TVS2)
- Electrical tie-down strap, MS3367-1-X

6.9.1 Fuse

Removal

1. Open the fuse holder and remove the fuse.

Re-installation or Replacement

1. If the fuse continuity checks good, re-install fuse and close the fuse holder. If the fuse is open, replace the fuse and close the fuse holder.

The fuse for TVS1 is a 3AG fast-acting, 4A Littelfuse (P/N 0312004). The fuse for TVS2 is a 10A Littelfuse (P/N 0312010).

6.9.2 TVS

The 15KPA48A or the 30KPA48A can be used for TVS1, but only the 30KPA48A can be used for TVS2.

TVS1 Removal

1. Remove the shield block grounding screw and remove the ring terminal from the backshell of the connector, as shown in Figure 6-10.
2. Open the fuse holder and remove the fuse.
3. Carefully remove heat shrink from the TVS ensuring not to cut the insulation on the wire under the heat shrink.
4. On the fuse end of the TVS, use a soldering iron to heat the solder joint to remove the TVS.

TVS1 Replacement

CAUTION

Be aware of the orientation of the TVS during replacement. Refer to Figure 6-10 for proper alignment of the TVS.

1. Solder new TVS onto the exposed wire from the fuse holder.
2. Solder a small piece of wire to the opposite end of the TVS. The total wire length to the environmental splice is not to exceed 6 inches.
3. Install heat shrink over the exposed TVS and solder joints.
4. Attach the ring terminal to the new lead, as shown in Figure 6-10.
5. Place the fuse back into the fuse holder and close the holder.
6. Re-attach the ring terminal to the backshell of the connector.

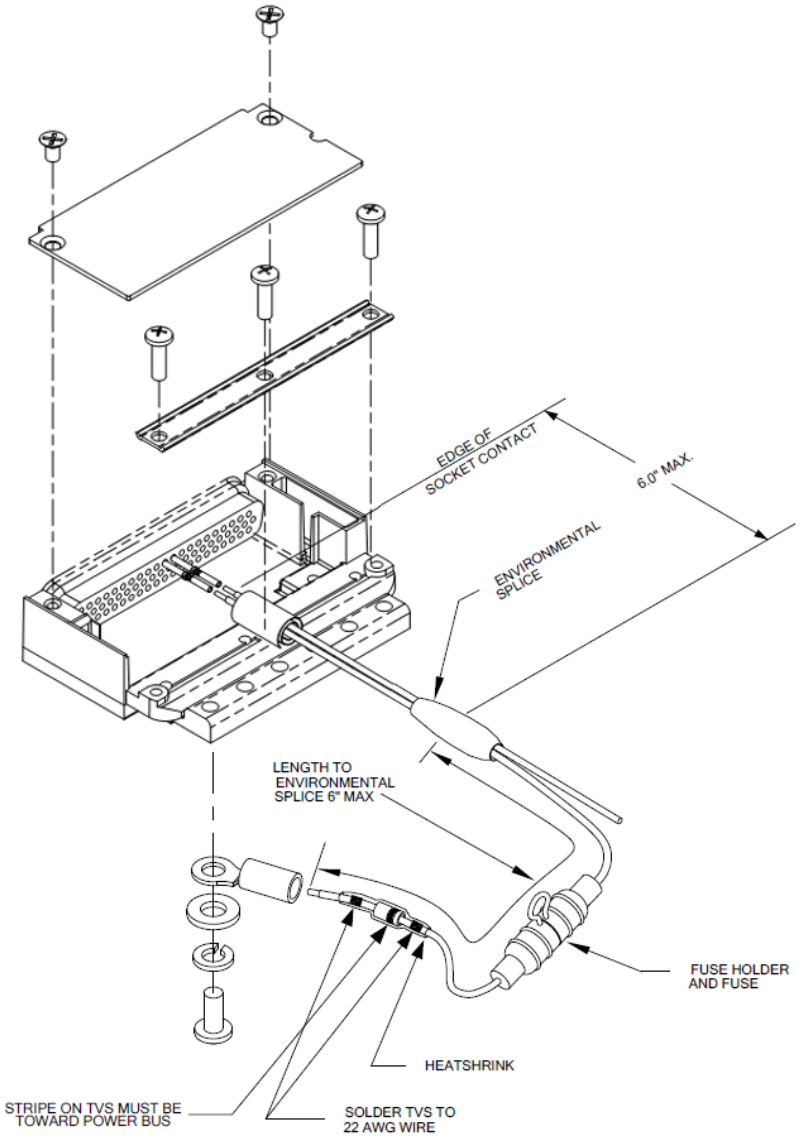

Figure 6-10 TVS/Fuse Replacement (TVS1/F1)

TVS2 Removal

1. Remove the ring terminal from ground, as shown in Figure 6-12.
2. Carefully remove heat shrink from the TVS assembly, ensuring not to cut the insulation on the wire under the heat shrink.
3. If replacing the entire TVS assembly, unplug the 4-pin connector and proceed to step 1 of the replacement. If it is not necessary to replace all of the TVSs, carefully unpin the failed TVS(s).
4. Apply heat with a soldering iron to the opposite end of the TVS assembly so that the bad TVS(s) can be removed. Use caution when applying heat to the solder joint to ensure that the remaining TVSs aren't damaged.

TVS2 Replacement

1. When installing new TVSs, cut the leads to 0.75 +0.00/-0.10 inches on both sides.
2. Crimp and solder each of the TVS banded side (cathode) leads to their specific sockets. Refer to Figure 6-11.
3. Insert sockets into the 4-pin connector.
4. Install heat shrink around the four TVSs – this will help to hold them in place during the following steps.
5. Solder the un-banded end of the TVS assembly together, as shown in Figure 6-12, onto a length of 18 AWG wire. Attach a terminal lug onto the wire end.
6. Carefully remove heat shrink installed in step 3 from the TVS, ensuring not to cut the insulation on the wire under the heat shrink.
7. Attach an appropriately sized section of heat shrink to cover the soldered TVS leads and four TVS pieces. A second appropriately sized (larger) section of heat shrink should then be attached to shrink over the 4-pin connector with sockets and back over the four TVSs. These two pieces of heat shrink should overlap along the entire length of the TVSs.
8. Mate the 4-pin connector together.
9. Reconnect the power end of the assembly to the power bus.
10. Reconnect the ground end of the assembly to ground.
11. Perform a polarity check per Section 6.9.2.1.

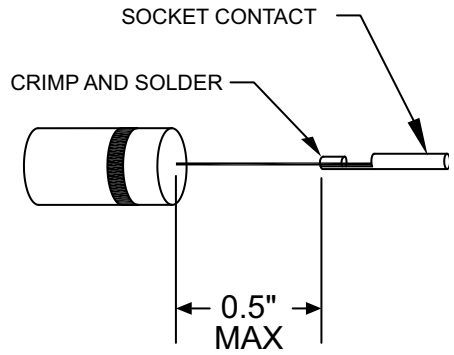

Figure 6-11 Detail of TVS Pin Assembly

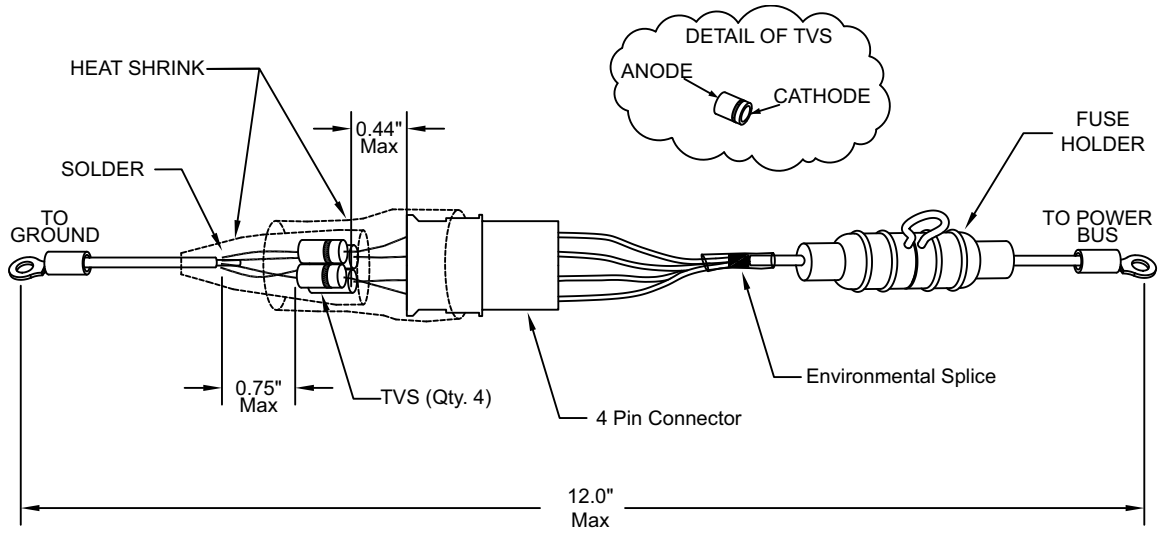

NOTE:
All four TVSs must be installed with the cathode facing the connector.

Figure 6-12 TVS2 Assembly

6.9.2.1 TVS2 Assembly Polarity Check

Using a multimeter that is set to the diode mode, check conductivity across the entire TVS2 assembly. In one direction, the meter should read open, and in the other direction, it should read 2.0 to 2.5 volts. When installed in the aircraft, the TVS assembly should be oriented so that it does not normally conduct from power to ground. The meter should indicate open when the red lead is attached to the power bus terminal lug and the black lead is attached to the ground terminal lug. The meter should indicate 2.0 to 2.5 volts when the red lead is attached to the ground terminal lug and the black lead is attached to the power bus terminal lug.

6.10 GPS/SBAS Antenna Cable Overbraid

The following removal and replacement steps are provided as guidance for replacing the cable overbraid assembly. Refer to Figure 6-13.

Removal

1. Gain access to the GPS/SBAS antenna cable.
2. Disconnect the overbraid terminal lug from the shield block.
3. Disconnect the GPS coaxial cable connector at the GTN backplate.
4. Gain access to the GPS antenna and disconnect the antenna end of the coaxial cable.
5. Refer to the wire routing diagram and remove the entire cable assembly from the aircraft.
6. Remove the two visible electrical tie down connectors.
7. Unfold the overbraid that is doubled over and remove the remaining tie down connector.
8. Remove the antenna cable from the overbraid and visually inspect the cable insulation for damage.

Replacement

NOTE

The length of overbraid required for replacement of the assembly will be the length of the GPS/SBAS antenna cable plus 6 inches. Refer to Figure 6-13 before beginning the re-installation steps below.

1. If the antenna cable insulation shows signs of damage, replace the cable.
2. Test the GPS coaxial cable for continuity. Replace the cable if it fails the continuity test.
3. Slide the new overbraid over the entire length of the GPS/SBAS antenna cable.
4. Roll back approximately 1.5 inches of the overbraid end at the antenna end.
5. Leaving the rolled-back portion free, secure the antenna end of the overbraid around the GPS/SBAS antenna connector with an electrical tie-down strap.
6. Fold the free overbraid ends back over the tie-down strap and secure them to the cable with two additional tie-down straps.
7. Re-install the cable in the aircraft and connect the cable to the GPS antenna.
8. At the GTN end of the overbraid, comb out a maximum of 2 inches of braid, twist it, cut to length if necessary, and terminate with a #10 terminal lug.
9. Connect the remaining end of the antenna cable to the GTN and terminal lug to the P1001 shield block ground.

NOTES:

1. THE OVERBRAID MUST BE INSERTED INTO THE GROUNDING LUG BY COMBING OUT AND TWISTING THE WIRE STRANDS AND BEFORE TERMINATING THEM IN A TERMINAL LUG.

2. WHEN REINSTALLING OVERBRAID AT CONNECTOR END OF PIGTAIL, THE OVERBRAID IS PUSHED DOWN UNTIL IT TOUCHES THE TOP SURFACE OF THE CONNECTOR. CONTINUE PUSHING BRAID DOWN BY SPREADING IT OUT ALONG THE TOP SURFACE OF THE CONNECTOR. APPLY THE FIRST CABLE TIE AROUND THE BRAID AND ANTENNA CABLE WHERE IT ENTERS THE CONNECTOR. THEN LIFT THE SPREAD PORTION OF THE BRAID UP TO COVER THE FIRST CABLE TIE, DOUBLING BACK ON ITSELF. INSTALL THE REMAINING TWO CABLE TIES ABOVE THE BULGE CREATED BY THE FIRST CABLE TIE WHICH IS NOW COVERED BY THE BRAID.

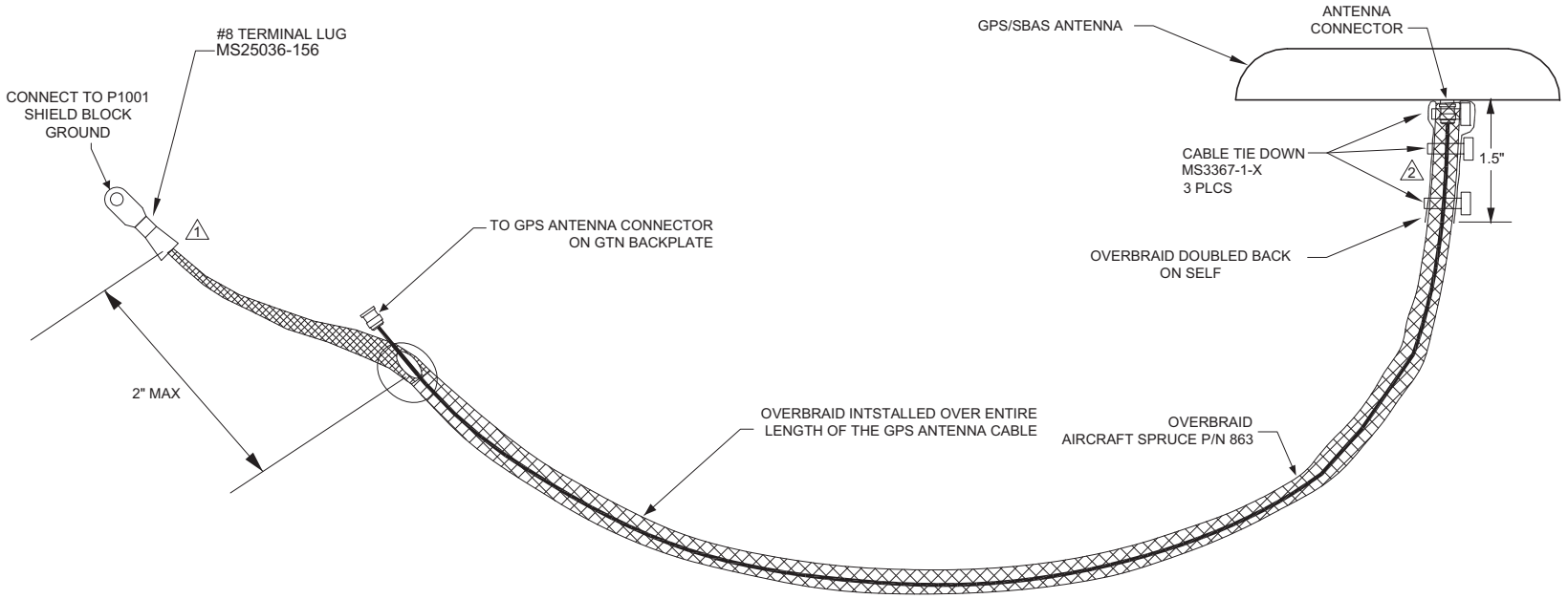

Figure 6-13 GPS/SBAS Antenna Cable Overbraid

6.11 WXR HSDB Cable Overbraid

The following removal and replacement steps are provided as guidance for replacing the cable overbraid assembly. The overbraid assembly drawing is shown in Figure 6-14.

Removal

1. Remove the radome to gain access to the GWX radar.
2. Disconnect the cable connector at the weather radar.
3. At the other end of the overbraid, disconnect the terminal ground lug from the bulkhead.
4. Remove the electrical tie-down strap.
5. Remove the backshell from the GWX weather radar connector.
6. Unpin the necessary cables from the GWX connector and pull the overbraid off of the wire.

Replacement

NOTE

The length of overbraid required is approximately equal to the length of the WXR cabling in the radome area (measured from the bulkhead to the WXR R/T connector) plus 6 inches.

1. If any cable insulation shows signs of damage, replace the cable(s).
2. Slide the new overbraid over the HSDB cabling from the WXR R/T to the bulkhead.
3. At the bulkhead end of the overbraid, comb out a maximum of 2 inches of braid, twist it, cut to length if necessary, and terminate with a MS20659-131 5/16" terminal lug.
4. With a NASM970-5 (AN970-5) 0.063” thick washer between the terminal lug and bulkhead, secure the terminal lug to the existing bulkhead location.
5. At the WXR R/T end of the overbraid, fold 1 inch of overbraid back over itself. Position the overbraid so that the fold will lie under the backshell cover plate, while the overbraid ends will lie just outside the strain relief bar.
6. Re-pin the cables to the WXR connector and re-install the backshell cover plate and strain relief bar.
7. Verify overbraid terminal bonding by checking the resistance between the overbraid and the bulkhead. The resistance should be less than 2.5 mΩ.

CAUTION

All overbraid ends must be secured outside the backshell by the strain relief bar. Refer to Figure 6-14. Failure to do so may allow the overbraid ends to contact and short HSDB pins, resulting in weather radar malfunction or damage.

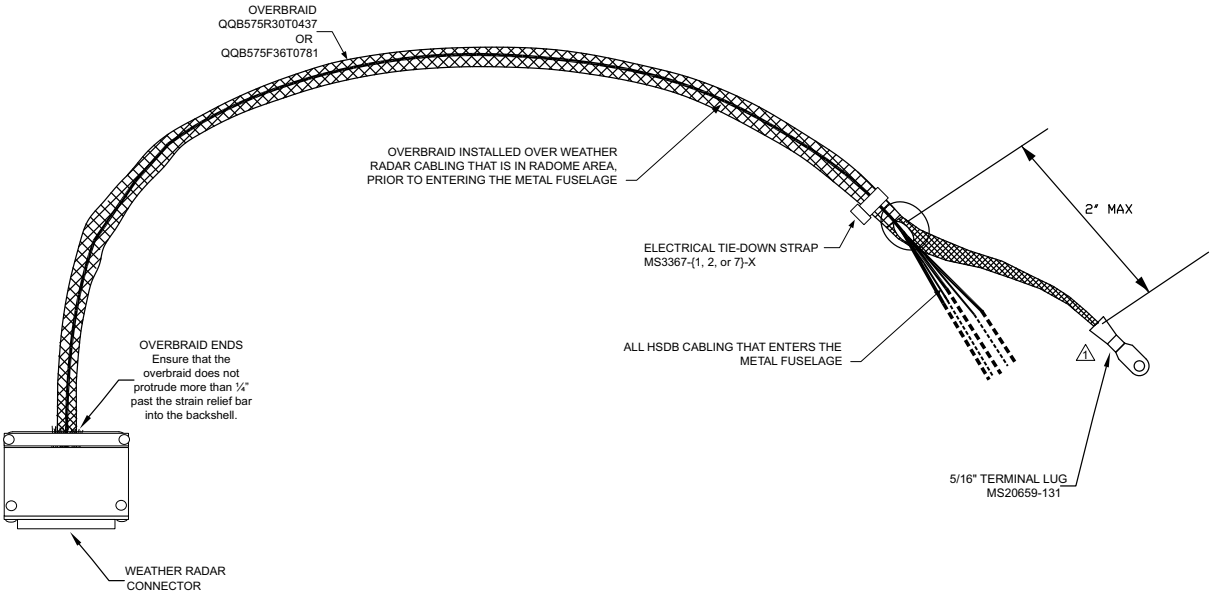

NOTES:

⚠1 THE OVERBRAID MUST BE INSERTED INTO THE GROUNDING LUG BY "COMBING" IT OUT INTO A FLAT CONFIGURATION AND THEN COMPRESS INTO A SMALL DIAMETER BUNDLE NEAR ITS END WHICH MAY BE INSERTED INTO THE GROUNDING LUG.

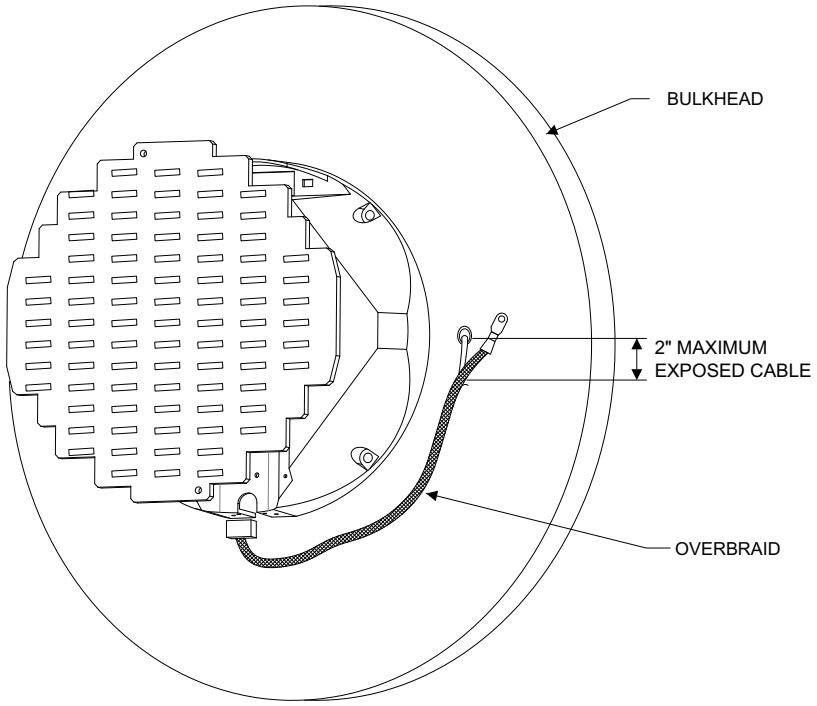

Figure 6-14 WXR HSDB Cable Overbraid Details

6.12 Instrument Panel Bonding Strap

The following steps are provided as guidance for replacing a damaged instrument panel bonding strap. Reference the bonding strap hardware stack up in Figure 6-15.

Removal

The bonding strap is attached in two locations. The terminal lug is secured with a lock nut. To remove the strap, access both sides of the instrument panel and the nearby structure and unbolt the hardware.

Replacement

NOTE

The instrument panel bonding strap should be as short as practical and must not exceed 6 inches in length.

1. Construct a bonding strap by attaching 5/16" inside diameter insulated terminal lugs (MS20659-131) to both ends of the braid (3/4" tinned copper flat braid (QQB575F36T781) may be used).
2. If needed, clean the attachment locations with a bonding brush.
3. Secure each end of the bonding strap to the previously installed locations. Ensure that the strap does not loop back on itself and that the hardware is as shown in Figure 6-15. The washers must seat fully against the aircraft metallic structure, without overhang or interference from other hardware.
4. Using a milliohm meter, verify that the resistance between the connected structure is less than 2.5 mΩ.

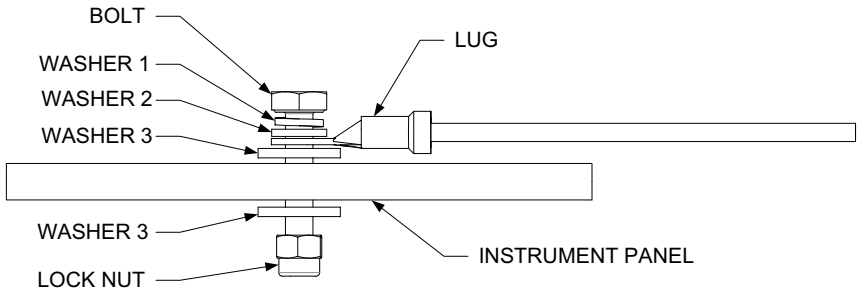

Figure 6-15 Instrument Panel Bonding

Table 6-7 Instrument Panel Bonding Hardware

Hardware	P/N
Bolt	AN5-XA
Washer 1 (5/16" lock washer)	NASM35338-45
Washer 2 (5/16" flat washer)	NAS1149F0532P
Washer 3 (0.063" thick flat washer)	NASM970-5 or AN970-5
Locknut (5/16")	MS21042, MS20364, MS21045, or MS20365

6.13 Flight Stream 210 Bonding Strap

The following removal and replacement steps are provided as guidance for replacing the Flight Stream bonding strap. The bonding strap assembly drawing is shown in Figure 6-16.

NOTE

The aircraft structure side of the bonding strap may be mounted using a nut in lieu of a nut plate. If a nut was used in lieu of a nut plate, further disassembly of the aircraft may be required to gain access to the nut.

Removal

1. Disconnect one end of the bonding strap from the aircraft ground location.
2. Disconnect the other end of the bonding strap from the shield block on the Flight Stream connector backshell.
3. Remove the bonding strap.

Replacement

NOTE

The Flight Stream bonding strap should be as short as practical and must not exceed 20 inches. When installed, the bonding strap must not loop back on itself.

1. Construct a bonding strap no longer than 20 inches by attaching 10AWG terminal lugs to both ends of 1/4" braid (QQB575R36T0250) or wider.
2. If needed, clean the attachment locations with a bonding brush.
3. Secure each end of the bonding strap to the previously installed locations. Ensure that the strap does not loop back on itself and that the hardware is as shown in Figure 6-16. The washers must seat fully against the aircraft metallic structure without overhang or interference from other hardware.
4. Using a milliohm meter, verify that the bonding resistance is less than or equal to 10 mΩ.

In the event of a bonding test failure, remove the bonding strap from the aircraft ground point and clean the attachment point with a bonding brush. Re-install the bonding strap and perform the electrical bonding test in accordance with Section 4.5 again.

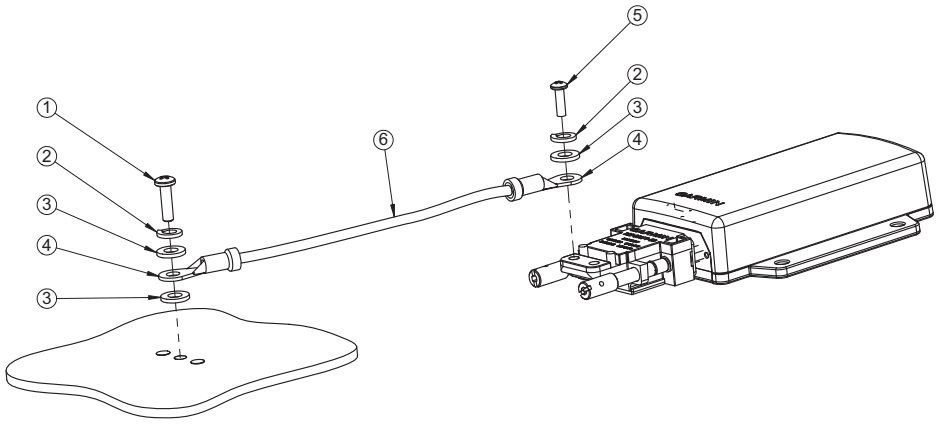

Figure 6-16 Flight Stream Bonding

Table 6-8 Flight Stream Bonding Hardware

Refer to Figure 6-16	Hardware	P/N
1	Screw	AN515, AN515B, or AN515C
2	Lock washer	MS35338-137
3	Flat washer	NAS1149CN832R or AN960C-8
4	Terminal Lugs (7 AWG or 10 AWG depending on size of braid)	MS25036
5	Screw	MS51957-42
6	Braid	QQB575R36T0250

7 EQUIPMENT CONFIGURATION AND TESTING

7.1 GTN 6XX/7XX....7-2
7.1.1 GTN Configuration Steps....7-4
7.1.2 GTN Ground Checks....7-4
7.2 GMA 35....7-8
7.2.1 GMA 35 Audio Panel Configuration (GTN 7XX Only)....7-8
7.2.2 GMA 35 Audio Panel Checkout (GTN 7XX Only)....7-9
7.3 Configuration Module....7-13
7.4 Interfaced Equipment....7-13
7.4.1 Navigation Indicator....7-13
7.4.2 Serial Tuned DME....7-16
7.4.3 Displays....7-16
7.4.4 Transponder....7-20
7.4.5 Traffic or Weather System....7-21
7.4.6 Weather Radar....7-23
7.4.7 GDL 88....7-24
7.4.8 Fan Interface Check....7-24
7.4.9 Flight Stream 210/510 Interface Checks....7-24
7.5 Enabled Features....7-26
7.5.1 Terrain Configuration and Checks (For Units with Terrain Alerting/TAWS Only)....7-26

This section provides procedures to be followed after an LRU is replaced. At the beginning of each LRU section, instructions are given to guide the technician for various removal and replacement scenarios. These instructions define necessary procedures to be followed for situations in which original equipment was re-installed, as well as for situations in which new equipment (i.e., new serial number) is installed.

7.1 GTN 6XX/7XX

Original GTN 6XX/7XX Re-installed

If the removed GTN is installed in its original position, no software loading or configuration setting changes are required. This does not include units that were returned for repair, as their software and configuration files are deleted during the repair testing progress. It is recommended to perform the Connector Engagement Check to ensure that the GTN is properly seated to the connectors. Refer to Section 7.1.2.1.

New, Repaired, or Exchanged GTN Installed

If a new, repaired, or exchanged GTN is installed, the correct software must be loaded to the unit. Some configuration files must be set. Refer to the summary in Table 7.1. Any enabled features, such as TAWS B or ChartView, will not need to be re-enabled if the configuration module was left in the aircraft.

This section covers the necessary steps to configure and test a replacement GTN unit. The steps provided in this section are only applicable for replacement of an equivalent GTN unit (e.g., 750 for 750, 625 for 625, etc.). If wiring updates are needed, or the configuration module is being replaced simultaneously, refer to *GTN 6XX/7XX Part 23 AML STC Installation Manual* for installation instructions.

Table 7-1 Configuration and Checkout Procedures

Modification	Required Action	Affected Models
Replacing GTN with equivalent unit	New units or units returned from the factory will include a different COM squelch calibration procedure. If the unit replaced was configured prior to July 2014, it is likely that the COM squelch settings should be re-evaluated prior to returning to service. Verify COM squelch is acceptable per Section 7.1.2.4. Repeat configuration steps described in Section 7.1.1.1 (COM Configuration). Repeat configuration steps described in Section 7.4.1.1.2 (VOR/LOC/GS Configuration) and Section 7.4.2.1 (Serial Tuned DME Configuration). Perform ground checks per Section 7.1.2 (GTN Ground Checks), Section 7.4.1.2.2 (VOR/ILS/GS Indicator) and Section 7.4.2.2 (Interface Check). Ensure that the GTN software is the specified version on the *GTN Part 23 AML STC Equipment List* (P/N 005-00533-C1). Ensure that the Basemap, Navigation, SafeTaxi, and Obstacle databases are up-to-date per Section 3.4 and insert SD card from previous GTN into the replacement unit.	GTN 6XX/7XX
Replacing configuration module with new module	Database cards need to be recreated when updating the configuration module. Refer to Section 3.4 for instructions regarding database updates. Feature enablements must be reactivated. A new feature enablement card is required. Contact Garmin for a new feature enablement card.	GTN 6XX/7XX

Modification	Required Action	Affected Models
Replacing navigation indicator	Repeat calibration per section Section 7.4.1.1.1.1 (OBS Resolver Calibration) (if using GPS) or Section 7.4.1.1.2.1 (Calibrate Resolver) if using VOR/LOC/GS receiver.	GTN 6XX/7XX
Replacing GMA 35	Refer to Section 7.2.1 for configuration steps. Perform checkout procedures per Section 7.2.2. Ensure that the GMA software is the specified version on *Equipment List, GTN 6XX/7XX Part 23 AML STC* (P/N 005-00533-C1).	GMA 35
Replacing GMA 35c	Refer to Section 7.2.1 for configuration steps. Perform checkout procedures per Section 7.2.2. Perform the connector engagement check. Refer to Section 7.1.2.1 for details. Ensure that the GMA software is the specified version on *Equipment List, GTN 6XX/7XX Part 23 AML STC* (P/N 005-00533-C1).	GMA 35c
Replacing a serial tuned DME	Perform interface check per Section 7.4.2.2 (Interface Check).	GTN 650/750
Replacing a display	Perform the appropriate interface check per Section 7.4.3 (Displays).	GTN 6XX/7XX
Replacing a transponder	Configure remote transponder per Section 7.4.4.1 (Remote Transponder Configuration). Perform interface check per Section 7.4.2.2 (Interface Check).	GTN 6XX/7XX
Replacing altitude encoders, air data computers, or fuel-air data computers	No action required.	GTN 6XX/7XX
Replacing traffic system or weather system	Perform the appropriate interface check per Section 7.4.5.	GTN 6XX/7XX
Replacing weather radar	Perform the appropriate interface check per Section 7.4.6.	GTN 725/750
Replacing fan	Perform the fan interface check per Section 7.4.8 (Fan Interface Check).	GTN 6XX/7XX
Replacing a Flight Stream 210	No configuration/interface checkout procedures are required to return to service.	Flight Stream 210
Replacing a Flight Stream 510	Update databases as necessary, as described in Section 3.4.	Flight Stream 510

7.1.1 GTN Configuration Steps

7.1.1.1 COM Configuration Page (GTN 635/650/750 Only)

Select the ***COM Configuration*** page from the ***GTN Setup*** page. These values are set at the factory and rarely require calibration.

To enable or disable the COM radio, touch the **COM** key to toggle between *Enabled* and *Disabled*. The COM radio defaults to the enabled state.

Review the COM configuration settings on the GTN and compare them against the GTN Configuration and Checkout Log. A copy of the GTN Configuration and Checkout Log form may be found in the appendices of this document. If any of the settings differ from the checkout log, update the settings to the correct value. For information regarding individual settings, refer to *GTN 6XX/7XX Part 23 AML STC Installation Manual*.

7.1.1.2 Enabled Features

Refer to Section 7.5 for instructions on feature enablement. If the configuration module is not replaced, the enabled features will be retained upon replacing the GTN.

7.1.2 GTN Ground Checks

Ground checks of the GTN require the GTN to be powered up in Configuration mode, as described in Section 3.3.

7.1.2.1 Connector Engagement Check

Prior to configuration and checkout of the GTN, the connector engagement should be checked as described below:

1. Ensure that the GTN GPS/NAV and COM circuit breakers are open.
2. Slide the GTN straight into the rack until it stops about 1 inch short of the fully seated position.
3. Insert a 3/32" hex drive into the unit retention mechanism access hole at the bottom of the unit face and turn the tool clockwise while pressing the bezel until the unit is firmly seated in the rack.
4. With the GTN seated, reapply power by closing the circuit breakers and turning on the avionics master switch (if installed).
5. Insert the hex drive into the unit retention mechanism access hole. Turn the tool counterclockwise to back out the retention mechanism. Ensure that three complete revolutions of the Allen screw can be performed without a red “X” indication or loss of power to the GTN.

NOTE

If power is lost, or the red “X” condition occurs with fewer than three turns, ensure there are no obstructions to the unit fully seating in the rack. The mounting rack may need to be moved aft (i.e., toward the pilot) such that the aircraft panel does not obstruct the unit from properly engaging in the rack.

6. Open the circuit breakers to remove power from the unit and re-seat the GTN per step 3. Close the breakers to restore power to the unit.

7.1.2.2 Signal Acquisition Check

NOTE

All other avionics should be turned off at the start of this test, with the GTN powered on in Normal mode. After re-installation, the initial acquisition of position can take up to 20 minutes. Subsequent acquisitions will not take as long.

NOTE

For best results, this check should be performed outdoors away from large buildings or objects that could obstruct the GPS antenna.

Ensure the GTN is able to acquire sufficient satellites to compute a GPS position. From the ***Home*** page, touch the **System** key and then touch the **GPS Status** key. Under GPS Solution, ensure that a "3D Fix" or "3D Diff Fix" is obtained. If the unit is unable to acquire satellites, move the aircraft away from obstructions that might be shading GPS reception. If the GPS solution does not improve, check the GPS antenna installation.

Once GPS position information is available, verify that the LAT/LON agree with a known reference position.

7.1.2.3 Receiver/Transmitter Operation (GTN 635/650/750 Only)

Tune the unit to a local VHF frequency and verify the receiver output produces a clear and understandable audio output. Verify the transmitter functions properly by contacting another station and getting a report of reliable communications.

7.1.2.4 COM RX Squelch Check (GTN 635/650/750 Only)

NOTE

COM RX Squelch was referred to as COM RF Squelch in software versions prior to v6.50. The COM RX Squelch settings allow adjustment of the noise signal strength required to break squelch for the COM receiver.

In late 2013, Garmin changed the GTN COM radio factory calibration process to allow the level at which the auto squelch opens or closes to be set at a more sensitive level. The COM RX squelch range (0-100) was remapped, as shown in Table 7-2. Installations of radios with the expanded sensitivity calibration process may require a different COM RX Squelch setting to achieve the desired RX squelch performance. All current production units are shipped with the expanded sensitivity calibration process.

Approximate levels when the auto squelch opens and closes for various COM RX squelch settings is provided in Table 7-2. Installations of GTNs with the expanded sensitivity calibration will generally use a COM RX Squelch setting of 75 or higher. Installations of GTNs with the original sensitivity calibration will generally use a COM RX squelch setting of 0 or higher.

Table 7-2 Summary of COM RX Squelch Settings and Auto Squelch Levels

COM RX Squelch Setting		Original Calibration Approximation	Expanded Calibration Approximation
0	Auto Squelch open	-99 dBm	-105 dBm
	Auto Squelch close	-101 dBm	-107 dBm
75	Auto Squelch open	-97 dBm	-99 dBm
	Auto Squelch close	-99 dBm	-101 dBm
100	Auto Squelch open	-93 dBm	-93 dBm
	Auto Squelch close	-95 dBm	-95 dBm

To set the COM Squelch setting, tune the COM to a local COM frequency. Verify squelch breaks when the pilot begins talking. If the squelch breaks too early, increase the value. If it does not open when the pilot begins speaking over the radio, decrease the value.

COM Carrier Squelch Check (GTN Main Software v6.50 or Later, COM v2.30 or Later)

COM carrier squelch settings allow adjustment of the carrier signal strength required to break squelch for the COM receiver.

The COM carrier squelch level adjustment reduces the sensitivity of the COM receiver. Elevated, ambient RF interference levels in certain flight environments, such as aircraft operating busy airport environments or aircraft with equipment installed that interferes with the COM radio, may require adjustment of the COM carrier squelch to reduce undesired squelch breaks.

Table 7-3 COM Carrier Squelch Selections

Selection	Description
Basic	Applies a COM carrier squelch value of 0 to 25 kHz and 8.33 kHz spacing.
Advanced	Allows the adjustment of COM carrier squelch values.
Spacing	Allows the adjustment of COM carrier squelch values for 25 kHz and 8.33 kHz spacing separately.
Squelch	The COM carrier squelch is adjustable in the range of 0 to 100. The default value is 0. Decreasing the value allows the carrier squelch to be broken with low signal levels. Increasing the value requires higher signal levels to break carrier squelch.

Table 7-4 lists approximate levels when the carrier squelch opens for various COM Carrier Squelch settings. Installations requiring adjustment generally use a COM carrier squelch setting of 33 or higher for 25 kHz spacing and 0 for 8.33 kHz spacing.

Table 7-4 COM Carrier Squelch Selections

COM RF Squelch Setting [1]	**Carrier Squelch Open Approximation**	
	25kHz Spacing	**8.33 kHz Spacing** [3]
0 [3]	-96 dBm	-94 dBm
33	-93 dBm	-91 dBm
55 [2]	-91 dBm	-89 dBm
66	-90 dBm	-88 dBm
100	-87 dBm	-85 dBm

Notes:

[1] The COM carrier squelch range (0-100) is a linear response.

[2] Many aviation COM radios have the carrier squelch set to open at approximately -91 dBm in 25 kHz spacing and -94 dBm in 8.33 kHz spacing.

[3] Setting the 8.33 kHz COM carrier squelch value to 0 ensures compliance with ETSO-2C169a. When the 8.33 kHz COM carrier squelch is set to a non-zero value, the COM receiver may not meet the multi-carrier sensitivity requirement of 3.1.3.2 of ED-23C.

7.2 GMA 35

The following steps must be performed when replacing a GMA 35 Audio Panel:

1. Configure audio panel per Section 7.2.1.
2. Perform ground check per Section 7.2.2.

7.2.1 GMA 35 Audio Panel Configuration (GTN 7XX Only)

7.2.1.1 GMA 35 Audio Panel Settings

In Configuration mode, touch the **External Systems** key (refer to Figure 3-8) followed by the **Audio Panel** key. The ***Audio Panel*** page (Figure 7-1) will be displayed. Touch the **Configure** key to access configuration settings for audio routing, volume, and miscellaneous options. Refer to Figure 7-1. Touch **Back** to return to the ***Audio Panel*** page.

Touch the **Connected Radios** key to set the status (*Present* or *Not Present*) of COM 2, COM 3, NAV 1, NAV 2, RCVR 3, RCVR 4, RCVR 5, TEL, Music 1, Music 2, and Marker Beacon. Touch **Back** to return to the ***Audio Panel*** page.

Review the GMA 35 Audio Panel configuration settings on the GTN and compare them against the GTN Configuration Log. A copy of the GTN Configuration Log form may be found in the appendices of this document. If any of the settings differ from the checkout log, update the settings to the correct value. For information regarding individual settings, refer to *GTN 6XX/7XX Part 23 AML STC Installation Manual*.

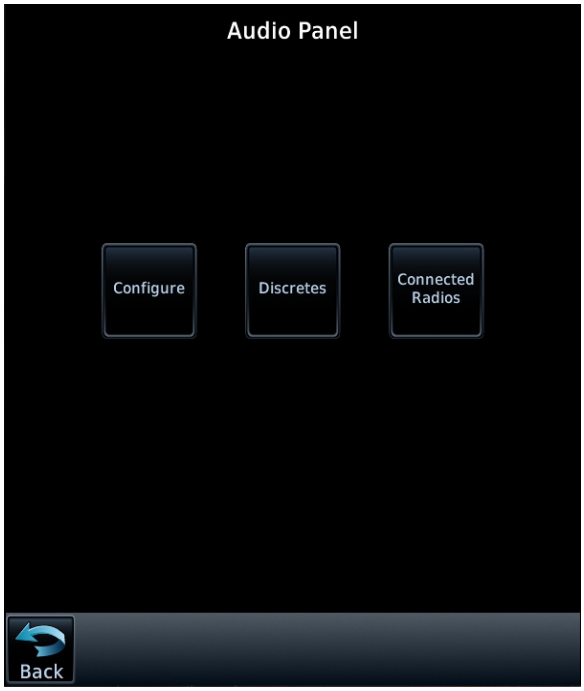

Figure 7-1 Audio Panel Page

7.2.2 GMA 35 Audio Panel Checkout (GTN 7XX Only)

7.2.2.1 GMA 35 Interface Check (GTN 7XX Only)

1. With the GTN running, and the GMA 35 Audio Panel powered on, go to the home page and touch the **Audio Panel** key.
2. Ensure that a red "X" is not displayed over the **Audio Panel** key.

After configuring the audio panel, an in-aircraft checkout may be performed with a good microphone, headset, speaker, and avionics receivers. For testing the marker beacon, use a ramp tester that transmits a 75 MHz marker beacon test signal.

For instructions on how to operate the GMA 35 in Normal mode during checkout procedures, refer to *GTN 725/750 Pilot's Guide*.

NOTE

In the following procedural steps, allow for variation in the configuration settings for the particular installation under test.

7.2.2.2 GMA 35c Bluetooth Audio Check

While on the ground, turn on the GTN and GMA 35c. A compatible Bluetooth-capable device is required.

NOTE

To verify telephone audio, a Bluetooth-compatible phone is required.

1. Go to the ***GMA 35c*** page by touching **System → Connext Setup → GMA 35c**.
2. Ensure Bluetooth is enabled.
3. On the PED, view the list of available Bluetooth devices.
4. Select the device that matches the Bluetooth name shown on the GTN screen.
5. Verify the PED is paired with the GTN. A green check mark is displayed by the paired device.
6. Touch **Intercom** on the GTN 725/750.
7. Touch **Bluetooth Audio** and set distribution to *Pilot, Copilot, and Passenger*.
8. Touch **Radio** to mute Bluetooth during radio transmissions.
9. Touch **Intercom** to mute Bluetooth during intercom transmissions.
10. Verify audio from PED is distributed to the selected positions.
11. Tune and monitor a COM frequency to ensure communications over the radio are easily heard over the audio.

NOTE

If different values are used for the telephone and audio volume settings, repeat this procedure while making a call from a Bluetooth-compatible phone.

12. Adjust the Bluetooth volume as necessary.

7.2.2.3 Failsafe Operation Check

1. Power the GMA 35 off by opening the audio panel circuit breaker.
2. Check the failsafe operation by exercising the COM1 microphone, microphone key, and audio over the pilot's headphones.

NOTE

Use of a true mono headset is required for this test to ensure proper wiring, even if a stereo jack is provided in the installation. Wiring left channel (tip contact) and right channel (ring contact) backwards will cause Failsafe mode not to function with mono headsets. Use of a true mono headset is required for this test (not a stereo headset with a mono/stereo switch because headset manufactures differ on how they accomplish this switching). This will guarantee the condition of the right channel (ring terminal) being shorted to the return (sleeve terminal) by the mono headset's plug. During power-on operation, this short will not damage the audio panel.

3. Verify that COM1 can key and transmit the pilot's mic audio by verifying received sidetone or checking reception of the transmission with another radio tuned to receive this transmission (verify Pilot PTT and mic operation is delivered to this transceiver).
4. Turn the unit back on to continue testing.

NOTE

If the configuration setting COM 1 is Connected as COM 2 is set to True, then the COM 2 microphone should be exercised rather than COM 1.

7.2.2.4 COM Transceiver Operational Check

1. Connect a headset to the pilot's headset output and mic input jack.
2. Verify that each installed transceiver (COM) can be heard when selected.

NOTE

Depending on configuration settings, the mic selected COM may mute audio from other COMs.

3. Verify that each installed transceiver keys for transmission and transmits clear audio from the pilot's mic when selected for transmission and the pilot **PTT** key is pressed. Verifying transmission with a separate radio that is not in the system is recommended because the audio panel can be configured to simulate received sidetone internally.

NOTE

Depending on configuration settings, other transceivers may be muted during transmit. The audio panel may mute the speaker during PTT.

4. Move the headset to the copilot's headset jacks and verify that any one of the installed transceivers (testing each is not necessary) receives and transmits copilot mic properly as above.

7.2.2.5 NAV Audio Check

Ensure the GMA 35 and each installed NAV receiver is powered on.

1. Tune the NAV receiver to a local VOR station.
2. Ensure the Morse code identifier is being received over the crew headsets.
3. If the audio is not heard, verify the wiring to the audio panel.
4. Ensure the audio volume is sufficient for all anticipated cockpit noise conditions.

Repeat steps 1 through 4 for each installed NAV receiver.

7.2.2.6 Alert Audio Check

If there is an alert audio source connected to the GMA 35, the interface should be verified as described below:

1. Cause the alert audio source to produce audio (e.g., if a traffic system is installed, command the traffic system into Self-Test mode; if a TAWS system is installed, command the TAWS system into Self-Test mode).
2. Verify that the alert audio source is heard in the pilot and copilot headsets and that the audio volume is sufficient for all anticipated cockpit noise conditions. Adjust the audio volume level as needed. For modification of configuration settings, refer to *GTN 6XX/7XX Part 23 AML STC Installation Manual*.
3. If the alert audio source is not heard in the crew headsets, check the wiring from the source to the GMA 35 alert audio inputs.

Repeat steps 1 through 3 for each alert audio source connected to the GMA 35.

7.2.2.7 Receiver Audio Check

If there are receiver audio sources connected to the GMA 35, the interface should be verified as described below. Ensure the GMA 35, as well as each interfaced receiver (e.g., DME, ADF, etc.), is powered on.

1. Plug in a headset at pilot and copilot position.
2. Tune the installed receiver to a valid station.
3. Ensure audio is being received over the crew headsets.
4. Ensure the audio volume is sufficient for all anticipated cockpit noise conditions. Adjust the audio output level as needed at the receiver.

Repeat steps 2 through 4 for each installed receiver.

7.2.2.8 Intercom System (ICS) Check

NOTE

If a mono headset is plugged into a stereo phone jack position, damage will not occur to the GMA 35. If a passenger plugs a mono headset in any passenger position, stereo listeners will lose one channel.

1. Place the audio panel into ALL ICS mode (refer to *GTN 725/750 Pilot's Guide*) so that all ICS positions hear all others.
2. De-select or turn off other audio sources (e.g., MKR, transceivers, receivers, alerts). Some configurations may mute passenger intercom audio to crew when aircraft audio is present.
3. From the pilot headset position, verify the pilot, copilot, and all passenger mic inputs can be heard in the pilot's headset when speaking into the mic input under test (adjust pilot ICS volume, if necessary).
4. Speak into the pilot's mic and verify that pilot mic audio is heard in the copilot headset (adjust copilot ICS volume, if necessary) and in each passenger headset (adjust passenger ICS volume, if necessary).

7.2.2.9 Music System Check (if installed)

1. Set the intercom to the ALL mode.
2. Connect a stereo audio source to MUSIC 1 or MUSIC 2. Verify that stereo audio is heard over the pilot headset position.
3. Tune a station on COM 1 and verify that the sound is muted by active COM 1 audio (break squelch on COM 1, if necessary).
4. Verify that stereo audio is heard in the passenger headsets.

7.3 Configuration Module

Upon replacing a configuration module with a new configuration module unit, no further action is required. Installation of a used configuration module is not recommended.

7.4 Interfaced Equipment

This manual does not cover the removal/replacement of the following interfaced equipment. However, the following procedures are required to ensure proper functionality with the interfaced equipment. Perform the following calibration procedures and interface checks after re-installing or replacing any of the optionally interfaced equipment.

7.4.1 Navigation Indicator

1. Perform calibration per Section 7.4.1.1.1.1 (if using GPS) or Section 7.4.1.1.2.1 (GTN 650/750 only) if using VOR/LOC/GS receiver.
2. Perform ground checks per Section 7.4.1.2 and the appropriate interface check.

7.4.1.1 Navigation Indicator Calibration

7.4.1.1.1 Main Indicator (Analog) Configuration Page

Select the ***Main Indicator (Analog) Configuration*** page, shown in Figure 7-2, from the ***GTN Setup*** page. This page allows you to calibrate the OBS resolver, configure the CDI key, selected course for GPS and VLOC, as well as the V-Flag state. Configurable fields are described in the following sections.

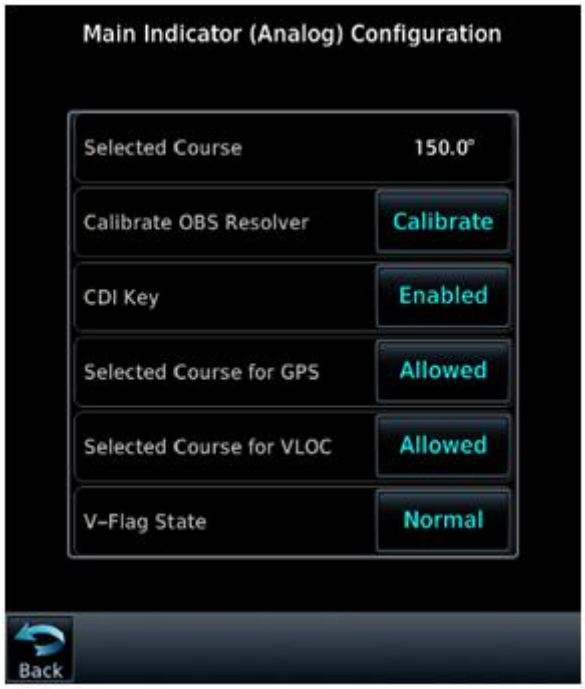

Figure 7-2 Main Indicator (Analog) Configuration Page

7.4.1.1.1.1 Main Indicator OBS Resolver Calibration

To calibrate the OBS resolver, touch the **Calibrate** key from the ***Main Indicator Configuration*** page. Next, select **150**˚ on the External CDI/HSI then touch the **OK** key, as prompted on the display. After the OBS resolver has completed calibrating, the GTN will display, "OBS Resolver Calibration Complete!" Touch **OK** after the calibration is complete. Verify OBS operation by checking that the selected course displayed at the top of the page is within 2° of the selected course.

The ***Main Indicator (Analog) Configuration*** page allows the CDI connected to the NAV board (P1001) to be ground checked and allows the NAV indicator interface to be verified. Refer to Section 7.4.1.2.1 for the ground check.

7.4.1.1.2 VOR/LOC/GS Configuration Page (GTN 650/750 Only)

Select the **VOR/LOC/GS** key on the ***GTN Setup*** page. This page allows you to verify the CDI outputs from the VOR/LOC/GS receiver as well as the OBS resolver input to the VOR receiver. It allows you to select the format for the DME tuning data.



Figure 7-3 VOR/LOC/GS Configuration Page

7.4.1.1.2.1 Calibrate OBS Resolver

To calibrate the OBS resolver, touch the **Calibrate** key from the ***VOR/LOC/GS Configuration*** page. Next, select **150**˚ on the external CDI/HSI, then touch the **OK** key when prompted by the display. Touch **OK** after calibration is complete. Verify OBS operation by checking that the selected course displayed at the top of the page is within 2° of the selected course.

7.4.1.2 Navigation Indicator Ground Checks (Configuration Mode)

7.4.1.2.1 Main Indicator Check (Analog Only)

NOTE

If the GTN is interfaced to an electronic HSI/EFIS, and the main indicator analog output is not used, this check is not required.

NOTE

To verify if the indicator is interfaced with the GTN on the main connector (P1001), examine the response of the indicator during the GTN self-test upon power-up. If the indicator responds according to the values described on the screen, then it is connected to the main connector.

If the GTN is interfaced to an analog indicator on the main connector (P1001), perform the following steps in Configuration mode. Refer to Section 3.3.

1. From the ***Configuration Mode*** page (Figure 3-8), touch **GTN Diagnostics** key.
2. Touch the **Main Indicator (Analog)** key.
3. Verify correct operation of the lateral deviation, flag, and TO/FROM flag using the corresponding selections.
4. Verify correct operation of the vertical deviation and flag using the corresponding selections.
5. Verify correct operation of the OBS knob using the OBS Resolver Setting display. At 30° increments around the OBS card, ensure that the indicated value is within 2° of the value set on the indicator. If the resolver is not within 2°, calibrate the resolver as described in Section 7.4.1.1.1.1.

7.4.1.2.2 VOR/LOC/GS Indicator

If the GTN is interfaced to an analog indicator on the VOR/ILS connector (P1004), perform the following steps:

1. From the ***Configuration Mode*** page (Figure 3-8), touch **GTN Diagnostics** key.
2. Touch the **VOR/ILS Indicator (Analog)** key.
3. Verify correct operation of the lateral deviation, flag, and TO/FROM flag using the corresponding selections.
4. Verify correct operation of the vertical deviation and flag using the corresponding selections.
5. Verify correct operation of the OBS knob using the Selected Course display. At 30° increments around the OBS card, ensure that the indicated value is within 2° of the value set on the indicator. If the resolver is not within 2°, calibrate the resolver as described in Section 7.4.1.1.2.1.

7.4.2 Serial Tuned DME

7.4.2.1 Serial Tuned DME Configuration

Under the ***VOR/LOC/GS Configuration*** page, set the DME mode and DME Channel mode to the values specified in the configuration checkout log. Configuration of these settings is required if exchanging GTN 650/750 units, but is not required if replacing a DME with an equivalent unit.

7.4.2.2 Interface Check (650/750 Only)

Verify the interface performing the following steps:

1. Select a VOR/ILS channel that corresponds to (1) a DME station within a 40 nautical mile range or (2) the frequency of a DME ground tester.
2. Verify that the DME locks on to the signal and a valid distance is displayed.
3. Tune an invalid VOR station. Verify that the DME data is flagged.
4. If multiple GTNs are set up to remotely channel a DME, repeat steps 1-3 using the other GTN.

7.4.3 Displays

Perform the appropriate interface check for the replaced EHSI, EFIS, PFD, or MFD. No additional configuration on the GTN is required when replacing a display with an equivalent unit.

7.4.3.1 Honeywell (Bendix/King) EFS 40/50 Interface Check

If a Honeywell EFS 40/50 has been connected to the GTN, the interface should be verified as described in this section.

1. Cycle power to the first GTN and acknowledge the prompts until on the ***Instrument Panel Self-Test*** page (refer to Section 6.1.1).
2. Ensure that GPS1 data displays by pressing the **1-2** key on the EFS 40/50 control panel.
3. While the GTN displays the ***Instrument Panel Self-Test*** page, verify that the EFS 40/50 displays data from the GPS source:
   - Course Deviation: Half-scale left deviation, TO indication, flag pulled
   - Active Waypoint: GARMN
   - Vertical Deviation: Half-scale up deviation (only if installation is setup to display GPS vertical deviation)
4. On the GTN, verify that an OBS value displays and is not dashed out.
5. Using a VOR test set, verify that the CDI deviation on the EFS 40/50 displays correctly.
6. Cycle power to the second GTN and acknowledge the prompts until on the ***Instrument Panel Self-Test*** page.
7. If a second GTN is installed, switch to GPS2 data by pressing the **1-2** key on the EFS 40/50 control panel and repeat steps 3 through 5 with GTN #2.

7.4.3.2 Sandel SN3308 Interface Check

If a Sandel EHSI has been connected to the GTN, the interface should be verified as described in one of the following sections, as appropriate for the installation.

7.4.3.2.1 One GTN/One SN3308

1. Cycle power to the GTN and acknowledge the prompts until on the ***Instrument Panel Self-Test*** page (refer to Section 6.1.1).
2. Ensure that the SN3308 receives valid heading.

NOTE

The Vertical Deviation Indication will not be displayed unless the SN3308 is receiving valid heading.

3. While the GTN is displaying the ***Instrument Panel Self-Test*** page, verify that the SN3308 displays the following data from the GPS source:
   - Course Deviation: Half-scale left deviation, TO indication, flag pulled
   - Vertical Deviation: Half-scale up deviation, flag pulled
   - Active Waypoint: GARMN
4. On the GTN, verify that an OBS value displays and is not dashed out.
5. Acknowledge the self-test on the GTN by touching the **Continue** key.
6. Select **VLOC** on the GTN and verify that the SN3308 displays NAV 1 or NAV 2 (depending on the GTN navigation source configuration).
7. Using a VOR test set, verify that the CDI deviation on the SN3308 displays correctly.

7.4.3.2.2 Two GTNs/One SN3308

1. Remove power from GTN #2 by opening up the circuit breaker.
2. Cycle power to GTN #1 and acknowledge the prompts until on the ***Instrument Panel Self-Test*** page (refer to Section 6.1.1).
3. Select GPS1 as the navigation source by pressing the **NAV** key on the SN3308. Verify that "GPS1" displays on the SN3308.
4. Ensure that the SN3308 receives valid heading. The Vertical Deviation Indication will not display unless the SN3308 receives valid heading.
5. While GTN #1 displays the ***Instrument Panel Self-Test*** page, verify that the SN3308 displays the following data from GPS1:
   - Course Deviation: Half-scale left deviation, TO indication, flag pulled
   - Vertical Deviation: Half-scale up deviation, flag pulled
   - Active Waypoint: GARMN
6. On GTN #1, verify that an OBS value displays and is not dashed out.
7. Acknowledge the self-test on GTN #1 by touching the **Continue** key.
8. Select **VLOC** on GTN #1 and verify that the SN3308 displays "NAV 1" or "NAV 2" depending on which navigation source the GTN is.
9. Using a VOR test set, verify that the CDI deviation on the SN3308 displays correctly.
10. Remove power from GTN #1 and apply power to GTN #2. Acknowledge the prompts until the ***Instrument Panel Self-Test*** page displays. Refer to Section 6.1.1. Select GPS2 by pressing the **NAV** key on the SN3308.
11. Repeat steps 5 through 9 with GTN #2.

7.4.3.2.3 Two GTNs/Two SN3308s

1. Remove power from GTN #2.
2. Cycle power to GTN #1 and acknowledge the prompts until on the ***Instrument Panel Self- Test*** page (refer to Section 6.1.1). Select GPS1 as the navigation source by pressing the **NAV** key on the SN3308 #1. Verify that "GPS1" displays on the SN3308.
3. Ensure that the SN3308 receives valid heading. The Vertical Deviation Indication will not display unless the SN3308 receives valid heading.
4. While GTN #1 displays the ***Instrument Panel Self-Test*** page, verify that the SN3308 displays the following data from GPS1:
   - Course Deviation: Half-scale left deviation, TO indication, flag pulled
   - Vertical Deviation: Half-scale up deviation, flag pulled
   - Active Waypoint: GARMN
5. On GTN #1, verify that an OBS value displays and is not dashed out.
6. Acknowledge the self-test on GTN #1 by touching the **Continue** key.
7. Select **VLOC** on GTN #1 and verify that the SN3308 displays "NAV 1" or "NAV 2" depending on which navigation source the GTN is.
8. Using a VOR test set, verify that the CDI deviation on the SN3308 displays correctly.
9. Remove power from GTN #1 and apply power to GTN #2. Acknowledge the prompts until the ***Instrument Panel Self-Test*** page displays (refer to Section 6.1.1).
10. Select GPS2 by pressing the **NAV** key on the SN3308.
11. Repeat steps 4 through 8 with GTN #2.

Perform the same procedure for the second SN3308. Ensure that SN3308 #2 receives valid heading by ensuring the vertical deviation indication displays.

7.4.3.3 Sandel SN3500/4500 Interface Check

If a Sandel SN3500/4500 EHSI has been connected to the GTN, the interface should be verified as described in this section.

1. Cycle power to the GTN and acknowledge the prompts until on the ***Instrument Panel Self-Test*** page (refer to Section 6.1.1).
2. Ensure that the SN3500/4500 receives valid heading. The Vertical Deviation Indication will not display unless the SN3500/4500 is receiving valid heading.
3. While the GTN displays the ***Instrument Panel Self-Test*** page, verify that the SN3500/4500 displays data from the GPS source:
   - Course Deviation: Half-scale left deviation, TO indication, flag pulled
   - Vertical Deviation: Half-scale up deviation, flag pulled
   - Active Waypoint: GARMN
4. On the GTN, verify that an OBS value displays and is not dashed out.
5. Acknowledge the self-test on the GTN by touching the **Continue** key.
6. Select **VLOC** on the GTN and verify that the SN3500/4500 displays "NAV 1" or "NAV 2" depending on which navigation source the GTN is.
7. Ensure that the NAV1 (or NAV2) indication does not have a red line through it.
8. Repeat steps 3 through 7 for GTN #2, if installed.

7.4.3.4 EHSI Deviation Scaling for HSI/CDI Driven by GTN through ARINC 429 Data

If the GTN has a serial connection to an EFIS display, proper scaling of the EFIS CDI and VDI must be verified.

1. Cycle power to the GTN and acknowledge the prompts until on the ***Instrument Panel Self-Test*** page (refer to Section 6.1.1).
2. With the ***Instrument Panel Self-Test*** page displayed on the GTN, look on the EHSI/EFIS and verify that the lateral deviation is half-scale left and not flagged.
3. With the ***Instrument Panel Self-Test*** page displayed on the GTN, look on the EHSI/EFIS and verify that the vertical deviation is half-scale up and not flagged.

7.4.3.5 GMX200/MX20 Interface Check

The Garmin GMX 200 or MX20 interface should be verified as described in this section.

1. Ensure that the GTN has a 3-D position fix.
2. Create and activate a flight plan on the GTN by touching the **Direct-To** key and entering a waypoint.
3. Verify that the RTE and POS data flags does not display on the GMX 200/MX20.
4. Verify that the flight plan displays on the GMX 200/MX20 using the flight plan (FPL) function.

7.4.4 Transponder

1. For remote transponders, configure transponder per Section 7.4.4.1.
2. Perform interface check per Section 7.4.4.2.

7.4.4.1 Remote Transponder Configuration

A remote transponder can be configured by the GTN through RS-232 if a transponder is configured for one of the RS-232 ports. To configure the transponder, it must first be selected as *Present* and the type of transponder installed must be specified. To do this, access the ***Interfaced Equipment*** page on the ***GTN Setup*** page (Figure 3-11). Next, go to the ***External Systems*** page and touch the **XPDR** key. This displays the page shown in Figure 7-4, which allows the remote transponder to be configured. The remote transponder should be configured in accordance with the installation manual for that specific transponder.

NOTE

If the GTN controls any transponder (GTX 3XX/3XXR), then that transponder will boot into the same mode (Normal or Configuration) as the GTN.

NOTE

If the GTN is not communicating with the GTX transponder, all of the editable fields for the setup items shown in the following sections will be dashed out. If the fields are dashed out, check the wiring and pin connections from the GTN to the transponder.

NOTE

The GTX 335R/345R must be configured through the GTX 3X5 Install Tool. Refer to GTX 3X5 TSO Installation Manual for more information.

NOTE

The GTN can interface to the GTX 3XX; however, configuration of the panel-mounted GTX 3XX is not supported. These transponders should be configured per their installation manuals rather than through the GTN.

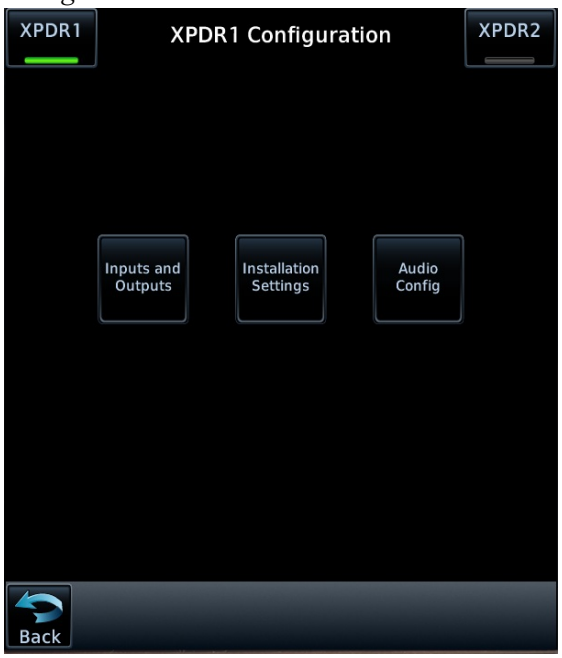

Figure 7-4 XPDR1 Configuration Page

7.4.4.2 Transponder Interface Check

If the GTN is interfaced to a GTX 32/33/3X5R remote transponder, or a GTX 3XX configured as a remote transponder, the following checks must be completed:

1. With the GTN unit running in Normal mode, and the transponder powered on, go to the home page and ensure there is not a red "X" over the transponder data field on the screen.
2. Check that a code can be entered into the Code field. Enter a code using the keypad and then touch the **Enter** key. Check that the code that was entered is displayed in the Transponder Data field.
3. If dual transponders are installed, select **Transponder 2** and perform steps 1 and 2 for the second transponder as well.
4. To verify wiring is not crossed, open the Transponder 1 circuit breaker and verify the Transponder 1 data field has a red "X".
5. Repeat the steps 1 through 3 for GTN #2.

7.4.5 Traffic or Weather System

Perform the appropriate interface check for the traffic or weather system. Additional GTN configuration steps are not required for replacing a traffic or weather device with an equivalent unit.

7.4.5.1 Ryan TCAD Traffic System Interface Check

If a Ryan TCAD has been connected to the GTN 6XX/7XX unit, the traffic interface should be verified as described in this section.

1. Go the ***Traffic*** page on the GTN from the Home page group.
2. Verify that "NO DATA" is not displayed in yellow in the center of the ***Traffic*** page.
3. Using the SHIELD SETUP under the Traffic menu, verify that the shield mode can be changed.

7.4.5.2 ARINC 429 Traffic System Interface Check

If a Garmin GTS 8XX Traffic system, L-3 Communications SKY497/SKY899 SkyWatch® sensor, or a Honeywell (Bendix/King) KTA 810 TAS/KMH 820 IHAS has been connected to the GTN through ARINC 429, the traffic interface should be verified as described in this section.

1. Go to the ***Traffic*** page on the GTN from the home page.
2. Verify that "NO DATA" is not displayed in yellow in the center of the ***Traffic*** page.
3. If the GTN is configured to control the traffic system, verify that the traffic system mode can be changed from STBY to OPER.
4. Switch the traffic system mode to STBY, and then run the traffic self-test from the menu.
5. Verify that the traffic system executes a self-test and that a self-test pattern is displayed on the GTN traffic display.
6. Restart the GTN in Configuration mode.
7. On the ***Traffic*** page in the External Systems page group, verify that there is data displayed in the Altitude field.

7.4.5.3 Stormscope® Interface Check

If an L-3 Communications WX-500 Stormscope has been connected to the GTN, the Stormscope interface should be verified as described in this section.

1. Go to the ***Lightning*** page on the GTN.
2. Verify that "STORMSCOPE FAILED" is not displayed in yellow in the center of the ***Lightning*** page.
3. Verify that the Stormscope mode can be changed from *Strike* to *Cell*, and vice versa.

7.4.5.4 TIS (Garmin GTX 33/330/335) Interface Check

If a Garmin GTX 33/330/335 transponder has been connected to the GTN as a TIS traffic source, the traffic interface should be verified as described in this section.

1. Select the ***Traffic Map*** from the GTN home page.
2. Verify that "TIS FAIL" is not displayed in the upper-left corner under Traffic Status, and that "NO DATA" (yellow) is not displayed over the ownship symbol.
3. On the upper-left corner of the ***Traffic Map*** page, verify that the status of the traffic system is either "TIS Standby" or "TIS Operating/Unavailable" (i.e., "TAS" should not be displayed).

The following additional steps should only be completed if the GTN is controlling the traffic system.

1. Open the transponder circuit breaker and verify the Air Data fields have a red "X".
2. If a squat switch (or airspeed switch) is connected to the GTX 3XX, ensure that it is in AIR mode.
3. Alternately, touch the **Standby** key and **Operate** key to change the mode of the traffic system. It may take several seconds for the traffic system to change modes.
4. Verify that the mode of the traffic system can be changed.

7.4.5.5 GTX 345/345R Interface Check

When testing the GTX 345/345R, the aircraft must be located outside and have an unobstructed view of the sky. If the GTX 345/345R is installed and connected to the GTN as the ADS-B In source, check the operation as follows:

1. With the GTN unit running in Normal mode, and the transponder powered on, go to the home page and press the **System** key.
2. Press the **External LRUs** key and make sure that the status for the GTX is a green checkmark.
3. Press the **More Info** key for the GTX and make sure that the GPS status and software versions are reported.
4. Repeated the preceding steps for GTN #2.

7.4.6 Weather Radar

Perform the appropriate interface check for the weather radar. No additional GTN configuration steps are required for replacing a weather radar with an equivalent unit.

7.4.6.1 GWX 68/70/75 Weather Radar Interface Check

This section verifies that the interface between the GTN 7XX and the GWX 68/70/75 weather radar is functional.

1. Start the GTN in Normal mode.
2. On the home page, touch the **Weather** key and then the **Radar** key.
3. Touch the **Mode** key and select *Standby mode* and wait for the warm-up to complete.
4. Touch the **Mode** key again and select *Test mode*.
5. Verify that the GWX 68/70/75 begins sweeping and the test pattern is shown.
6. If supported by the installation, verify that stabilization is on ("STAB On" is displayed in the upper-right corner of the radar display).
7. Touch the **Mode** key, set the mode to *Off*.
8. Repeat steps 1 through 7 for the second GTN 7XX, if installed.

7.4.6.2 ARINC 708 Weather Radar Interface Check

This section verifies that the interface between the GTN 7XX and ARINC 708 weather radar is functional.

WARNING

Aircraft should be outdoors and personnel should not be in front of the weather radar when it is radiating (i.e., when Weather or Ground mode is selected on the GTN).

1. Start the GTN in Normal mode. If there are dual GTN 7XXs, start both in Normal mode.
2. On each GTN, go to the home page, touch **Weather** and then **Radar**.
3. On one GTN, touch the **Mode** key and select *Standby mode* and wait for the warm-up to complete.
4. Touch the **Mode** key again and select Test mode.
5. Verify that the radar begins sweeping and the test pattern is shown.
6. If stabilization is supplied to the radar, turn the radar to Weather mode and turn stabilization *On* in the weather menu. Verify that "STAB On" is displayed in the upper-right corner or the radar display. If "STAB INOP" is displayed, verify that stabilization is being supplied to the weather radar R/T.
7. Touch the **Mode** key to set the mode to *Off*.

NOTE

If only one GTN 7XX is installed, the following steps do not have to be carried out.

8. Repeat steps 1 through 7 for the second GTN 7XX.
9. On each GTN 7XX, touch the **Mode** key and select *Standby mode* and wait for the warm-up to complete.
10. On each GTN 7XX, touch the **Mode** key again and select *Test mode*.

11. On GTN #1, touch the **Zoom Out** key to increase the range of the radar display. Verify that the range on GTN #1 changes and the range on GTN #2 does not change.
12. On GTN #2, touch the **Zoom Out** key to increase the range of the radar display – select a different zoom level than GTN #1. Verify that the range on GTN #2 changes and the range on GTN #1 does not change.
13. On each GTN 7XX, use the **Mode** key to set the mode to *Off*.

7.4.7 GDL 88

When testing the GDL 88, the aircraft must be located outside and have an unobstructed view of the sky. If the GDL 88 is installed and connected to the GTN, perform the following steps. No additional configuration steps are required when replacing the GDL 88 with an equivalent unit.

1. Start all GTNs in Configuration mode as described in Section 3.3.
2. Touch the **External Systems** key.
3. Touch the **GDL 88** key.
4. Touch **Diagnostics** and then the **GPS/SBAS Data** key.
5. Verify that the GDL 88 is receiving valid position source data.
6. Verify that the status of the External PPS connection(s) is valid.

7.4.8 Fan Interface Check

The fan that is mounted to the GTN backplate should be checked after replacing the fan. With the GTN unit running in Normal mode, and the fan powered on and running, go to the home page and touch the **Message Queue** key. Ensure that the "COOLING FAN- the cooling fan has failed" message is not displayed. Note that the fan may take a few minutes to power on if the unit is below normal operating temperature.

7.4.9 Flight Stream 210/510 Interface Checks

7.4.9.1 Bluetooth Setup

When the Flight Stream 210/510 device is powered on, Pairing mode will not be enabled until the ***Connext Setup*** page is opened on the GTN.

The default Flight Stream 210/510 Bluetooth name is "Flight Stream" followed by the three-digit model number (i.e., "210" or "510") and then the last four digits of the MAC address (e.g., Flight Stream 210 4000). A pop-up will appear on the GTN screen asking the pilot to confirm the new Bluetooth pairing. Select **Yes** to finish pairing the device.

Bluetooth setup only needs to be run when pairing with a device for the first time. Once a connection is established with a Bluetooth device, the Flight Stream 210/510 will automatically connect to the Bluetooth device upon power-up. The Flight Stream may be connected to up to four Bluetooth devices simultaneously. The Flight Stream 210/510 will also save up to 13 Bluetooth device pairings.

1. Enable Bluetooth connectivity on the PED. Once enabled, Flight Stream 210/510 will be viewable in the list of available devices.
2. Select the Flight Stream 210/510 from the list of available Bluetooth devices on the PED.

After pairing the Flight Stream 210/510 with the PED, make sure the device is communicating with the GTN, GDL 88 (if installed), and GDL 69A (if installed). This test should be performed outside, away from buildings and large obstructions. If any of the tests below are unsuccessful, refer to Section 6 for troubleshooting information.

7.4.9.2 Flight Stream 210 Interface Checks:

GTN Interface Check

1. On the Garmin Pilot application, go to the ***Flight Plan*** page and create a flight plan.
2. Select the **Connext** icon at the top of the page.
3. Next select the option to send the flight plan to the GTN. If successful, a message will be available on the GTN.

GDL 88 Interface Check (If installed)

1. Go to the ***Traffic*** page on the GTN.
2. Go to the ***Traffic*** page on the Garmin Pilot application.
3. On the GTN ***Traffic*** page, touch the **Menu** key.
4. Touch the **Test** key. If the **Test** key is unavailable, ADS-B Status must be turned off first.
5. Make sure the traffic targets are displayed on the PED.

GDL 69/69A Interface Check (If installed)

1. On the Garmin Pilot application, go to the ***Connext*** page.
2. Select **SiriusXM** under Status and make sure weather data is available.

7.4.9.3 Flight Stream 510 Interface Checks:

GTN Interface Check

1. On the Garmin Pilot application, go to the ***Flight Plan*** page and create a flight plan.
2. Select the **Connext** icon at the top of the page.
3. Next, select the option to send the flight plan to the GTN. If successful, a message will be available on the GTN.

7.5 Enabled Features

Refer to Section 3.3.4 for guidance on enabling features.

7.5.1 Terrain Configuration and Checks (For Units with Terrain Alerting/TAWS Only)

Reconfigure terrain settings per the configuration checkout log. The terrain configuration settings are located under the GTN Options menu.



Figure 7-5 Audio Configuration Page



Figure 7-6 Terrain Configuration Page

7.5.1.1 Terrain System Check

While on the ground, turn on the GTN following normal power-up procedures. Turn on the audio panel.

NOTE

A 3D GPS position fix is required to conduct the check.

1. Select the ***Terrain*** page from the Normal mode home page.
2. Touch the **Menu** key.
3. Touch the **Test Terrain** or **Test TAWS** key.
4. Wait until the Terrain Alerting/TAWS self-test completes (10-15 seconds) to hear the Terrain/TAWS system status aural message.
   - The aural message “Terrain System Test OK” or “TAWS System Test OK” will be annunciated if the Terrain/TAWS system is functioning properly
   - The aural message “Terrain System Failure” or “TAWS System Failure” will be annunciated if the Terrain/TAWS system is NOT functioning properly. “Terrain Fail” or “TAWS FAIL” will appear in amber on the screen

If no audio message is heard, then a fault exists within the audio system or associated wiring and the Terrain/TAWS capability must be considered non-functional. Verify continuity of wiring from GTN to audio panel as specified in *GTN 6XX/7XX Part 23 AMC STC Installation Manual* (P/N 190-01007-A3).

8 RETURN TO SERVICE PROCEDURE

8.1 Maintenance Records

After conducting required return to service procedures in accordance with Table 7-1 and updating aircraft records in accordance with this section and in compliance with 14 CFR 43.9 and 14 CFR 91.417, the aircraft may be returned to service.

Record the following information in the appropriate aircraft maintenance logs:

- Software versions loaded during maintenance
- Part and serial numbers of any LRU replaced
- Any other applicable information related to the maintenance work performed on the aircraft

Verify that replacement LRUs' software and/or FPGA versions match those in the configuration log from Appendix A in the aircraft records.

APPENDIX A AIRCRAFT-SPECIFIC INFORMATION

Acrobat Reader 8.0 or later is necessary to view and fill out the form. You can download Acrobat Reader by visiting www.adobe.com.

When updating software, it is unnecessary to fill out a new configuration log. The Current Revision Description identifies all pages with changes. Fill out the applicable pages and append them to the back of the existing configuration log.

GENERAL INFORMATION

Date:_____/_____/_____ By: _____

AIRCRAFT:

AIRCRAFT MAKE: _____

AIRCRAFT MODEL: _____

AIRCRAFT SERIAL #: _____

AIRCRAFT REG. #: _____

GTN #1:

Unit P/N:_____ Mod Level: _____

Unit Model:_____ Serial #: _____

GPS Antenna P/N #:_____ GPS Antenna Model: _____

GTN #2: ❑ [N/A]

Unit P/N:_____ Mod Level: _____

Unit Model:_____ Serial #: _____

GPS Antenna P/N #:_____ GPS Antenna Model: _____

GMA 35: ❑ [N/A]

Unit P/N:_____ Mod Level: _____

Unit Model:_____ Serial #: _____

FLIGHT STREAM: ❑ [N/A]

Unit P/N:_____ Mod Level: _____

Unit Model:_____ Serial #: _____

GTN 6XX/7XX PART 23 CONFIGURATION LOG – GTN #1

SYSTEM INFORMATION

GTN SOFTWARE VERSIONS

Main Board

Software:_____ Boot Code:_____ FPGA: _____

Touch Controller Board

Software:_____ Boot Code: _____

GPS/WAAS Board

Software: _____

NAV Board ❑ [N/A]

Software:_____ Boot Code:_____ FPGA: _____

COM Board ❑ [N/A]

Software:_____ Boot Code:_____ FPGA: _____

GTN SETUP MENU

ARINC 429 CONFIGURATION

In 1: ❑ High ❑ Low_____ **Out 1:** ❑ High ❑ Low _____

In 2: ❑ High ❑ Low_____ **Out 2:** ❑ High ❑ Low _____

In 3: ❑ High ❑ Low_____ **Out 3:** ❑ High ❑ Low _____

In 4: ❑ High ❑ Low_____ **SDI:** ❑ Common ❑ LNAV 1 ❑ LNAV 2

RS-232 CONFIGURATION

In 1:_____ **Out 1:** _____

In 2:_____ **Out 2:** _____

In 3:_____ **Out 3:** _____

In 4:_____ **Out 4:** _____

In 5:_____ **Out 5:** _____

In 6:_____ **Out 6:** _____

MORE RS-232 SETUP

Forward ALT to GTX ❑Enabled ❑Disabled

This setting is only available if a transponder is configured on a RS-232 port.

GTN 6XX/7XX PART 23 CONFIGURATION LOG – GTN #1 - CONTINUED

GTN SETUP MENU - CONTINUED

HSDB (ETHERNET) CONFIGURATION

Port 1: ❑ Connected ❑ Not Connected **Port 3:** ❑ Connected ❑ Not Connected

Port 2: ❑ Connected ❑ Not Connected **Port 4:** ❑ Connected ❑ Not Connected

INTERFACED EQUIPMENT CONFIGURATION

Cross-Side Navigator: ❑ Present ❑ Not Present Type:_____

GDL 69/69A: ❑ Present ❑ Not Present Type:_____

GDL 88/88D: ❑ Present ❑ Not Present Type:_____

ADS-B In Source: ❑ Present ❑ Not Present Type:_____

GDU #1: ❑ Present ❑ Not Present Type:_____

GDU #2: ❑ Present ❑ Not Present Type:_____

GDU #3: ❑ Present ❑ Not Present Type:_____

GDU #4: ❑ Present ❑ Not Present Type:_____

Transponder #1: ❑ Present ❑ Not Present Type:_____

Transponder #2: ❑ Present ❑ Not Present Type:_____

GSR 56: ❑ Present ❑ Not Present

GWX: ❑ Present ❑ Not Present Type:_____

MAIN INDICATOR (ANALOG) CONFIGURATION

CDI Key: ❑ Enabled ❑ Disabled **Selected Course for VLOC:** ❑ Allowed ❑Ignored

Selected Course for GPS: ❑ Allowed ❑Ignored **V-Flag State:** ❑Normal ❑Declutter

LIGHTING CONFIGURATION (IF ENHANCED LIGHTING IS DISABLED)

Lighting Configuration: ❑**[N/A]**

Display Source: ❑Photocell ❑Lighting Bus 1 **Keys Source:** ❑Photocell ❑Lighting Bus 1 ❑Lighting Bus 2

Display Minimum Level:_____% **Keys Minimum Level:**_____%

Configure Photocell: ❑**[N/A]**

Response Time:_____ sec **Slope:**_____ **Offset**: _____

Photocell Override

Key Backlight Cutoff:_____% **Photocell Transition**: _____

Configure Lighting Bus: ❑**[N/A]**

Lighting Bus 1: ❑14 VDC ❑28 VDC ❑5 VDC ❑ 5VAC

Response Time:_____ sec **Slope:**_____ **Offset:**_____

Lighting Bus 2: ❑**[N/A]** ❑14 VDC ❑28 VDC ❑5 VDC ❑ 5VAC

Response Time:_____ sec **Slope:**_____ **Offset:**_____

GTN 6XX/7XX PART 23 CONFIGURATION LOG – GTN #1 - CONTINUED

GTN SETUP MENU - CONTINUED

ENHANCED LIGHTING CONFIGURATION
(IF ENABLED ON MAIN SYSTEM CONFIGURATION PAGE)

ENHANCED LIGHTING: ❑ **[N/A]**

SOURCE SETTINGS

Display Source: ❑ Photocell ❑ Lighting Bus 1 **Keys Source:** ❑ Photocell ❑ Lighting Bus 1 ❑ Lighting Bus 2

Photocell: Response Time:_____sec

Lighting Bus 1: ❑ **[N/A]** Input Type: ❑ 14 VDC ❑ 28 VDC ❑ 5 VDC ❑ 5VAC Response Time:_____sec

Lighting Bus 2: ❑ **[N/A]** Input Type: ❑ 14 VDC ❑ 28 VDC ❑ 5 VDC ❑ 5VAC Response Time:_____sec

DAY MODE OPERATION

Photocell Transition:_____% **Key Backlight Cutoff:**_____%

DISPLAY

Minimum Level:_____% **Maximum Level:**_____%

Configure Curve

Vertex 1: Input Level_____% **Output Level**_____% **Vertex 3: Input Level**_____% **Output Level**_____%

Vertex 2: Input Level_____% **Output Level**_____% **Vertex 4: Input Level**_____% **Output Level**_____%

KEYS

Minimum Level:_____% **Maximum Level:**_____%

Configure Curve

Vertex 1: Input Level_____% **Output Level**_____% **Vertex 3: Input Level**_____% **Output Level**_____%

Vertex 2: Input Level_____% **Output Level**_____% **Vertex 4: Input Level**_____% **Output Level**_____%

NIGHT MODE OPERATION ❑ **[N/A]**

Photocell Transition:_____% **Key Backlight Cutoff:**_____%

DISPLAY

Minimum Level:_____% **Maximum Level:**_____%

Configure Curve

Vertex 1: Input Level_____% **Output Level**_____% **Vertex 3: Input Level**_____% **Output Level**_____%

Vertex 2: Input Level_____% **Output Level**_____% **Vertex 4: Input Level**_____% **Output Level**_____%

KEYS

Minimum Level:_____% **Maximum Level:**_____%

Configure Curve

Vertex 1: Input Level_____% **Output Level**_____% **Vertex 3: Input Level**_____% **Output Level**_____%

Vertex 2: Input Level_____% **Output Level**_____% **Vertex 4: Input Level**_____% **Output Level**_____%

GTN 6XX/7XX PART 23 CONFIGURATION LOG – GTN #1 - CONTINUED

GTN SETUP MENU - CONTINUED

AUDIO CONFIGURATION

Alert Volume Level: _____%

VOICE COMMAND CONFIGURATION

Voice Commands: ❑ Off ❑On **Mute Tone:** ☒Off **"Say…" Commands:** ❑ Off ❑On

TRAFFIC CONFIGURATION

Traffic Intruder Symbol Color: ❑ Cyan ❑ White **GTN Control of Traffic System:** ❑ Yes ❑ No

TCAS Display Output: ❑ Format 1 ❑ Format 2 **Select TCAS Controller Range Set:** _____

MAIN SYSTEM CONFIGURATION

Airframe Type: ❑ Fixed-Wing ❑ Rotorcraft

Air/Ground Threshold: _____KT

Air/Ground Discrete: ❑ Active for Airborne
❑ Active for Ground

GPS Antenna Height Above Ground: _____**FT**

Fuel Type: ❑ AV Gas ❑ Jet A ❑ Jet B

Synchro Heading Input: ❑ Connected
❑ Not Connected

GPS Select: ❑ Auto ❑ Prompt

Heading Source Input: ❑ Connected
❑ Not Connected

Altitude Source Input: ❑ Connected ❑ Not Connected

Enhanced Lighting Mode: ❑ Enabled ❑ Disabled

Pilot Position: ❑ Right ❑ Left

Crossfill Status Alert: ❑ Enabled ❑ Disabled
(Crossfill Status Alert not approved under this STC)

System ID: ❑ GTN 1 ❑ GTN 2

Database SYNC: ❑ Pilot Control ❑ Enabled ❑ Disabled

Airspace Labels: ❑ Enabled ❑ Disabled

Checklist Page Title: ❑Checklist ❑ Task List

Blackout Mode: ❑ Enabled ❑ Disabled

External Flight Plan: ❑ Enabled ❑ Disabled

Remote Database Confirmation: ❑ Enabled ❑ Disabled

Radio Altimeter Input: ❑ Connected ❑ Not Connected
(Radio Altimeter not approved under this STC)

COM CONFIGURATION (GTN 635/650/750 ONLY)

COM Radio: ❑Enabled ❑Disabled

RX Squelch Mode: ❑ Basic ❑ Advanced
❑ Spacing ❑ Squelch

COM RX Squelch: _____ %

MIC 1 Gain: _____dB

Sidetone Source: ❑ External ❑ Internal

Sidetone Volume: _____dB

Sidetone Pilot Control: ❑ Enabled ❑ Disabled

VOR/LOC/GS CONFIGURATION (GTN 650/750 ONLY)

NAV Radio: ❑ Enabled ❑ Disabled

ARINC 429 TX Speed: ❑ High ❑ Low

ARINC 429 SDI: ❑ Common ❑ VOR/ILS 1 ❑ VOR/ILS 2

DME Mode: ❑ Standby
❑ Directed Freq. 1 ❑ Directed Freq. 2

DME Channel Mode: _____

Filtered LOC/GS: ❑ Enabled ❑ Disabled
(Filtered LOC/GS not approved per this STC)

NAV Radio Display Timeout: ❑ Enabled ❑ Disabled

GTN 6XX/7XX PART 23 CONFIGURATION LOG – GTN #1 - CONTINUED

GTN SETUP MENU - CONTINUED

ARINC 453/708 CONFIGURATION

Port 1: External Weather Radar: ❑ Off ❑ On **Device:** _____

DISCRETES CONFIGURATION

J1001-16: _____	**J1001-52:** VLOC Annunciate
J1001-36: _____	**J1001-53:** _____
J1001-37: _____	**J1001-54:** _____
J1001-38: _____	**J1001-55:** _____
J1001-39: _____	**J1001-56:** ILS/GPS Approach Annunciate
J1002-01: Demo Mode Select	**J1001-57:** _____
J1002-10: _____	**J1001-71:** _____
J1002-11: _____	**J1001-72:** _____
J1005-33*: Synchro Valid - Low	**J1001-73:** _____
J1005-53*: Do Not Use	**J1001-74:** _____
J1005-54*: Synchro Valid - High	**J1001-75:** _____
J1001-14: _____	**J1002-76:** _____
J1001-15: GPS Annunciate	**J1002-03:** _____
J1001-33: _____	**J1002-12:** _____
J1001-34: _____	**J1005-13*:** _____
J1001-35: _____	**J1005-34***: _____

*Available only on GTN 725/750 units.

NAVIGATION FEATURES

Mark on Target: ❑ Enabled ❑ Disabled
(Mark on Target not approved under this STC)

RF Procedure Legs: ❑ Enabled ❑ Disabled

VERTICAL NAVIGATION

Vertical Navigation Type: ❑ VCALC ❑ VNAV **Transition Altitude:** _____

Transition to Approach: ❑ Enabled ❑ Disabled **VDI Scale:** ❑ 500 FT ❑ 1000 FT

OWNSHIP CONFIGURATION

Ownship Configuration: _____
(Selection of ownship color magenta is not covered under this STC)

FLIGHT STREAM

Stream Active Flight Data: ❑ Enabled ❑ Disabled **Transfer Past FD Logs:** ❑ Enabled ❑ Disabled

GTN 6XX/7XX PART 23 CONFIGURATION LOG – GTN #1 - CONTINUED

GTN OPTIONS MENU

TERRAIN CONFIGURATION

Terrain Mode: ❑Terrain Proximity ❑TAWS A ❑TAWS B ❑ Terrain Alerting
(TAWS A is not approved under this STC)

TAWS Audio Clips

NCR Caution: ❑ "Don't Sink"
❑ "Too Low Terrain"

EDR Caution: ❑ "Sink Rate"

PDA Caution: ❑ "Too Low Terrain"

IOI Caution: ❑ "Obstacle Ahead" x2
❑ "Caution Obstacle" x2

ROC Caution: ❑ "Obstacle Ahead" x2
❑ "Caution Obstacle" x2

ILI Caution: ❑ "Wire Ahead" x2
❑ "Caution Wire" x2

RLC Caution: ❑ "Wire Ahead" x2
❑ "Caution Wire" x2

ITI Caution: ❑ "Terrain Ahead" x2
❑ "Caution Terrain" x2

RTC Caution: ❑ "Terrain Ahead" x2
❑ "Caution Terrain" x2

IOI Warning: ❑ "Obstacle Ahead Pull Up" x2
❑ "Obstacle" x2 "Pull Up" x2

ROC Warning: ❑ "Obstacle Ahead Pull Up" x2
❑ "Obstacle" x2 "Pull Up" x2

ILI Warning: ❑ "Wire Ahead Pull Up" x2
❑ "Wire" x2 "Pull Up" x2

RLC Warning: ❑ "Wire Ahead Pull Up" x2
❑ "Wire" x2 "Pull Up" x2

ITI Warning: ❑ "Terrain Ahead Pull Up" x2
❑ "Terrain" x2 "Pull Up" x2

RTC Warning: ❑ "Terrain Ahead Pull Up" x2
❑ "Terrain" x2 "Pull Up" x2

EDR Warning: ❑ "Pull Up"

500 FT: ❑ "Five Hundred"

Terrain Alert Settings

Runway Surface: ❑ Any ❑ Hard Only ❑ Hard/Soft ❑ Water

Minimum Runway Length: _____ FT

Alert Voice: ❑ Female ❑ Male

CHARTS

Charts Configured: ❑ None ❑ FliteCharts ❑ ChartView

COM TRANSMIT POWER

Com Transmit Power: ❑ Normal ❑ 16W

GTN 6XX/7XX PART 23 CONFIGURATION LOG – GTN #1 – CONTINUED

GTN OPTIONS MENU - CONTINUED

WEATHER RADAR

Digital Radar: ❑ N/A ❑ Enabled

Turbulence Detection: ❑ N/A ❑ Enabled

Ground Clutter Suppression: ❑ N/A ❑ Enabled

FLIGHT SIMULATOR

Flight Simulator: ❑ N/A ❑ Enabled
*(Flight **Simulator is not approved under this STC)***

SEARCH AND RESCUE

Search and Rescue: ❑ N/A ❑ Enabled

SAR Patterns

Parallel Track: ❑ N/A ❑ Enabled

Sector Search: ❑ N/A ❑ Enabled

Expanding Square: ❑ N/A ❑ Enabled

Orbit: ❑ N/A ❑ Enabled

GTN 6XX/7XX PART 23 CONFIGURATION LOG – GTN #1 – CONTINUED

NOTES

GTN 6XX/7XX PART 23 CONFIGURATION LOG – GTN #2

SYSTEM INFORMATION

GTN SOFTWARE VERSIONS

Main Board

Software:_____ Boot Code:_____ FPGA: _____

Touch Controller Board

Software:_____ Boot Code: _____

GPS/WAAS Board

Software: _____

NAV Board ❑ [N/A]

Software:_____ Boot Code:_____ FPGA: _____

COM Board ❑ [N/A]

Software:_____ Boot Code:_____ FPGA: _____

GTN SETUP MENU

ARINC 429 CONFIGURATION

In 1: ❑ High ❑ Low_____ **Out 1:** ❑ High ❑ Low _____

In 2: ❑ High ❑ Low_____ **Out 2:** ❑ High ❑ Low _____

In 3: ❑ High ❑ Low_____ **Out 3:** ❑ High ❑ Low _____

In 4: ❑ High ❑ Low_____ **SDI:** ❑ Common ❑ LNAV 1 ❑ LNAV 2

RS-232 CONFIGURATION

In 1:_____ **Out 1:** _____

In 2:_____ **Out 2:** _____

In 3:_____ **Out 3:** _____

In 4:_____ **Out 4:** _____

In 5:_____ **Out 5:** _____

In 6:_____ **Out 6:** _____

MORE RS-232 SETUP

Forward ALT to GTX ❑Enabled ❑Disabled

This setting is only available if a transponder is configured on a RS-232 port.

GTN 6XX/7XX PART 23 CONFIGURATION LOG – GTN #2 - CONTINUED

GTN SETUP MENU - CONTINUED

HSDB (ETHERNET) CONFIGURATION

Port 1: ❑ Connected ❑ Not Connected **Port 3:** ❑ Connected ❑ Not Connected

Port 2: ❑ Connected ❑ Not Connected **Port 4:** ❑ Connected ❑ Not Connected

INTERFACED EQUIPMENT CONFIGURATION

Cross-Side Navigator: ❑ Present ❑ Not Present Type:_____

GDL 69/69A: ❑ Present ❑ Not Present Type:_____

GDL 88/88D: ❑ Present ❑ Not Present Type:_____

ADS-B In Source: ❑ Present ❑ Not Present Type:_____

GDU #1: ❑ Present ❑ Not Present Type:_____

GDU #2: ❑ Present ❑ Not Present Type:_____

GDU #3: ❑ Present ❑ Not Present Type:_____

GDU #4: ❑ Present ❑ Not Present Type:_____

Transponder #1: ❑ Present ❑ Not Present Type:_____

Transponder #2: ❑ Present ❑ Not Present Type:_____

GSR 56: ❑ Present ❑ Not Present

GWX: ❑ Present ❑ Not Present Type:_____

MAIN INDICATOR (ANALOG) CONFIGURATION

CDI Key: ❑ Enabled ❑ Disabled **Selected Course for VLOC:** ❑ Allowed ❑Ignored

Selected Course for GPS: ❑ Allowed ❑Ignored **V-Flag State:** ❑Normal ❑Declutter

LIGHTING CONFIGURATION (IF ENHANCED LIGHTING IS DISABLED)

Lighting Configuration: ❑**[N/A]**

Display Source: ❑Photocell ❑Lighting Bus 1 **Keys Source:** ❑Photocell ❑Lighting Bus 1 ❑Lighting Bus 2

Display Minimum Level:_____% **Keys Minimum Level:**_____%

Configure Photocell: ❑**[N/A]**

Response Time:_____ sec **Slope:**_____ **Offset**: _____

Photocell Override

Key Backlight Cutoff:_____% **Photocell Transition**: _____

Configure Lighting Bus: ❑**[N/A]**

Lighting Bus 1: ❑14 VDC ❑28 VDC ❑5 VDC ❑ 5VAC

Response Time:_____ sec **Slope:**_____ **Offset:**_____

Lighting Bus 2: ❑**[N/A]** ❑14 VDC ❑28 VDC ❑5 VDC ❑ 5VAC

Response Time:_____ sec **Slope:**_____ **Offset:**_____

GTN 6XX/7XX PART 23 CONFIGURATION LOG – GTN #2 - CONTINUED

GTN SETUP MENU - CONTINUED

ENHANCED LIGHTING CONFIGURATION
(IF ENABLED ON MAIN SYSTEM CONFIGURATION PAGE)

ENHANCED LIGHTING: ❑ **[N/A]**

SOURCE SETTINGS

Display Source: ❑ Photocell ❑ Lighting Bus 1 **Keys Source:** ❑ Photocell ❑ Lighting Bus 1 ❑ Lighting Bus 2

Photocell: Response Time:_____sec

Lighting Bus 1: ❑ **[N/A]** Input Type: ❑ 14 VDC ❑ 28 VDC ❑ 5 VDC ❑ 5VAC Response Time:_____sec

Lighting Bus 2: ❑ **[N/A]** Input Type: ❑ 14 VDC ❑ 28 VDC ❑ 5 VDC ❑ 5VAC Response Time:_____sec

DAY MODE OPERATION

Photocell Transition:_____% **Key Backlight Cutoff:**_____%

DISPLAY

Minimum Level:_____% **Maximum Level:**_____%

Configure Curve

Vertex 1: Input Level_____% **Output Level**_____% **Vertex 3: Input Level**_____% **Output Level**_____%

Vertex 2: Input Level_____% **Output Level**_____% **Vertex 4: Input Level**_____% **Output Level**_____%

KEYS

Minimum Level:_____% **Maximum Level:**_____%

Configure Curve

Vertex 1: Input Level_____% **Output Level**_____% **Vertex 3: Input Level**_____% **Output Level**_____%

Vertex 2: Input Level_____% **Output Level**_____% **Vertex 4: Input Level**_____% **Output Level**_____%

NIGHT MODE OPERATION ❑ **[N/A]**

Photocell Transition:_____% **Key Backlight Cutoff:**_____%

DISPLAY

Minimum Level:_____% **Maximum Level:**_____%

Configure Curve

Vertex 1: Input Level_____% **Output Level**_____% **Vertex 3: Input Level**_____% **Output Level**_____%

Vertex 2: Input Level_____% **Output Level**_____% **Vertex 4: Input Level**_____% **Output Level**_____%

KEYS

Minimum Level:_____% **Maximum Level:**_____%

Configure Curve

Vertex 1: Input Level_____% **Output Level**_____% **Vertex 3: Input Level**_____% **Output Level**_____%

Vertex 2: Input Level_____% **Output Level**_____% **Vertex 4: Input Level**_____% **Output Level**_____%

GTN 6XX/7XX PART 23 CONFIGURATION LOG – GTN #2 - CONTINUED

GTN SETUP MENU - CONTINUED

AUDIO CONFIGURATION

Alert Volume Level:_____%

VOICE COMMAND CONFIGURATION

Voice Commands: ❑ Off ❑On **Mute Tone:** ❑ Off **"Say…" Commands:** ❑ Off ❑On

TRAFFIC CONFIGURATION

Traffic Intruder Symbol Color: ❑ Cyan ❑ White **GTN Control of Traffic System:** ❑ Yes ❑ No

TCAS Display Output: ❑ Format 1 ❑ Format 2 **Select TCAS Controller Range Set:** _____

MAIN SYSTEM CONFIGURATION

Airframe Type: ❑ Fixed-Wing ❑ Rotorcraft

Air/Ground Threshold:_____KT

Air/Ground Discrete: ❑ Active for Airborne
❑ Active for Ground

GPS Antenna Height Above Ground:_____**FT**

Fuel Type: ❑ AV Gas ❑ Jet A ❑ Jet B

Synchro Heading Input: ❑ Connected
❑ Not Connected

GPS Select: ❑ Auto ❑ Prompt

Heading Source Input: ❑ Connected
❑ Not Connected

Altitude Source Input: ❑ Connected ❑ Not Connected

Enhanced Lighting Mode: ❑ Enabled ❑ Disabled

Pilot Position: ❑ Right ❑ Left

Crossfill Status Alert: ❑ Enabled ❑ Disabled
(Crossfill Status Alert not approved under this STC)

System ID: ❑ GTN 1 ❑ GTN 2

Database SYNC: ❑ Pilot Control ❑ Enabled ❑ Disabled

Airspace Labels: ❑ Enabled ❑ Disabled

Checklist Page Title: ❑Checklist ❑ Task List

Blackout Mode: ❑ Enabled ❑ Disabled

External Flight Plan: ❑ Enabled ❑ Disabled

Remote Database Confirmation: ❑ Enabled ❑ Disabled

Radio Altimeter Input: ❑ Connected ❑ Not Connected
(Radio Altimeter not approved under this STC)

COM CONFIGURATION (GTN 635/650/750 ONLY)

COM Radio: ❑Enabled ❑Disabled

RX Squelch Mode: ❑ Basic ❑ Advanced
❑ Spacing ❑ Squelch

COM RX Squelch:_____ %

MIC 1 Gain: _____dB

Sidetone Source: ❑ External ❑ Internal

Sidetone Volume:_____dB

Sidetone Pilot Control: ❑ Enabled ❑ Disabled

VOR/LOC/GS CONFIGURATION (GTN 650/750 ONLY)

NAV Radio: ❑ Enabled ❑ Disabled

ARINC 429 TX Speed: ❑ High ❑ Low

ARINC 429 SDI: ❑ Common ❑ VOR/ILS 1 ❑ VOR/ILS 2

DME Mode: ❑ Standby
❑ Directed Freq. 1 ❑ Directed Freq. 2

DME Channel Mode: _____

Filtered LOC/GS: ❑ Enabled ❑ Disabled
(Filtered LOC/GS not approved per this STC)

NAV Radio Display Timeout: ❑ Enabled ❑ Disabled

GTN 6XX/7XX PART 23 CONFIGURATION LOG – GTN #2 - CONTINUED

GTN SETUP MENU - CONTINUED

ARINC 453/708 CONFIGURATION

Port 1: External Weather Radar: ❑ Off ❑ On **Device:** _____

DISCRETES CONFIGURATION

J1001-16: _____	**J1001-52:** VLOC Annunciate
J1001-36: _____	**J1001-53:** _____
J1001-37: _____	**J1001-54:** _____
J1001-38: _____	**J1001-55:** _____
J1001-39: _____	**J1001-56:** ILS/GPS Approach Annunciate
J1002-01: Demo Mode Select	**J1001-57:** _____
J1002-10: _____	**J1001-71:** _____
J1002-11: _____	**J1001-72:** _____
J1005-33*: Synchro Valid - Low	**J1001-73:** _____
J1005-53*: Do Not Use	**J1001-74:** _____
J1005-54*: Synchro Valid - High	**J1001-75:** _____
J1001-14: _____	**J1002-76:** _____
J1001-15: GPS Annunciate	**J1002-03:** _____
J1001-33: _____	**J1002-12:** _____
J1001-34: _____	**J1005-13*:** _____
J1001-35: _____	**J1005-34***: _____

*Available only on GTN 725/750 units.

NAVIGATION FEATURES

Mark on Target: ❑ Enabled ❑ Disabled
(Mark on Target not approved under this STC)

RF Procedure Legs: ❑ Enabled ❑ Disabled

VERTICAL NAVIGATION

Vertical Navigation Type: ❑ VCALC ❑ VNAV **Transition Altitude:** _____

Transition to Approach: ❑ Enabled ❑ Disabled **VDI Scale:** ❑ 500 FT ❑ 1000 FT

OWNSHIP CONFIGURATION

Ownship Configuration: _____
(Selection of ownship color magenta is not covered under this STC)

FLIGHT STREAM

Stream Active Flight Data: ❑ Enabled ❑ Disabled **Transfer Past FD Logs:** ❑ Enabled ❑ Disabled

GTN 6XX/7XX PART 23 CONFIGURATION LOG – GTN #2 - CONTINUED

GTN OPTIONS MENU

TERRAIN CONFIGURATION

Terrain Mode: ❑Terrain Proximity ❑TAWS A ❑TAWS B ❑ Terrain Alerting
(TAWS A is not approved under this STC)

TAWS Audio Clips

NCR Caution: ❑ "Don't Sink"
❑ "Too Low Terrain"

EDR Caution: ❑ "Sink Rate"

PDA Caution: ❑ "Too Low Terrain"

IOI Caution: ❑ "Obstacle Ahead" x2
❑ "Caution Obstacle" x2

ROC Caution: ❑ "Obstacle Ahead" x2
❑ "Caution Obstacle" x2

ILI Caution: ❑ "Wire Ahead" x2
❑ "Caution Wire" x2

RLC Caution: ❑ "Wire Ahead" x2
❑ "Caution Wire" x2

ITI Caution: ❑ "Terrain Ahead" x2
❑ "Caution Terrain" x2

RTC Caution: ❑ "Terrain Ahead" x2
❑ "Caution Terrain" x2

IOI Warning: ❑ "Obstacle Ahead Pull Up" x2
❑ "Obstacle" x2 "Pull Up" x2

ROC Warning: ❑ "Obstacle Ahead Pull Up" x2
❑ "Obstacle" x2 "Pull Up" x2

ILI Warning: ❑ "Wire Ahead Pull Up" x2
❑ "Wire" x2 "Pull Up" x2

RLC Warning: ❑ "Wire Ahead Pull Up" x2
❑ "Wire" x2 "Pull Up" x2

ITI Warning: ❑ "Terrain Ahead Pull Up" x2
❑ "Terrain" x2 "Pull Up" x2

RTC Warning: ❑ "Terrain Ahead Pull Up" x2
❑ "Terrain" x2 "Pull Up" x2

EDR Warning: ❑ "Pull Up"

500 FT: ❑ "Five Hundred"

Terrain Alert Settings

Runway Surface: ❑ Any ❑Hard Only ❑ Hard/Soft ❑ Water

Minimum Runway Length: _____ FT

Alert Voice: ❑ Female ❑ Male

CHARTS

Charts Configured: ❑ None ❑ FliteCharts ❑ ChartView

COM TRANSMIT POWER

Com Transmit Power: ❑ Normal ❑ 16W

GTN 6XX/7XX PART 23 CONFIGURATION LOG – GTN #2 – CONTINUED

GTN OPTIONS MENU - CONTINUED

WEATHER RADAR

Digital Radar: ❑ N/A ❑ Enabled

Turbulence Detection: ❑ N/A ❑ Enabled

Ground Clutter Suppression: ❑ N/A ❑ Enabled

FLIGHT SIMULATOR

Flight Simulator: ❑ N/A ❑ Enabled

(Flight Simulator is not approved under this STC)

SEARCH AND RESCUE

Search and Rescue: ❑ N/A ❑ Enabled

SAR Patterns

Parallel Track: ❑ N/A ❑ Enabled

Sector Search: ❑ N/A ❑ Enabled

Expanding Square: ❑ N/A ❑ Enabled

Orbit: ❑ N/A ❑ Enabled

GTN 6XX/7XX PART 23 CONFIGURATION LOG – GTN #2 – CONTINUED

NOTES

GTN 6XX/7XX PART 23 CONFIGURATION LOG

GMA 35 AUDIO PANEL CONFIGURATION ❑ [N/A] Software Version:_____

AUDIO PANEL CONFIGURATION

INTERCOM

Mute PASS to CREW intercom during alerts	❑ True ❑ False
Mute PASS to CREW intercom during selected audio	❑ True ❑ False
Passengers hear selected audio	❑ True ❑ False
Receiver 5 is Passenger	❑ True ❑ False

PASSENGER ADDRESS

Disable PA functionality	❑ True ❑ False

MUSIC

Mute PASS music during intercom	❑ True ❑ False

ALERTS

Passengers hear alerts	❑ True ❑ False

SECONDARY RADIOS

Mute secondary radios on primary radio reception	❑ True ❑ False

SIDETONE

Audio Processor generates COM1 internal sidetone	❑ True ❑ False
Audio Processor generates COM2 internal sidetone	❑ True ❑ False
Audio Processor generates COM3 internal sidetone	❑ True ❑ False

COM 1/2 CONNECTIONS

COM 1 is connected as COM 2	❑ True ❑ False

SPEAKER

Ambient Noise Mic On	❑ True ❑ False

HEADSET

Ambient Noise Mic On	❑ True ❑ False

INPUT VOLUME

Alert 1 input audio volume	_____dB	Music 1	_____dB
Alert 2 input audio volume	_____dB	Music 2	_____dB
Alert 3 input audio volume	_____dB	Telephone	_____dB
Alert 4 input audio volume	_____dB	Text to Speech (TTS)	_____dB
Failsafe Warn input audio volume	_____dB	Bluetooth Audio	_____dB
Marker volume	_____dB	Bluetooth Telephone	_____dB
		Audio Clips	_____dB

SPEAKER VOLUME

Pilot PA_____dB Copilot PA_____dB Crew Audio_____dB Alert Audio Sum_____dB

SQUELCH THRESHOLD

COM1_____dB	NAV1_____dB	RCVR4_____dB	ALERT1_____dB
COM2_____dB	NAV2_____dB	RCVR5_____dB	ALERT2_____dB
COM3_____dB	RCVR3_____dB	WARN1_____dB	ALERT3_____dB
			ALERT4_____dB

OTHER

Marker Beacon high sense threshold_____dB

Marker Beacon low sense threshold_____dB

Marker external lamp lighting offset_____dB

GTN 6XX/7XX PART 23 CONFIGURATION LOG

GMA 35 AUDIO PANEL CONFIGURATION – CONTINUED

AUDIO PANEL DISCRETES

J3501-16: _____

J3502-14: _____

J3502-30: _____

AUDIO PANEL CONNECTED RADIOS

COM 2:	❑ Present	❑ Not Present	
COM 3:	❑ Present	❑ Not Present	
NAV 1:	❑ Present	❑ Not Present	
NAV 2:	❑ Present	❑ Not Present	
RCVR 3:	❑ Present	❑ Not Present	Type: _____
RCVR 4:	❑ Present	❑ Not Present	Type: _____
RCVR 5:	❑ Present	❑ Not Present	Type: _____
TEL:	❑ Present	❑ Not Present	
MUSIC 1:	❑ Present	❑ Not Present	
MUSIC 2:	❑ Present	❑ Not Present	
MARKER BEACON:	❑ Present	❑ Not Present	

Wire Routing

Single Engine

The following diagram depicts approximate location of all LRUs and antenna(s) along with the wire routing for the GTN, GMA 35, and Flight Stream 210 throughout the aircraft structure for a single-engine aircraft.

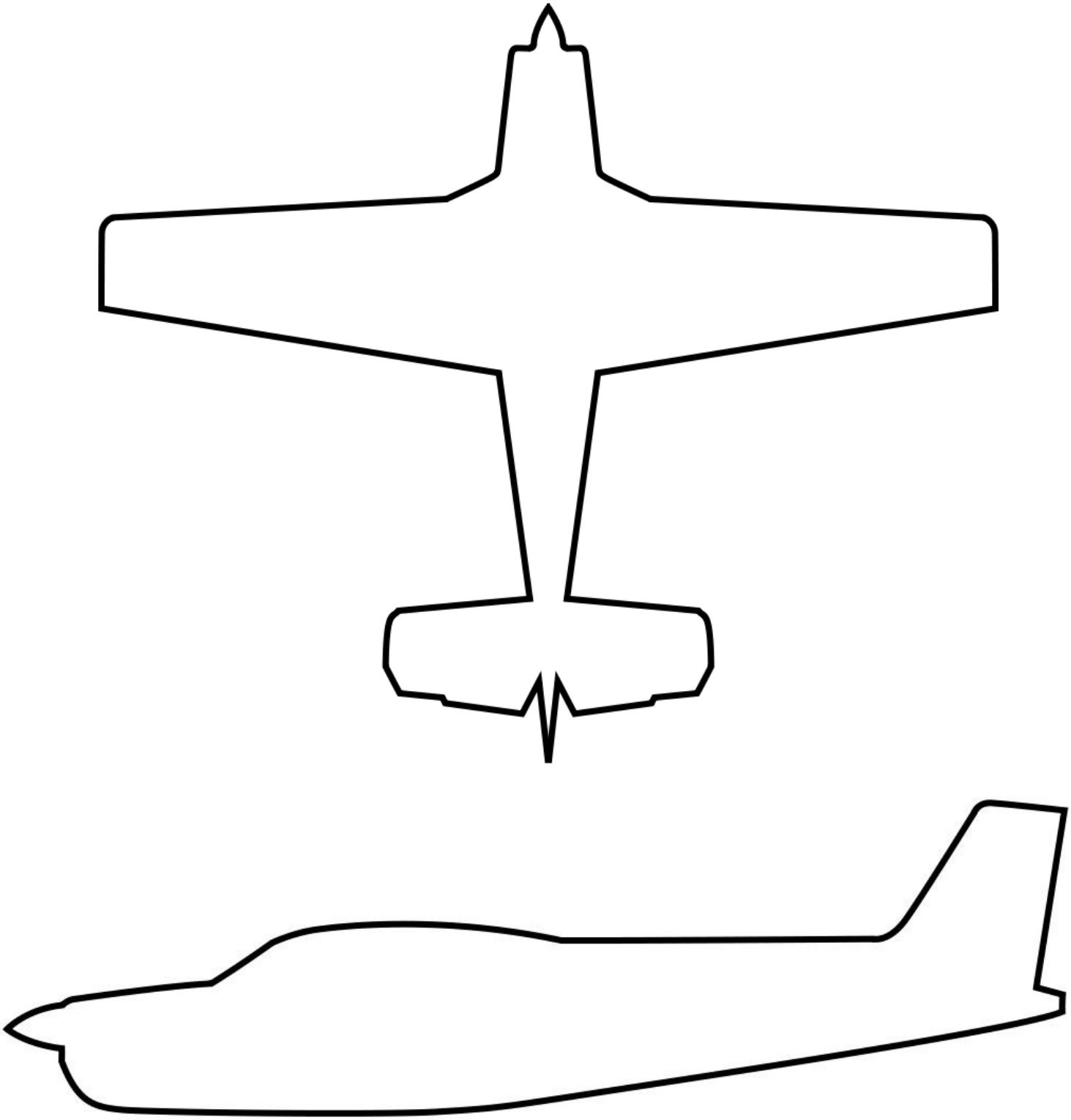

Twin Engine

The following diagram depicts approximate location of all LRUs and antenna(s) along with the wire routing for the GTN, GMA 35, and Flight Stream 210 throughout the aircraft structure for a twin-engine aircraft.

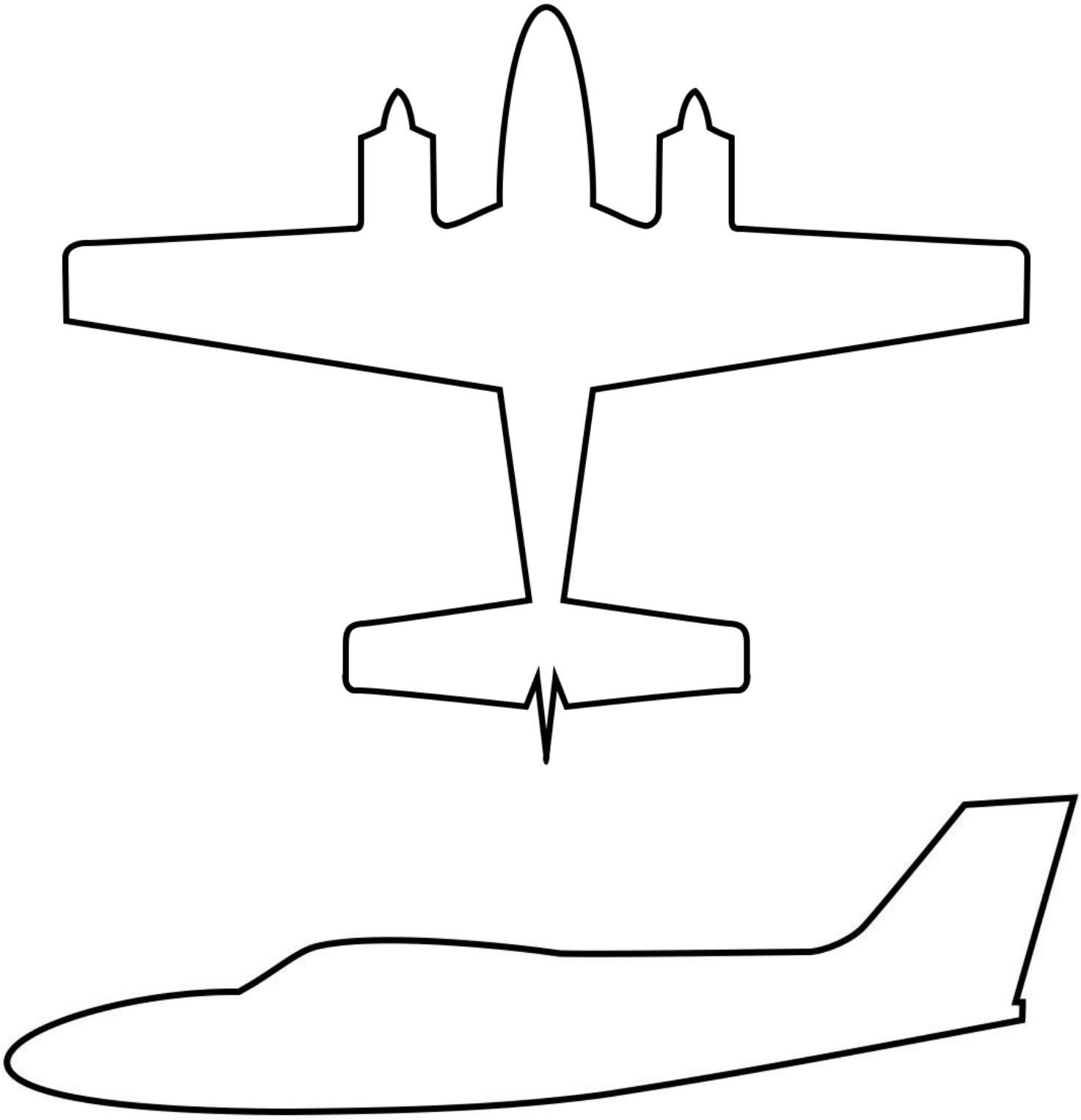

Aircraft Wiring Diagrams

Attach the aircraft wiring diagrams showing the equipment installed by this STC or a markup of the interconnect diagrams from the STC installation manual detailing which equipment was installed and how it was connected.

NOTE

Electrical loads for equipment installed by this STC are listed in GTN 6XX/7XX Part 23 AML STC Installation Manual.

Check all that apply and add a brief description of the location.

SPLITTER

Included in Installation: ❑Yes ❑No

Description of Location:

DIPLEXER

Included in Installation: ❑Yes ❑No

Description of Location:

Equipment Interfaced to the GTN 6XX/7XX

The purpose of the GTN Interfaced Equipment Lists (GTN #1 and GTN #2 (if applicable)) is to document the equipment that is interfaced to the GTN. Use the following guidance when filling out these tables:

- **Installed?**: Check “Yes” if the equipment is installed in the aircraft and interfaced to the GTN. If the equipment is not installed in the aircraft, check “No.” If the equipment is installed in the aircraft but not interfaced to the GTN, check “No.”
- **Model(s)**: Enter the model number or numbers of the equipment that is interfaced to the GTN.
- **Interface(s)**: Enter the type of interface used to connect to the GTN.
- **GTN Port Numbers**: When applicable, enter the GTN port number or numbers used for the interface. This column is generally applicable only to serial ports such as RS-232 and ARINC 429.
- **Covered by GTN 6XX/7XX Part 23 AML STC Installation Manual?**: Refer to Section 3. Check “Yes” if the equipment is listed in Appendix C of *GTN 6XX/7XX Part 23 AML STC Installation Manual*. Check “No” if the equipment is not listed in Appendix C of *GTN 6XX/7XX Part 23 AML STC Installation Manual*.

NOTE

This information is optional and is not required to be completed or maintained with the aircraft records.

GTN #1 Interfaced Equipment List

Equipment Type

COM Antenna
Installed: ❑Yes ❑No

NAV Antenna
Installed: ❑Yes ❑No

AUDIO PANEL

Installed: ❑Yes ❑No

Model(s): _____

Interface(s) (Analog, RS-232, ARINC 429, etc.): _____

GTN Port Number(s) (if applicable): _____

Covered by GTN STC Installation Manual? ❑ Yes ❑No

AIR DATA COMPUTER(S)

Installed: ❑Yes ❑No

Model(s): _____

Interface(s) (Analog, RS-232, ARINC 429, etc.): _____

GTN Port Number(s) (if applicable): _____

Covered by GTN STC Installation Manual? ❑ Yes ❑No

ALTITUDE SERIALIZER OR FUEL/AIR DATA

Installed: ❑Yes ❑No

Model(s): _____

Interface(s) (Analog, RS-232, ARINC 429, etc.): _____

GTN Port Number(s) (if applicable): _____

Covered by GTN STC Installation Manual? ❑ Yes ❑No

AUTOPILOT

Installed: ❑Yes ❑No

Model(s): _____

Interface(s) (Analog, RS-232, ARINC 429, etc.): _____

GTN Port Number(s) (if applicable): _____

Covered by GTN STC Installation Manual? ❑ Yes ❑No

GTN #1 Interfaced Equipment List - CONTINUED

AUTOPILOT ROLL STEERING CONVERTER

Installed: ❑Yes ❑No

Model(s): _____

Interface(s) (Analog, RS-232, ARINC 429, etc.): _____

GTN Port Number(s) (if applicable): _____

Covered by GTN STC Installation Manual? ❑ Yes ❑No

EFIS DISPLAY(S)

Installed: ❑Yes ❑No

Model(s): _____

Interface(s) (Analog, RS-232, ARINC 429, etc.): _____

GTN Port Number(s) (if applicable): _____

Covered by GTN STC Installation Manual? ❑ Yes ❑No

EHSI(S)

Installed: ❑Yes ❑No

Model(s): _____

Interface(s) (Analog, RS-232, ARINC 429, etc.): _____

GTN Port Number(s) (if applicable): _____

Covered by GTN STC Installation Manual? ❑ Yes ❑No

GSR 56

Installed: ❑Yes ❑No

Model(s): _____

Interface(s) (Analog, RS-232, ARINC 429, etc.): _____

GTN Port Number(s) (if applicable): _____

Covered by GTN STC Installation Manual? ❑ Yes ❑No

GTN #1 Interfaced Equipment List - CONTINUED

GDL 88

Installed: ❑Yes ❑No

Model(s): _____

Interface(s) (Analog, RS-232, ARINC 429, etc.): _____

GTN Port Number(s) (if applicable): _____

Covered by GTN STC Installation Manual? ❑ Yes ❑No

IRU/AHRS UNIT(S)

Installed: ❑Yes ❑No

Model(s): _____

Interface(s) (Analog, RS-232, ARINC 429, etc.): _____

GTN Port Number(s) (if applicable): _____

Covered by GTN STC Installation Manual? ❑ Yes ❑No

TRANSPONDER(S)

Installed: ❑Yes ❑No

Model(s): _____

Interface(s) (Analog, RS-232, ARINC 429, etc.): _____

GTN Port Number(s) (if applicable): _____

Covered by GTN STC Installation Manual? ❑ Yes ❑No

NAV INDICATORS

Installed: ❑Yes ❑No

Model(s): _____

Interface(s) (Analog, RS-232, ARINC 429, etc.): _____

GTN Port Number(s) (if applicable): _____

Covered by GTN STC Installation Manual? ❑ Yes ❑No

GTN #1 Interfaced Equipment List - CONTINUED

TRAFFIC SOURCE

Installed: ❑Yes ❑No

Model(s): _____

Interface(s) (Analog, RS-232, ARINC 429, etc.): _____

GTN Port Number(s) (if applicable): _____

Covered by GTN STC Installation Manual? ❑ Yes ❑No

TAWS (EXTERNAL TO GTN)

Installed: ❑Yes ❑No

Model(s): _____

Interface(s) (Analog, RS-232, ARINC 429, etc.): _____

GTN Port Number(s) (if applicable): _____

Covered by GTN STC Installation Manual? ❑ Yes ❑No

WEATHER SOURCE: WX-500 STORMSCOPE Installed:

❑Yes ❑No

Model(s): _____

Interface(s) (Analog, RS-232, ARINC 429, etc.): _____

GTN Port Number(s) (if applicable): _____

Covered by GTN STC Installation Manual? ❑ Yes ❑No

WEATHER SOURCE: GDL 69/69A

Installed: ❑Yes ❑No

Model(s): _____

Interface(s) (Analog, RS-232, ARINC 429, etc.): _____

GTN Port Number(s) (if applicable): _____

Covered by GTN STC Installation Manual? ❑ Yes ❑No

GTN #1 Interfaced Equipment List - CONTINUED

DME

Installed: ❑Yes ❑No

Model(s): _____

Interface(s) (Analog, RS-232, ARINC 429, etc.): _____

GTN Port Number(s) (if applicable): _____

Covered by GTN STC Installation Manual? ❑ Yes ❑No

CDI/HSI SOURCE SELECTION ANNUNCIATOR

Installed: ❑Yes ❑No

Model(s): _____

Interface(s) (Analog, RS-232, ARINC 429, etc.): _____

GTN Port Number(s) (if applicable): _____

Covered by GTN STC Installation Manual? ❑ Yes ❑No

TAWS ANNUNCIATOR PANEL

Installed: ❑Yes ❑No

Model(s): _____

Interface(s) (Analog, RS-232, ARINC 429, etc.): _____

GTN Port Number(s) (if applicable): _____

Covered by GTN STC Installation Manual? ❑ Yes ❑No

MULTIFUNCTION DISPLAY(S)

Installed: ❑Yes ❑No

Model(s): _____

Interface(s) (Analog, RS-232, ARINC 429, etc.): _____

GTN Port Number(s) (if applicable): _____

Covered by GTN STC Installation Manual? ❑ Yes ❑No

GTN #1 Interfaced Equipment List - CONTINUED

INTERFACE ADAPTER(S) (E.G., GAD 42)

Installed: ❑Yes ❑No

Model(s): _____

Interface(s) (Analog, RS-232, ARINC 429, etc.): _____

GTN Port Number(s) (if applicable): _____

Covered by GTN STC Installation Manual? ❑ Yes ❑No

SYNCHRO HEADING SOURCE

Installed: ❑Yes ❑No

Model(s): _____

Interface(s) (Analog, RS-232, ARINC 429, etc.): _____

GTN Port Number(s) (if applicable): _____

Covered by GTN STC Installation Manual? ❑ Yes ❑No

WEATHER RADAR

Installed: ❑Yes ❑No

Model(s): _____

Interface(s) (Analog, RS-232, ARINC 429, etc.): _____

GTN Port Number(s) (if applicable): _____

Covered by GTN STC Installation Manual? ❑ Yes ❑No

If a second GTN is not installed in the aircraft, check this box and do not fill out the following table.

❑ **[GTN #2 Not Installed]**

GTN #2 Interfaced Equipment

Equipment Type

COM Antenna Installed: ❑Yes ❑No

NAV Antenna Installed: ❑Yes ❑No

AUDIO PANEL

Installed: ❑Yes ❑No

Model(s): _____

Interface(s) (Analog, RS-232, ARINC 429, etc.): _____

GTN Port Number(s) (if applicable): _____

Covered by GTN STC Installation Manual? ❑ Yes ❑ No

AIR DATA COMPUTER(S)

Installed: ❑Yes ❑No

Model(s): _____

Interface(s) (Analog, RS-232, ARINC 429, etc.): _____

GTN Port Number(s) (if applicable): _____

Covered by GTN STC Installation Manual? ❑ Yes ❑No

ALTITUDE SERIALIZER OR FUEL/AIR DATA

Installed: ❑Yes ❑No

Model(s): _____

Interface(s) (Analog, RS-232, ARINC 429, etc.): _____

GTN Port Number(s) (if applicable): _____

Covered by GTN STC Installation Manual? ❑ Yes ❑No

AUTOPILOT

Installed: ❑Yes ❑No

Model(s): _____

Interface(s) (Analog, RS-232, ARINC 429, etc.): _____

GTN Port Number(s) (if applicable): _____

Covered by GTN STC Installation Manual? ❑ Yes ❑No

GTN #2 Interfaced Equipment - CONTINUED

AUTOPILOT ROLL STEERING CONVERTER

Installed: ❑Yes ❑No

Model(s): _____

Interface(s) (Analog, RS-232, ARINC 429, etc.): _____

GTN Port Number(s) (if applicable): _____

Covered by GTN STC Installation Manual? ❑ Yes ❑No

EFIS DISPLAY(s)

Installed: ❑Yes ❑No

Model(s): _____

Interface(s) (Analog, RS-232, ARINC 429, etc.): _____

GTN Port Number(s) (if applicable): _____

Covered by GTN STC Installation Manual? ❑ Yes ❑No

EHSI(s)

Installed: ❑Yes ❑No

Model(s): _____

Interface(s) (Analog, RS-232, ARINC 429, etc.): _____

GTN Port Number(s) (if applicable): _____

Covered by GTN STC Installation Manual? ❑ Yes ❑No

GSR 56

Installed: ❑Yes ❑No

Model(s): _____

Interface(s) (Analog, RS-232, ARINC 429, etc.): _____

GTN Port Number(s) (if applicable): _____

Covered by GTN STC Installation Manual? ❑ Yes ❑No

GTN #2 Interfaced Equipment - CONTINUED

GDL 88

Installed: ❑Yes ❑No

Model(s): _____

Interface(s) (Analog, RS-232, ARINC 429, etc.): _____

GTN Port Number(s) (if applicable): _____

Covered by GTN STC Installation Manual? ❑ Yes ❑No

IRU/AHRS UNIT(s)

Installed: ❑Yes ❑No

Model(s): _____

Interface(s) (Analog, RS-232, ARINC 429, etc.): _____

GTN Port Number(s) (if applicable): _____

Covered by GTN STC Installation Manual? ❑ Yes ❑No

TRANSPONDER(s)

Installed: ❑Yes ❑No

Model(s): _____

Interface(s) (Analog, RS-232, ARINC 429, etc.): _____

GTN Port Number(s) (if applicable): _____

Covered by GTN STC Installation Manual? ❑ Yes ❑No

NAV INDICATORS

Installed: ❑Yes ❑No

Model(s): _____

Interface(s) (Analog, RS-232, ARINC 429, etc.): _____

GTN Port Number(s) (if applicable): _____

Covered by GTN STC Installation Manual? ❑ Yes ❑No

GTN #2 Interfaced Equipment - CONTINUED

TRAFFIC SOURCE

Installed: ❑Yes ❑No

Model(s): _____

Interface(s) (Analog, RS-232, ARINC 429, etc.): _____

GTN Port Number(s) (if applicable): _____

Covered by GTN STC Installation Manual? ❑ Yes ❑No

TAWS (EXTERNAL TO GTN)

Installed: ❑Yes ❑No

Model(s): _____

Interface(s) (Analog, RS-232, ARINC 429, etc.): _____

GTN Port Number(s) (if applicable): _____

Covered by GTN STC Installation Manual? ❑ Yes ❑No

WEATHER SOURCE: WX-500 STORMSCOPE

Installed: ❑Yes ❑No

Model(s): _____

Interface(s) (Analog, RS-232, ARINC 429, etc.): _____

GTN Port Number(s) (if applicable): _____

Covered by GTN STC Installation Manual? ❑ Yes ❑No

WEATHER SOURCE: GDL 69/69A

Installed: ❑Yes ❑No

Model(s): _____

Interface(s) (Analog, RS-232, ARINC 429, etc.): _____

GTN Port Number(s) (if applicable): _____

Covered by GTN STC Installation Manual? ❑ Yes ❑No

GTN #2 Interfaced Equipment - CONTINUED

DME

Installed: ❑Yes ❑No

Model(s): _____

Interface(s) (Analog, RS-232, ARINC 429, etc.): _____

GTN Port Number(s) (if applicable): _____

Covered by GTN STC Installation Manual? ❑ Yes ❑No

CDI/HSI SOURCE SELECTION ANNUNCIATOR

Installed: ❑ Yes ❑ No

Model(s): _____

Interface(s) (Analog, RS-232, ARINC 429, etc.): _____

GTN Port Number(s) (if applicable): _____

Covered by GTN STC Installation Manual? ❑ Yes ❑No

TAWS ANNUNCIATOR PANEL

Installed: ❑Yes ❑No

Model(s): _____

Interface(s) (Analog, RS-232, ARINC 429, etc.): _____

GTN Port Number(s) (if applicable): _____

Covered by GTN STC Installation Manual? ❑ Yes ❑No

MULTIFUNCTION DISPLAY(s)

Installed: ❑Yes ❑No

Model(s): _____

Interface(s) (Analog, RS-232, ARINC 429, etc.): _____

GTN Port Number(s) (if applicable): _____

Covered by GTN STC Installation Manual? ❑ Yes ❑No

GTN #2 Interfaced Equipment - CONTINUED

INTERFACE ADAPTER(S) (E.G., GAD 42)

Installed: ❑Yes ❑No

Model(s): _____

Interface(s) (Analog, RS-232, ARINC 429, etc.): _____

GTN Port Number(s) (if applicable): _____

Covered by GTN STC Installation Manual? ❑ Yes ❑No

SYNCHRO HEADING SOURCE

Installed: ❑Yes ❑No

Model(s): _____

Interface(s) (Analog, RS-232, ARINC 429, etc.): _____

GTN Port Number(s) (if applicable): _____

Covered by GTN STC Installation Manual? ❑ Yes ❑No

WEATHER RADAR

Installed: ❑Yes ❑No

Model(s): _____

Interface(s) (Analog, RS-232, ARINC 429, etc.): _____

GTN Port Number(s) (if applicable): _____

Covered by GTN STC Installation Manual? ❑ Yes ❑No

Equipment Interfaced to the GMA 35

The purpose of the GMA 35 Interfaced Equipment List is to document the equipment that is interfaced to the GTN. Use the following guidance when filling out these tables:

- **Installed?**: Check "Yes" if the equipment is installed in the aircraft and interfaced to the GTN. If the equipment is not installed in the aircraft, check "No." If the equipment is installed in the aircraft but not interfaced to the GTN, check "No."
- **Model(s)**: Enter the model number or numbers of the equipment that is interfaced to the GTN.
- **Interface(s)**: Enter the type of interface used to connect to the GTN.

If a GMA 35 audio panel is not installed in the aircraft, check this box and do not fill out the following table.

❑ **[GMA 35 Not Installed]**

NOTE

This information is optional and is not required to be completed or maintained with the aircraft records.

Equipment Type

COM RADIO #1

Installed: ❑ Yes ❑ No

Model(s): _____

COM RADIO #2

Installed: ❑ Yes ❑ No

Model(s): _____

COM RADIO #3

Installed: ❑ Yes ❑ No

Model(s): _____

NAV RADIO #1

Installed: ❑ Yes ❑ No

Model(s): _____

NAV RADIO #2

Installed: ❑ Yes ❑ No

Model(s): _____

NAV RADIO #3

Installed: ❑ Yes ❑ No

Model(s): _____

NAV RADIO #4

Installed: ❑ Yes ❑ No

Model(s): _____

Marker Beacon Antenna

Installed: ❑ Yes ❑ No


GARMIN