GARMIN

GFC 500

Autopilot with Electronic Stability And Protection

Part 23 AML STC Maintenance Manual

Includes Instructions for Continued Airworthiness
for STC SA01866WI

190-02291-01 2017 - 2023 Revision 11

© Copyright 2017 - 2023
Garmin Ltd. or its subsidiaries
All Rights Reserved

Except as expressly provided herein, no part of this manual may be reproduced, copied, transmitted, disseminated, downloaded or stored in any storage medium, for any purpose without the express prior written consent of Garmin. Garmin hereby grants permission to download a single copy of this manual and of any revision to this manual onto a hard drive or other electronic storage medium to be viewed and to print one copy of this manual or of any revision hereto, provided that such electronic or printed copy of this manual or revision must contain the complete text of this copyright notice and provided further that any unauthorized commercial distribution of this manual or any revision hereto is strictly prohibited.

Garmin International, Inc.
1200 E. 151st Street
Olathe, KS 66062 USA
Telephone: 913.397.8200
www.garmin.com

Garmin (Europe) Ltd.
Liberty House, Bulls Copse Road
Hounsdown Business Park
Southampton, SO40 9RB, UK
Phone: +44 (0) 23 8052 4000
Fax: +44 (0) 23 8052 4004

Garmin AT, Inc.
2345 Turner Rd., SE
Salem, OR 97302 USA
Telephone: 503.581.8101

RECORD OF REVISIONS

Revision	Revision Date	Description
9	03/03/21	Added cable roller inspection
10	07/20/22	Added cushion clamp and servo cable clamp inspections
11	02/10/23	Added 3 hole servo cable clamps, new inspection

DOCUMENT PAGINATION

Section	Pagination
Table of Contents	i – iv
Section 1	1 – 4
Section 2	5 – 9
Section 3	10 – 10
Section 4	11 – 18
Section 5	19 – 25
Section 6	26 – 29
Section 7	30 – 30
Section 8	31 – 31
Section 9	32 – 46

INFORMATION SUBJECT TO EXPORT CONTROL LAWS

This document may contain information which is subject to the Export Administration Regulations ("EAR") issued by the United States Department of Commerce (15 CFR, Chapter VII Subchapter C) and which may not be exported, released or disclosed to foreign nationals inside or outside the United States without first obtaining an export license. A violation of the EAR may be subject to a penalty of up to 10 years imprisonment and a fine of up to $1,000,000 under section 2410 of the Export Administration Act of the 1979. The preceding statement is required to be included on any and all reproductions in whole or in part of this manual.

WARNING

This product, its packaging, and its components contain chemicals known to the State of California to cause cancer, birth defects, or reproductive harm. This Notice is being provided in accordance with California's Proposition 65. If you have any questions or would like additional information, please refer to our web site at www.garmin.com/prop65.

WARNING

Perchlorate Material – special handling may apply, Refer to www.dtsc.ca.gov./hazardouswaste/perchlorate.

IMPORTANT

All screen shots used in this document are current at the time of publication. Screen shots are intended to provide visual reference only. All information depicted in screen shots, including software file names, versions and part numbers, is subject to change and may not be up to date.

TABLE OF CONTENTS

PARAGRAPH **PAGE**

1. INTRODUCTION 1
1.1 Content, Scope, Purpose 1
1.2 Applicability 1
1.3 Organization 1
1.4 Definitions/Abbreviations 2
1.5 Units of Measure 3
1.6 Reference Publications 3
1.7 Revision and Distribution 4
1.8 Garmin Technical Support 4
2. SYSTEM DESCRIPTION 5
2.1 Equipment Descriptions 5
2.2 GFC 500 Interface Summary 6
2.3 Power Requirements 7
2.4 Electrical Bonding 7
3. CONTROL AND OPERATION 10
3.1 GMC 507 10
3.2 Autopilot Disconnect/Trim Interrupt Switch 10
3.3 Trim Switch 10
3.4 Go Around (GA) Switch 10
4. INSTRUCTIONS FOR CONTINUED AIRWORTHINESS 11
4.1 Airworthiness Limitations 11
4.2 Servicing Information 12
4.3 Maintenance Intervals 14
4.4 Visual Inspection 15
4.5 Electrical Bonding Test 16
4.6 Disconnect Tone and Sonalert Test 18
5. TROUBLESHOOTING 19
5.1 GFC 500 Failure Messages 19
5.2 General Troubleshooting 19
5.3 GFC 500 Interconnect Drawings 25
5.4 Connector Layout 25
6. EQUIPMENT REMOVAL & INSTALLATION 26
6.1 GMC 507 26
6.2 GSA 28 Servos 28
6.3 Servo Cable Clamp Isolators 28
7. GFC 500 LRU REPLACEMENT/CONFIGURATION & TESTING 30
7.1 GMC 507 30
7.2 GSA 28 Servo 30
8. GFC 500 SOFTWARE LOAD AND CONFIGURATION PROCEDURES 31
8.1 GMC 507 and GSA 28 Software Loading 31
8.2 GFC 500 System Configuration 31
9. GFC 500 RETURN TO SERVICE PROCEDURE 32
9.1 Yaw Offset and Pitch/Roll Offset Calibration 32
9.2 Pre-Flight Test (PFT) 34
9.3 Normal Mode Tests 34

LIST OF ILLUSTRATIONS

FIGURE **PAGE**

Figure 2-1 – GMC 507 5
Figure 2-2 – GFC 500 System Overview 6
Figure 2-3 – Electrical Bonding Preparation – Nut Plate 8
Figure 2-4 – Electrical Bonding Preparation – Bolt/Nut Joint 8
Figure 2-5 – Electrical Bonding Preparation – Terminal Lug 8
Figure 5-1 – Attitude Calibration Invalid 21
Figure 5-2 – Incorrect CAN Wiring Example 22
Figure 5-3 – Correct CAN Bus Terminator Example 22
Figure 6-1 – GMC 507 Installation with rack 27
Figure 6-2 – GMC 507 Installation without rack 27

LIST OF TABLES

TABLE ..... PAGE

Table 1-1 – Required Documents 3
Table 1-2 – Garmin Reference Documents 3
Table 1-3 – Other Reference Documents 4
Table 2-1 – Power Requirements 7
Table 2-2 – Electrical Bonding 7
Table 4-1 – Maintenance Intervals 14
Table 4-2 – Visual Inspection Procedure 15
Table 4-3 – Lightning Strike Inspection Procedure 16
Table 5-1 – Status LED Indications 23

1. Introduction

1.1 Content, Scope, Purpose

This document provides maintenance instructions and Instructions for Continued Airworthiness (ICA) for the GFC 500 Autopilot with Electronic Stability and Protection as installed under Supplemental Type Certificate (STC) SA01866WI.

1.2 Applicability

This document applies to all Part 23 aircraft equipped with the GFC 500 installed under AML STC SA01866WI.

Modification of an aircraft by STC SA01866WI obligates the aircraft operator to include the maintenance information provided by this document in the operator's Aircraft Maintenance Manual and the operator's Aircraft Scheduled Maintenance Program.

1.3 Organization

The following outline briefly describes the organization of this manual:

Section 2: System Description
Provides a complete description of the type design change associated with installing the GFC 500 Autopilot. Also provides an interface summary, power requirements, and instructions on electrical bonding.

Section 3: Control and Operation
Provides brief instructions on controls and operation.

Section 4: Instructions for Continued Airworthiness
Provides maintenance instructions for continued airworthiness of the GFC 500 Autopilot.

Section 5: Troubleshooting
Provides troubleshooting information to aid in diagnosing and resolving potential problems with the GFC 500 Autopilot.

Section 6: Equipment Removal & Replacement
Gives instructions for the removal and replacement of GFC 500 Autopilot equipment.

Section 7: GFC 500 LRU Replacement/Configuration & Testing
Gives instructions for loading software, configuring, and testing of GFC 500 Autopilot equipment.

Section 8: GFC 500 Software Load and Configuration Procedures
Gives instructions for loading software and configuring the GFC 500 Autopilot.

Section 9: GFC 500 Return to Service Procedure
Specifies return-to-service procedures to be performed upon completion of maintenance of the GFC 500 Autopilot.

1.4 Definitions/Abbreviations

ADI:	Attitude Director Indicator
AML:	Approved Model List
ARP:	Aerospace Recommended Practice
ASTM:	American Society for Testing and Materials
CDI:	Course Deviation Indicator
CFR:	Code of Federal Regulations
CWS:	Control Wheel Steering
DDM:	Difference in Depth of Modulation
DTK:	Desired Track
ESP:	Electronic Stability and Protection
FAA:	Federal Aviation Administration
GPS:	Global Positioning System
ICA:	Instructions for Continued Airworthiness
ILS:	Instrument Landing System
LRU:	Line Replaceable Unit
OBS:	Omni-Bearing Selector
PFT:	Pre-Flight Test
SAE:	Society of Automotive Engineers
STC:	Supplemental Type Certificate
VOR:	VHF Omnidirectional Radio

Composite Aircraft – Aircraft with an airframe constructed from wood or composite, including exterior skin

1.5 Units of Measure

Unless otherwise stated, all units of measure are English units.

1.6 Reference Publications

All of the documents listed in Table 1-1 and Table 1-2 are available for download through the Dealer Resource Center section of the Garmin web site. Refer to Section 1.7 for details.

The documents listed in Table 1-1 are required by this maintenance manual to perform maintenance on the GFC 500 Autopilot. It is the responsibility of the owner/operator to ensure that the latest versions of these documents are used during operation, servicing or maintenance of the airplane. Note: There is a model-specific installation manual addendum and gain addendum for each model covered. Each has a different dash number. Refer to the Master Drawing List 005-01264-00 for applicability.

Table 1-1 – Required Documents

Document Number	Title
005-01264-00	Master Drawing List GFC 500 Autopilot with Electronic Stability and Protection Part 23 AML STC
005-01470-XX	GFC 500 Model-Specific Gain Addendum
190-02291-00	GFC 500 Autopilot with Electronic Stability and Protection Part 23 AML STC Installation Manual
190-02291-XX	GFC 500 Autopilot with Electronic Stability and Protection Part 23 AML STC Model-Specific Installation Manual Addendum
190-01112-12	G5 Electronic Flight Instrument Pilot's Guide for Certified Aircraft
190-02472-00	G3X Touch Pilot's Guide for Certified Aircraft
190-02246-01	GI 275 Pilot's Guide

The documents listed in Table 1-2 are recommended to be available during the performance of maintenance activities.

Table 1-2 – Garmin Reference Documents

Document Number	Title
190-01112-11	Garmin G5 Electronic Flight Instrument Part 23 AML STC Maintenance Manual
190-02291-00	Garmin GFC 500 Autopilot with Electronic Stability and Protection Part 23 AML STC Installation Manual
190-01112-12	G5 Electronic Flight Instrument Pilot's Guide for Certified Aircraft
190-02472-02	Garmin G3X Touch Electronic Flight Instrument System Part 23 AML STC Maintenance Manual includes Instructions for Continued Airworthiness
190-02472-00	G3X Touch Pilot's Guide for Certified Aircraft
190-02246-11	GI 275 Part 23 AML STC Maintenance Manual/ICA
190-02246-01	GI 275 Pilot's Guide

Table 1-3 – Other Reference Documents

Document Number	Title
AC 43.13-1B	FAA Advisory Circular, Acceptable Methods, Techniques, and Practices – Aircraft Inspection and Repair
AC 43.13-2B	FAA Advisory Circular, Acceptable Methods, Techniques, and Practices – Aircraft Alterations
SAE ARP1870	Aerospace Systems Electrical Bonding and Grounding for Electromagnetic Compatibility and Safety
SAE AS4461	Assembly and Soldering Criteria for High Quality/High Reliability Soldered Wire and Cable Termination in Aerospace Vehicles
SAE AS50881	Wiring, Aerospace Vehicle
ASTM F 2490-05	Standard Guide for Aircraft Electrical Load and Power Source Capacity Analysis

1.7 Revision and Distribution

This document is required for maintaining the continued airworthiness of the GFC 500 Autopilot. When this document is revised, every page will be revised to indicate current revision level.

Garmin Dealers may obtain the latest revision of this document on the Garmin Dealer Resource Center website.

Owner/operators may obtain the latest revision of this document from the https://fly.garmin.com Support page, or by contacting a Garmin dealer, contacting Garmin Product Support at 913-397-8200, toll free 866-739-5687, or using around the world contact information on https://fly.garmin.com/.

A Garmin Service Bulletin describing the revision to this document will be sent to Garmin dealers if the revision is determined to be significant.

1.8 Garmin Technical Support

For technical support contact, Garmin Aviation Product Support at 913-397-8200 (toll free 866-739-5687) or by using the around the world contact information on www.flygarmin.com.

2. System Description

2.1 Equipment Descriptions

2.1.1 GMC 507 Autopilot Mode Controller

The GMC 507 Autopilot mode controller is shown in Figure 2 1. The switches on the front panel of the GMC 507 provide inputs to the G5 instrument, GI 275 instrument, or G3X PFD, and GSA 28 servos for flight director computations. The GMC 507 also contains some of the system monitoring and audio functions for the system.

Refer to the G5 Electronic Flight Instrument Pilot's Guide for Certified Aircraft, 190-01112-12 or to the G3X Touch Pilot's Guide for Certified Aircraft, 190-02472-00 or to the GI 275 Pilot's Guide, 190-02246-01 for operational characteristics of the system.



Figure 2-1 – GMC 507

2.1.2 GSA 28 Servo

The GSA 28 is a smart servo. The autopilot, trim and ESP algorithms are performed by the servo. The motor in the GSA 28 servo is a brushless DC motor. This brushless DC motor has an inherent safety feature in that it cannot drive by itself and requires software commutation to run. The brushless DC motor also has a lower backdrive friction than brushed motor or steppers motors. The GSA 28 is limited to a maximum of 60 in-lbs of torque.

GFC 500 Autopilot systems may have up to four servos (pitch, roll, yaw, and pitch trim). The yaw and pitch trim servos are optional and may not be available on all airframes. Most installations will use bridle cables attached to the primary flight control cables using clamps. New servo brackets, servo bridle cables, and clamps are installed by this STC.

2.1.3 Audio Output

The GMC 507 provides an analog audio output to an audio panel, plus an active low output to drive an external aural alert device (e.g. sonalert). The analog audio can be interfaced to any audio panel that has an unswitched and unmuted analog audio input. If no existing audio panel is interfaced, a sonalert is required.

If installed in conjunction with a G3X system, the G3X PFD provides the audio and the GMC 507 is not connected to the audio panel. If a G5 is not installed as the standby instrument for the G3X system, a sonalert is required.

2.2 GFC 500 Interface Summary

The following figure provides a high-level summary of the GFC 500 autopilot system. The G5 is required to be installed by STC SA01818WI or a G3X system installed by STC SA01899WI or a GI 275 installed by STC SA02658SE. The minimum system requires the G5 in the attitude indicator position.



Figure 2-2 – GFC 500 System Overview

2.3 Power Requirements

Table 2-1 below summarizes the power requirements for the GFC 500 LRUs.

Table 2-1 – Power Requirements

LRU	Characteristics	Specifications
GMC 507	Average Current Draw @ 14 VDC	0.11 A
	Max Current Draw @ 14 VDC	0.20 A
	Average Current Draw @ 28 VDC	0.06 A
	Max Current Draw @ 28 VDC	0.11 A
GSA 28	Average Current Draw @ 14 VDC	0.36 A
	Max Current Draw @ 14 VDC	1.80 A
	Average Current Draw @ 28 VDC	0.20 A
	Max Current Draw @ 28 VDC	0.90 A

2.4 Electrical Bonding

For the purposes of this STC, aircraft ground reference definitions vary according to airframe type as defined in Table 2-2. Refer to the periodic test and reconditioned resistance values corresponding to these ground reference definitions when performing the equipment bonding tests in Section 4.5.

The periodic test value is the value allowed during the bonding checks specified in Section 4.5. The reconditioned value is the value allowed on initial installation or if the bond must be reworked if the periodic test value is exceeded.

Refer to SAE ARP 1870 Section 5 when surface preparation is required to achieve electrical bond.

Table 2-2 – Electrical Bonding

Aircraft Type	Ground Reference	Maximum Resistance Between GFC 500 Equipment Chassis and Ground Reference (mΩ)	
		Periodic Test	Reconditioned
Metallic Airframe	Nearby metal structure for servos or Instrument panel for GMC 507	10.0	2.5
Composite Airframe	Instrument panel	10.0 for GMC 507 50.0 for GSA 28	2.5 for GMC 507 25.0 for GSA 28
American Champion Model 8GCBC	Nearby tubular structure	**Maximum Resistance Between Belly Panels and Ground Reference (mΩ)**	
		200	100

2.4.1 Consideration for Untreated or Bare Dissimilar Metals

The correct material finish is important when mating untreated or bare dissimilar metals. Materials should be galvanically compatible. When corrosion protection is removed to make an electrical bond any exposed area after the bond is completed should be protected again. Additional guidance can be found in SAE ARP 1870 Section 5. Typical electrical bonding preparation examples are shown in Figure 2-3, Figure 2-4, and Figure 2-5.

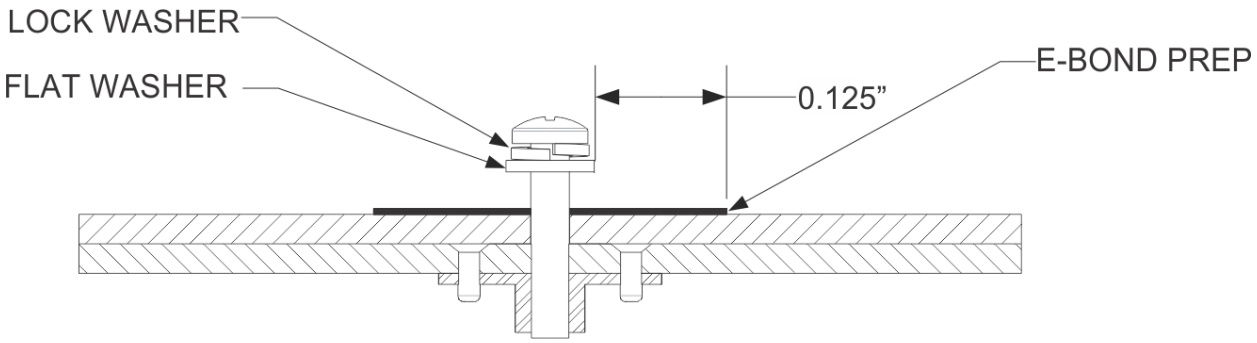

Figure 2-3 – Electrical Bonding Preparation – Nut Plate

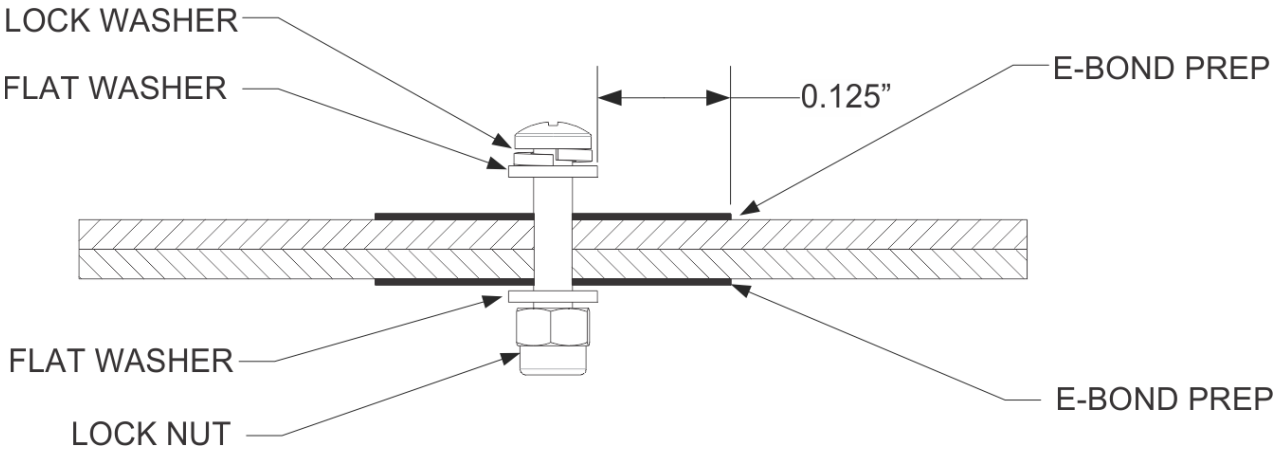

Figure 2-4 – Electrical Bonding Preparation – Bolt/Nut Joint

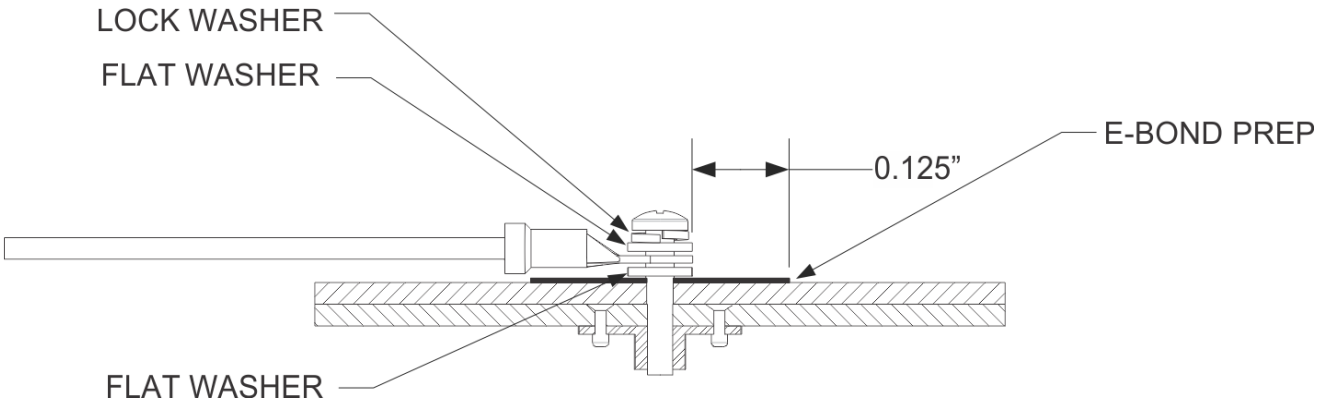

Figure 2-5 – Electrical Bonding Preparation – Terminal Lug

2.4.2 Preparation of Aluminum Surfaces

The following general procedure is recommended to prepare an aluminum surface for proper electrical bonding.

1. Clean grounding location with solvent.
2. Remove non-conductive films or coatings from the grounding location.
3. Apply a chemical conversion coat such as Alodine 1200 to the bare metal.
4. Once the chemical conversion coat is dry, clean the area.
5. Install bonding equipment at grounding location.
6. After bond is complete, if any films or coatings were removed from the surface, reapply a suitable film or coating to the surrounding area within 24 hours.

After satisfactory electrical bond is achieved, when it has been necessary to remove any high-resistance protective coating, the area from which the coating has been removed should be refinished with the same finish as is on the rest of the part within 24 hours. In cases where the parts come in with certain areas spot-faced, or if there is no finish on the part (bare metal), apply conformal coating over the bond joint and hardware per MIL-I-46058 or clear lacquer per TT-L-20A in order to facilitate future inspection. Refer to the model specific Aircraft Maintenance Manual or Standard Practices Manual for surface protection requirements applicable to affected areas. The correct material finish is important when mating untreated or bare dissimilar metals. They should be galvanically compatible. When corrosion protection is removed to make an electrical bond, any exposed area after the bond is completed should be protected again. Additional guidance can be found in SAE ARP 1870 Section 5.

For a more detailed procedure, refer to SAE ARP 1870 Sections 5.1 and 5.5.

3. Control and Operation

3.1 GMC 507

The GMC 507 provides GFC 500 Autopilot mode selections and annunciations. Refer to the G5 Electronic Flight Instrument Pilot's Guide for Certified Aircraft, 190-01112-12, or to the G3X Touch Pilot's Guide for Certified Aircraft, 190-02472-00 or to the GI 275 Pilot's Guide, 190-02246-01 for operational characteristics of the system.

3.2 Autopilot Disconnect/Trim Interrupt Switch

An AP DISC/TRIM INT switch is provided on the pilot's flight controls to allow for manual disconnect of the autopilot system and to interrupt the electric pitch trim.

3.3 Trim Switch

If the GFC 500 Autopilot includes a pitch trim servo, a TRIM switch is provided on the pilot's flight controls to allow for manual electric control of the pitch trim system. If the autopilot is engaged and the TRIM switch is pressed, the autopilot will disengage.

3.4 Go Around (GA) Switch

A GO AROUND switch is provided for engagement of the go around mode. When go around mode is engaged, the autopilot engages in wings level roll attitude and nose up pitch attitude. The pitch attitude is dependent on the aircraft model. Refer to the appropriate GFC 500 Autopilot Airplane Flight Manual Supplement for the go around pitch attitude.

4. Instructions for Continued Airworthiness

This document is designed as Instructions for Continued Airworthiness in accordance with 14 CFR 23.1529 Appendix G for use by the owner/operator of the airplane to maintain the GFC 500 Automatic Flight Control System installed under STC SA01866WI.

4.1 Airworthiness Limitations

The GFC 500 Autopilot is airworthy when installed, configured, and maintained in accordance with this section.

There are no new or additional Airworthiness Limitations associated with this equipment and/or this installation.

The Airworthiness Limitations section is FAA-approved and specifies maintenance required under §§ 43.16 and 91.403 of Title 14 of the Code of Federal Regulations unless an alternative program has been FAA-approved.

Paul Mast — 2-10-2023

FAA APPROVED — Paul Mast, STC Unit Administrator, ODA-240087-CE — Date

4.2 Servicing Information

Servicing of the GFC 500 Autopilot equipment is ‘on condition’. In the event of system failure, troubleshoot the GFC 500 Autopilot in accordance with Section 5.

4.2.1 On Condition Servicing

‘On Condition’ replacement and/or servicing should occur when an item exhibits conditions, symptoms, and/or abnormalities defined in Section 5 of this manual. Replacement and/or servicing should be made only after the technician troubleshoots the system to the extent determined necessary by using the guidance in this manual along with common avionics maintenance practices.

The remainder of this document is organized in the following fashion:

- Section 4.3 lists maintenance requirements related to the GFC 500 Autopilot.
- Section 6 gives instructions regarding the removal and replacement of GFC 500 equipment and parts.
- Section 7 gives configuration and testing instructions to be accomplished if GFC 500 equipment or parts are removed or replaced.
- Section 9 specifies system return-to-service procedures.

4.2.2 Required Tools

The following tools are needed to perform maintenance tasks on GFC 500 Autopilot equipment:

- Calibrated Milliohm meter with Kelvin probes, OR
    - Ammeter capable of measuring 1.5 Amps of current with a minimum resolution of 0.1A.
    - Voltmeter capable of measuring millivolts with a minimum resolution of 0.1mV.
    - Variable DC Power Supply capable of providing 1 amp current
- 3/32” Hex tool
- Calibrated VHF NAV/COM/ILS ramp tester or equivalent
- Calibrated pitot/static ramp tester
- Outdoor line-of-site to GPS satellite signals or GPS indoor repeater
- Headset/microphone
- Ground Power Unit
- Calibrated Flight Control Cable Tension Meter or equivalent
- Calibrated torque wrench capable of measuring 0 – 70 in/lbs.
- Standard sockets & wrenches

4.2.3 Special Tools

There are no special tools required to perform maintenance on the GFC 500 Autopilot.

4.3 Maintenance Intervals

Table 4-1 shows systems and items, installed by this STC, which must undergo tests or checks at specific intervals. If the interval is shown to be in flight time as well as calendar months, the first interval reached should be used as the limit.

Those inspections that are based on flight time or calendar elapsed time or cycles shall have specific intervals stated in Table 4-1.

Table 4-1 – Maintenance Intervals

Item	Description/Procedure	Manual Section No.	Interval
Equipment electrical Bonding Test	Verify bonding of GMC 507 rack (if installed), GMC 507 (if installed without rack), GSA 28 mounting brackets, and any associated bonding components	4.5	Following removal and replacement of the racks or brackets **OR** removal and replacement of the belly panel for American Champion Model 8GCBC **AND** Every 2000 flight hours or ten years, whichever is first
Equipment Bonding and Control System Visual Inspection – suspected lightning strike	Inspection of bonding Components and servo control system	Table 4-3	At any suspected or actual lightning strike
GFC 500 Equipment Visual Inspection	Visual inspection of GFC 500 components	4.4	At every annual inspection
Disconnect Tone and Sonalert Test	Functional test of Audio output and/or Sonalert	4.6	At every annual inspection
GSA 28 Servos	Removal and Replacement	6.2	On Condition
GMC 507 Autopilot Mode Controller	Removal and Replacement	6.1	On Condition
Servos, Servo Control Cables and associated hardware	Visual Inspection	Table 4-2	With aircraft manufacturer's required primary control cable checks

4.4 Visual Inspection

Perform a visual inspection in accordance with requirements in Table 4-2. Check for corrosion, damage, or other defects of the GMC 507 and the GSA 28s. Replace any damaged parts as required. Inspection may require the temporary removal of a unit or units to gain access to connectors. Follow guidance in Section 6 for equipment removal and replacement. Refer to the aircraft manufacturer service or maintenance manual for instructions on access panel locations.

Table 4-2 – Visual Inspection Procedure

Item	Description/Procedure	Initials
GFC 500 Equipment Visual Inspections	a) Conduct a visual inspection of the GMC 507 and GSA 28 equipment installations in accordance with 14 CFR Part 43, Appendix D. If the equipment does not pass the visual inspection, complete the following procedure: i. Correct improper installations and ensure that all install racks, brackets, and fasteners are secure. Correct improper wire routing and ensure that the wire harness is securely mounted. Replace install racks, brackets, wiring and associated electrical bonding or shielding components with obvious defects ii. Complete the equipment electrical bonding test as described in section 4.5 for any components that are replaced. iii. Equipment shield terminations shall be free of corrosion and secure to the backshell or aircraft ground. b) Inspect all exposed wire harness for chafing, damage, proper routing of wire bundles and security of attachment in accordance with AC 43.13-1B, Chapter 11, Section 8, Paragraph 11-96.	
Servos, Servo Control Cables, and associated hardware	a) Using a flashlight, inspect the GSA 28 servos, connectors, support structure, and control cables to ensure that no corrosion, chafing, cracks, or other defects exist. b) Have an assistant manually move the control surfaces from stop to stop and visually observe the servo and control cabling/chain. Ensure there is no binding in the control cabling or chain, that the capstan/sprocket rotates freely, and that there is no rough turning or noise from the servo bearings. c) Check the servo control cables in accordance with AC 43.13-1B, Chapter 7, Section 8, Paragraph 7-149 to ensure no fraying, corrosion, or other damage exists. If the condition of any cable is questionable, replace it with a new one. Additionally, where servo cables wrap around capstans and pulleys, measure the cable diameter with cable tension applied. If the cable has lost 30% or more of its nominal diameter, replace the servo cable. d) Lubricate any aircraft cables which have been replaced by this STC (e.g. continuous travel pitch trim cables) in accordance with the service manual applicable to the aircraft model. e) Check the tension on the servo control cables. Refer to the appropriate Install Manual Addendum for the aircraft type for cable tension specifications: f) Ensure that each cable is correctly attached to the existing flight control system as shown in the appropriate Install Manual Addendum. If servo cable clamps are installed, inspect the torque seal tamper indicator at the intersection of the cable and clamps. If torque seal is cracked or damaged, remove cable clamps for further inspection. g) Visually inspect the condition of lock nuts, cable guard support plate, cable guard posts, self-locking castle nuts, cotter pin, split lock washer, flat washer and the output shaft to ensure no corrosion, cracks, or other defects exist. h) For continuous travel servos only, visually inspect the condition of the idler pulley, shaft, washer, and E-ring, to ensure no corrosion, chafing, cracks, or other defects exist. i) For aircraft with roller type cable guides, visually inspect the rollers guiding servo cables. Replace roller if wear exceeds 0.04 inches. Refer to applicable installation manual addendum (190-02291-XX) for roller locations. j) For aircraft with cushion clamps (such as Adel clamps), visually inspect the clamp for security, condition of the cushion material, condition of the tubular frame, and any evidence of corrosion	

Bonding tape and straps (Composite airframes only)	Inspect aluminum foil tape and associated bonding straps used to ground the servo brackets to the console/instrument panel. Verify the tape is not torn, damaged, or showing signs of corrosion. Verify the boding strap fasteners are secure and the braids are not frayed. If any of these conditions exist, replace any damaged bonding tape and bonding straps, reinstalling as proscribed in the airframe specific installation manual addendum (190-02291-XX)	
Existing Flight Control System	Inspect the existing flight control system in accordance with the applicable Aircraft Maintenance Manual in the areas near each servo installation to ensure: - Cables are routed properly and have sufficient clearance from surrounding structure or other systems Pulleys, fairleads, and cables are intact and not worn beyond the limits in the applicable Aircraft Maintenance Manual	

Table 4-3 – Lightning Strike Inspection Procedure

Item	Description/Procedure	Initials
GMC 507, GSA 28, Cable Clamp Isolators	In the event of a suspected or actual lightning strike to the aircraft, the bonding components for the GFC 500 Autopilot (bonding straps, mounting hardware etc.) must be inspected. If any damage is found, damaged components must be replaced in accordance with specifications and procedures shown in Section 6. If any bonding components are replaced, measure the resistance between the replaced component and aircraft ground. Verify the resistance is less than or equal to 2.5mΩ. For tube and fabric aircraft, if any part of the control surface shows signs of a lightning strike, then the servo in that axis must be replaced. For composite aircraft only: In the event of a suspected or actual lightning strike to the aircraft, the servo installations of the GFC 500 Autopilot (servos, servo cables and associated main control cables) must be inspected. If there are any signs of arcing, including burning and pitting, between the main control cables and the servo cables, the servo in that axis and servo cable clamp isolators (if installed) must be replaced in accordance with specifications and procedures shown in Section 6. If the GFC 500 system is electrically connected to existing flight control equipment (e.g. trim actuator), the equipment must be inspected in accordance with the manufacturers maintenance data	

4.5 Electrical Bonding Test

The following bonding tests are provided for aircraft that have a GFC 500 Autopilot installed as a requirement beyond any that may be given in the aircraft maintenance manual.

4.5.1 Requirements

All GFC 500 equipment must be installed. For the GMC 507, the tests are performed with the connectors connected. For the GSA 28, tests are conducted with the connector disconnected. Gain access for the procedure listed below in Section 4.5.3 as required and in accordance with the aircraft maintenance manual. It is recommended that these tests are conducted after visual inspection of the zone to minimize access requirements.

NOTE: *For servo installations that include overbraided wiring, ensure there is no secondary ground path by disconnecting all GSA 28 connectors and harness/overbraid ground stud during the test. Care must be taken to ensure the wire harness overbraid is not touching any part of the servos or servo bracketry during electrical bond testing.*

4.5.2 Test Equipment

A milliohm meter and Kelvin probes are recommended for this test. However, an alternate method may be used to provide equivalent results by using the following procedure and a standard voltmeter, power supply with adjustable current limit, and ammeter. The test set up for this alternate method is described below.

All test equipment used for the bond checks must be calibrated.

1. Connect the positive lead of the power supply to airframe ground. Connect/touch the positive lead of the voltmeter to the same point.

NOTE

Ensure that the voltmeter and power supply probes do not touch, so as not to induce contact resistance.

2. Touch negative lead of power supply to each of the test points listed while performing Step 3. At each required point, configure the power supply to produce 1 amp before measuring voltage. (Use an ammeter to ensure current is within ***minimum*** of 1 amp ±100 milliamp at each point). Do not allow the reference current to exceed 1.5 amps for safety.
3. With the current set to 1A, the voltage reading will be the value of the bonding resistance. Set the voltmeter to measure millivolts and null the reading. Measure the voltage from airframe ground (step 1) to each required test points and record the voltage. (Perform Step 2 at each required point and ensure that ***minimum*** of 1 amp ±100 milliamp is present when measuring the voltage.)

   TIP: When a 1A current is used all the millivolt readings are the same as mΩ, and required no further calculation of bond resistance. If 1 amp reference current cannot be maintained and is higher divide the measured voltage by current to get the resistance value.

4.5.3 Electrical Bonding Procedure

Using one of the two measurement methods in Section 4.5.2 record the bonding measurement for the following equipment. Some equipment in the list is optional and may not be installed.

Ensure that the measurements do not exceed the values shown in Table 2-2. If the values exceed those listed, perform the reconditioning procedure in Section 2.4.

- GMC 507 case: _____ mΩ
- GSA 28 (Roll) chassis: _____ mΩ
- GSA 28 (Pitch) chassis: _____ mΩ
- GSA 28 (Pitch Trim) chassis: _____ mΩ
- GSA 28 (Yaw Damper) chassis: _____ mΩ
- American Champion Model 8GCBC Belly Panel: _____ mΩ

4.6 Disconnect Tone and Sonalert Test

Perform the Disconnect Tone and Sonalert Functional Test at the intervals specified in Table 4-1.

1. Apply external electrical power to the aircraft and avionics systems.
2. Ensure that the GFC 500 Autopilot passes PFT.
3. Engage the autopilot by pressing the AP button on the GMC 507.
4. Disengage the autopilot by pressing the AP DISC/TRIM INT switch on the pilot's flight controls.
5. Verify that the normal autopilot disconnect tone plays.
    a. If an audio panel is connected, verify that the autopilot disconnect tone plays through the speaker and headphones. **NOTE:** *The normal autopilot disconnect tone is three high-low tones approximately three seconds in duration.*
    b. If a sonalert is connected, verify that the autopilot disconnect tone plays through the sonalert. **NOTE:** *The normal autopilot disconnect sonalert tone is a continuous 2000 Hz tone that plays for approximately 3 seconds.*

5. Troubleshooting

This section provides information to assist with troubleshooting if problems occur. See the GFC 500 Autopilot Configuration Log retained in the aircraft permanent records for a list of the system configuration data. When troubleshooting the GFC 500 Autopilot, refer to the interconnect diagrams retained with the aircraft permanent records.

Before troubleshooting the GFC 500 Autopilot, ensure that system configuration settings match those recorded in the completed GFC 500 Autopilot Configuration Log that is retained in the aircraft permanent records.

NOTE: *For error message troubleshooting specific to the G5/GAD 29()/GMU 11 installation, refer to the Garmin G5 Electronic Flight Instrument Part 23 AML STC Maintenance Manual including ICA, p/n 190-01112-11.*

NOTE: *For error message troubleshooting specific to the G3X system installation, refer to the Garmin G3X Touch Electronic Flight Instrument Part 23 AML STC Maintenance Manual including ICA, p/n 190-02472-02.*

NOTE: *For error message troubleshooting specific to the GI 275 system installation, refer to the GI 275 Part 23 AML STC Maintenance Manual/ICA, p/n 190-02246-11.*

5.1 GFC 500 Failure Messages

During operation of the GFC 500 Autopilot, the G5, GI 275, or G3X may annunciate a failure or fault that is specific to the GFC 500 Autopilot. Contact Garmin Technical Support for assistance in troubleshooting the problem.

5.2 General Troubleshooting

5.2.1 General GFC 500 Troubleshooting

5.2.1.1 GFC 500 Will Not Engage

If the GFC 500 will not engage, the following troubleshooting steps may be used to help identify the cause.

1. Verify that there are no red-X indications present on the G5, G3X, or GI 275. Correct any red-X indications that may be present. Refer to the G5 STC Maintenance Manual, Garmin p/n 190-01112-11, the G3X STC Maintenance Manual, Garmin p/n 190-02472-02, or the GI 275 STC Maintenance Manual, Garmin p/n 190-02246-11 for further details.
2. Check for loose terminals on the circuit breaker connections on the power wire(s) causing intermittent power connections. Also, check for intermittent circuit breakers.
3. Check that all connectors are fully seated, and that the jack screw connectors are fully tightened on both sides of all connectors.
4. Check the security of harness attachments. If the harness is able to move around during flight, the wires could pull on or vibrate the connector, causing intermittent connections.
5. Ensure that the GMC 507 is securely fastened to the panel or rack.
6. Check the wiring harness for faults, defects, or shorts to ground.
7. Disconnect the connectors on the GMC 507 and/or GSA 28s and check for any bent pins or evidence of corrosion.

8. Check the AP Disc switch to verify it is not shorted.
    a. For G5 systems perform the following:
        i. Restart the G5 ADI in configuration mode.
        ii. Navigate to the Flight Controls page group.
        iii. Navigate to the "Autopilot Roll", “Autopilot Pitch”, “Yaw Damper” (if installed), “Pitch Trim” (if installed), and “Mode Control Panel” pages.
        iv. On each of the above pages, scroll down to the line item labeled AP Disc Input. With the AP DISC/TRIM INT switch not depressed, the line should read “Open/High” for the GMC and “Open” for the servos. With the AP DISC/TRIM INT switch depressed, the line should read “LOW”. If it does not, troubleshoot the wiring.
    b. For G3X systems perform the following:
        i. Restart the G3X in configuration mode.
        ii. Navigate to the System Information page.
        iii. Navigate to the “ROLL”, “PITCH”, “PTRIM” (if installed), “YD” (if installed), and “GMC” pages.
        iv. On each of the above pages, locate the line item labeled AP Disc Input. With the AP DISC/TRIM INT switch not depressed, the line should read “Open/High” for the GMC, and “Open” for the servos. With the AP DISC/TRIM INT switch depressed, the line should read “LOW”. If it does not, troubleshoot the wiring.
    c. For GI 275 systems perform the following:
        i. Restart the GI 275 ADI in configuration mode.
        ii. Navigate to the Diagnostics/GFC 500 page
        iii. Under the AP Disc Input heading, status is shown for Roll, Pitch Yaw (if installed), Pitch Trim (If Installed), and GMC 507 line items.
        iv. For each line item described above verify the following behavior: With the AP DISC/TRIM INT switch not depressed, the line should read “Open/High” for the GMC and “Open” for the servos. With the AP DISC/TRIM INT switch depressed, each line item should read “LOW”. If it does not, troubleshoot the wiring.

5.2.1.2 GFC 500 Will Not Pass Pre-Flight Test (PFT)

If the GFC 500 will not pass Pre-Flight Test (PFT), the following troubleshooting steps may be used to help identify the cause.

1. Verify that there are no red-X indications present on the G5, G3X, or GI 275. Correct any red-X indications that may be present. Refer to the G5 STC Maintenance Manual, Garmin p/n 190-01112-11, the G3X STC Maintenance Manual, Garmin p/n 190-02472-02, or the GI 275 STC Maintenance Manual, Garmin p/n 190-02246-11 for further details.
2. For G5 Systems, verify that the Pitch/Roll Offset procedure has been completed.
    a. Restart the G5 ADI in configuration mode.
    b. Navigate to the Mode Control Panel page group
    c. Navigate to the “Attitude Calibration” line item.
    d. Verify that there is not a red “X” or “Invalid” shown on the line. Refer to Figure 5-1 below for a representative example.
    e. If there is a red “X” or “Invalid” shown, repeat the Yaw Offset (if required) and Pitch/Roll Offset Calibration as described in Section 9.1.

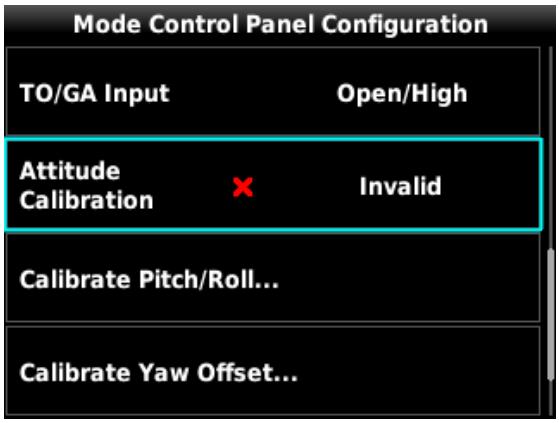

Figure 5-1 – Attitude Calibration Invalid

3. For G3X systems, verify that the Pitch/Roll Offset procedure has been completed.
    a. Restart the G3X PFD in configuration mode.
    b. Navigate to the System Information page group.
    c. Select the GMC from the Device List.
    d. Verify that there is not a Red “X” or “Invalid” shown in the Autopilot Controller Info section.
    e. If there is a red “X” or “Invalid” shown, repeat the Yaw Offset (if required) and Pitch/Roll Offset Calibration as described in Section 9.1.

4. For GI 275 Systems, verify that the Pitch/Roll Offset procedure passes successfully.
    a. Restart the GI 275 in configuration mode.
    b. Repeat the Yaw Offset (if required) and Pitch/Roll Offset Calibration described in Section .
    c. Verfiy that calibration is reported successfully.

5.2.1.3 GFC 500 CAN Bus Errors

For CAN Bus errors in G5 and G3X installations, refer to the G5 Electronic Flight Instrument Part 23 AML STC Maintenance Manual, Garmin p/n 190-01112-11 or the G3X STC Maintenance Manual, Garmin p/n 190-02472-02 for troubleshooting.

For GI 275 installations, the following steps can help to identify issues causing CAN Bus errors.

1) Ensure the CAN bus is daisy-chained between CAN devices around the system, and CAN devices are not connected via a single point or routed through a hub device (Figure 5-2). This can cause unwanted signal reflections and “orphan” some devices on the bus and prevent their communication.

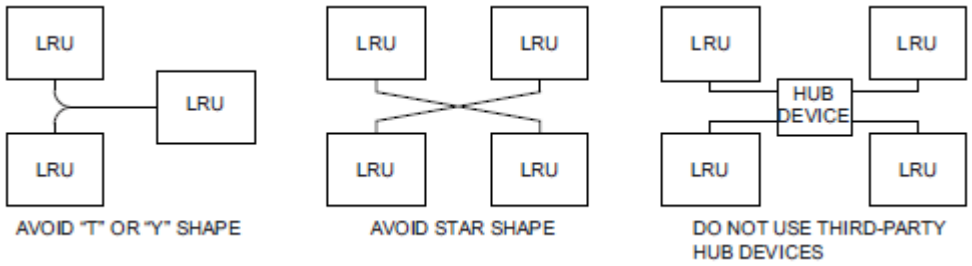

Figure 5-2 – Incorrect CAN Wiring Example

2) Ensure the CAN bus is terminated in only two locations, and only at the extreme ends of the CAN bus (Figure 5-3).

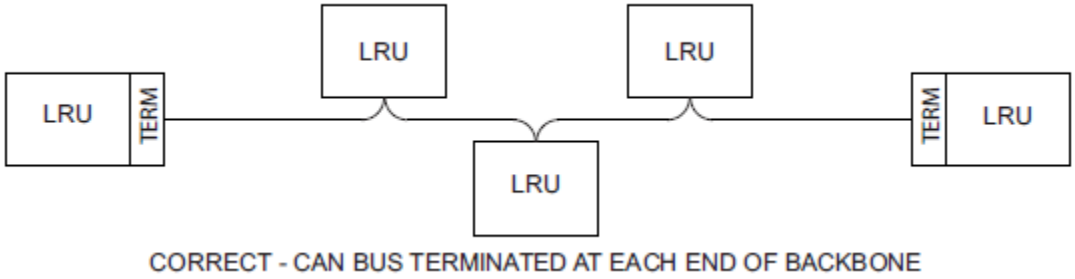

Figure 5-3 – Correct CAN Bus Terminator Example

3) With power removed, remove the CAN bus connector from one of the devices that is not located at either of the extreme ends of the CAN bus.
    a. Using an Ohm meter, verify the resistance between the CAN-H and CAN-L pins on the connector is 60 Ω. This will verify the CAN backbone is properly terminated at each end (two 120 Ω terminating resistors in parallel).
    b. A resistance of 120 Ω indicates one of the two required CAN terminations is missing or damaged.
    c. A resistance higher than 120 Ω indicates no termination at either end or damaged
    d. A resistance of 40 Ω or less indicates too many terminations are installed or terminations are damaged.
    e. If terminations are suspected to be damaged, then test them individually while not connected to the other LRUs
4) Verify the CAN-H and CAN-L signals are not swapped, shorted together, or open-circuited (between CAN HI and LO) at any LRU connector.
5) Verify the CAN-H and CAN-L signals are not shorted to ground or connector.
6) In configuration mode on the GI 275 ADI navigate to the Diagnostics → CAN Network page, select each device, and verify the value displayed for Network Error Rate is a steady 0%.
7) Power up the GI 275 ADI and one other CAN device at a time and verify the connection quality for each device. Sometimes a device will communicate only when it is the only powered device on the CAN bus if one or more of the above issues is present. Evaluating each CAN device in turn can help narrow down a problem.

Status lights are present on each GSA 28 servo. The status LED indications are listed in Table 5-1

Table 5-1 – Status LED Indications

LED Indication	Description
No Light	No Power
Steady Green	On, but not communicating via CAN Bus
Flashing Green	On and communicating via CAN Bus
Red	Hardware Fault
Alternating Red/Green	CAN bus network error two similar devices are configured with the same unit ID

5.2.2 Electric Trim (if installed)

5.2.2.1 Electric Trim Does Not Run

If the Electric Trim does not run, the following troubleshooting steps may be used to help identify the cause.

1. Check for loose terminals on the circuit breaker connections on the power wire(s) causing intermittent power connections. Also, check for intermittent circuit breakers.
2. Check that all connectors are fully seated, and that the jack screw connectors are fully tightened on both sides of all connectors.
3. Check the security of harness attachments. If the harness is able to move around during flight, the wires could pull on or vibrate the connector, causing intermittent connections.
4. Check the wiring harness for faults, defects, or shorts to ground.
5. Check that the TRIM switch wiring is correct.
6. For G5 systems:
    a. Restart the G5 ADI in configuration mode.
    b. Navigate to the Flight Controls page group.
    c. Navigate to the “Pitch Trim” page.
    d. Scroll down to the “Trim Input” line. With the trim switch not depressed, the line should read “-“. With the trim switch pressed in the NOSE DOWN direction, the line should read “Nose Down”. With the trim switch pressed in the NOSE UP direction, the line should read “Nose Up”.
7. For G3X Systems:
    a. Restart the G3X PFD in configuration mode.
    b. Navigate to the System Information Page group
    c. Select the “PTRIM” page from the Device LIst.
    d. Scroll down to the Trim input line. With the trim switch not depressed, the line should read “-“. With the trim switch pressed in the NOSE DOWN direction, the line should read “Nose Down”. With the trim switch pressed in the NOSE UP direction, the line should read “Nose Up”.
8. For GI 275 Systems:
    a. Restart the GI 275 ADI in configuration mode.
    b. Navigate to the Diagnostics, GFC 500 page
    c. Under the Switch Status heading, status is displayed for the Pitch Trim switch
    d. With the trim switch not depressed, the status line should read “-“. With the trim switch pressed in the NOSE DOWN direction, the line should read “Nose Down”. With the trim switch pressed in the NOSE UP direction, the line should read “Nose Up”
    e. If a Pitch Trim line item is not displayed under Switch Status, verify that the Pitch Trim Servo is properly configured
9. Check that the trim servo motor and clutch operate.
10. For G5 systems:
    a. Restart the G5 ADI in configuration mode.

b. Navigate to the Flight Controls page group.

c. Navigate to the “Pitch Trim” page.

d. Scroll down to the “Test Trim Movement” line and select it.

e. On the following screen, select either “Nose Up” or “Nose Down”. While the knob is held in, the trim servo clutch should engage and the trim servo should drive.

11. For G3X systems:

a. Restart the G3X in configuration mode.

b. Navigate to the Trim Page group, Pitch Trim tab.

c. Scroll down to the “Pitch Trim Movement” line and select the “Test” button.

d. On the following screen, touch and hold either “Nose Up” or “Nose Down”. While the button is pressed, the trim servo clutch should engage and the trim servo should drive

12. For GI 275 systems:

a. Restart the GI 275 in configuration mode.

b. Navigate to the Calibration/Test group, Autopilot tab.

c. Select “Test”, and then “Trim Test”.

d. On the following screen, touch and hold either the “Nose Up” or “Nose Down” arrow. While the button is pressed, the trim servo clutch should engage and the trim servo should drive

13. Verify that the trim servo is installed and rigged per the aircraft-specific Install Manual Addendum (190-02291-XX).

14. Verify that the aircraft trim system is rigged in accordance with the applicable Aircraft Maintenance Manual (AMM), Shop Manual, or Service Manual, as applicable.

5.2.2.2 Electric Trim Speed Run Time Out of Range

If the Electric Trim Speed Run Time is outside of the range specified on the model-specific Install Manual Addendum (190-02291-XX), the following troubleshooting steps may be used to help identify the cause.

1. Verify that the GFC 500 system is configured as shown on the model-specific Gain Addendum (005-01470-XX)
2. Verify that the trim servo is installed as shown on the model-specific Install Manual Addendum (190-02291-XX)
3. Verify that the aircraft trim system is rigged in accordance with the applicable Aircraft Maintenance Manual (AMM), Shop Manual, or Service Manual, as applicable.

5.3 GFC 500 Interconnect Drawings

For GFC 500 interconnect drawings reference Garmin document 190-02291-00.

5.4 Connector Layout

For GFC 500 LRU connector layout reference Garmin document 190-02291-00.

6. Equipment Removal & Installation

This section describes how to remove and replace equipment associated with this STC. After removal and replacement, the system must be configured and tested as described in Section 7. Refer to the model-specific Installation Manual Addendums for unit locations and details. Refer to the Master Drawing List, 005-01264-00 for the applicable addendum part number.

CAUTION:

When removing and/or replacing any GFC 500 component, always ensure that aircraft power is off. Unplug any auxiliary power supplies.

NOTE:

MS21044-XX self-locking nuts are for one time use only and must be replaced if removed.

Cotter pins are for one time use only and must be replaced if removed.

6.1 GMC 507

Removal:

1. De-energize the GFC 500 system by pulling the AUTOPILOT circuit breaker.
2. Insert a 3/32” hex drive tool into the left and right access holes.
3. Turn the hex drive tool counterclockwise until the tool stops.
4. Pull the unit from the rack.
5. Disconnect the electrical connector (P5071) from the GMC 507.

Reinstallation:

NOTE:

Ensure the position of the GMC 507 retention mechanism is correct by inserting a 3/32” hex drive tool into the access hole at the bottom of the face of the unit and turning the tool counterclockwise until it fully stops.

1. Visually inspect the connector and pins for signs of damage. Repair any damage.
2. Connect the electrical connector (P5071) to the GMC 507.
3. Insert a 3/32” hex drive tool into the left and right access holes.
4. Slide unit into the rack or panel cutout until it stops.
5. Gently push on the GMC 507 bezel while turning the tool clockwise until the unit is securely seated in the rack. Do not exceed 20 in-lbs. of torque.
6. Perform a functional check of the GMC 507 as required per Section 7.1.

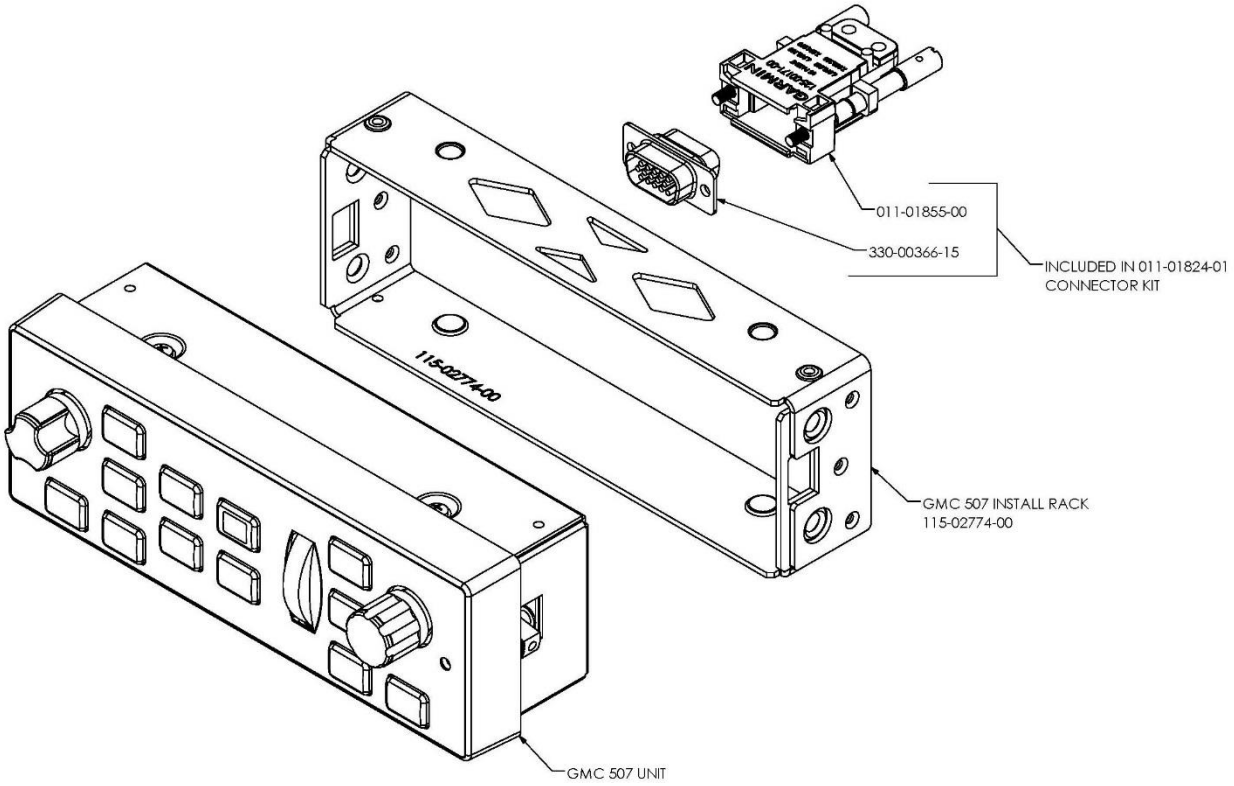

Figure 6-1 – GMC 507 Installation with rack

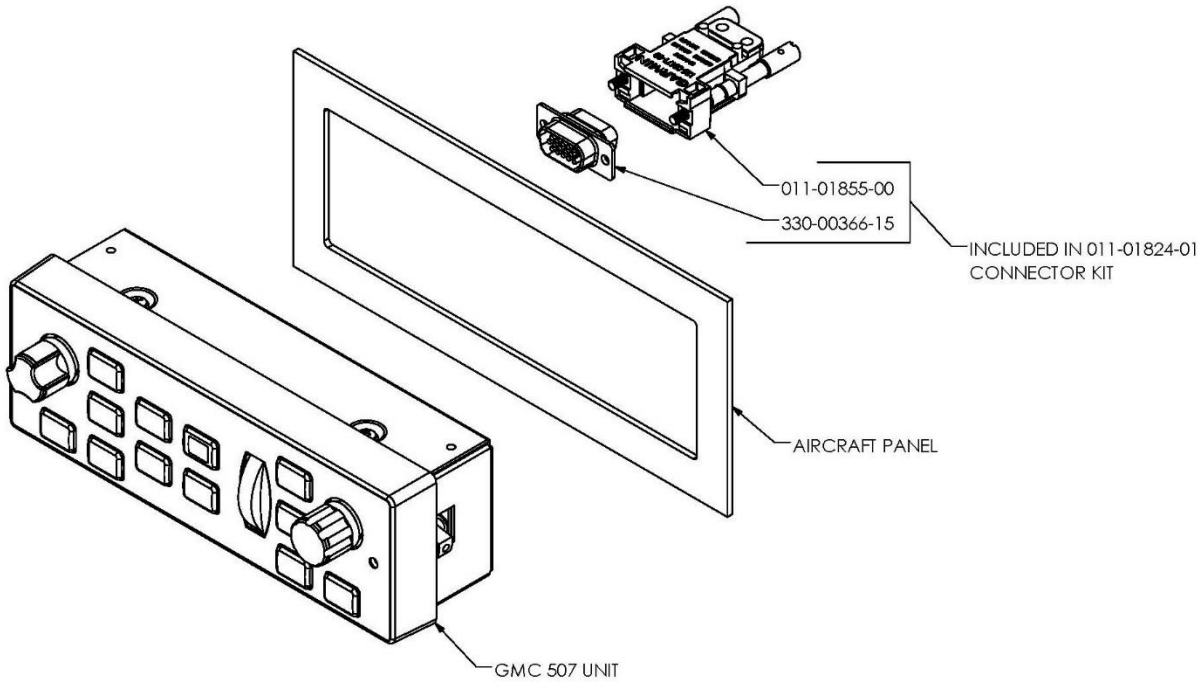

Figure 6-2 – GMC 507 Installation without rack

6.2 GSA 28 Servos

Removal:

1. Ensure that there is no electrical power to GSA 28 servos by pulling the AUTOPILOT circuit breaker and TRIM SWITCH (if installed) circuit breaker.
2. Disconnect the electrical connector from the mating connector on the servo as necessary (1P281 Roll, 2P281 Pitch, 3P281 Pitch Trim, 4P281 Yaw).
3. Disconnect the servo cables and remove the servo using the data provided in the appropriate model-specific installation manual addendum. Refer to the Master Drawing List 005-01264-00.

Reinstallation:

1. Visually inspect the connectors to ensure there are no bent or damaged pins. Repair any damage.
2. Reinstall the servo and servo cables using the data provided in the appropriate model-specific installation manual addendum. Refer to the Master Drawing List 005-01264-00.
3. Reconnect the electrical connector (1P281 for Roll, 2P281 for Pitch, 3P281 for Pitch Trim, or 4P281 for Yaw, as applicable) to the mating connector on the servo.
4. Perform a functional check of the GSA 28 per Section 7.2

6.2.1 Servo Cable Clamps

GFC 500 autopilot installations that use servo cable clamps must be installed on a corresponding cable of appropriate size. This section contains instructions for identifying servo cable clamps and how to confirm a proper fit on aircraft cables after installation.

A proper fit of the installed servo cable clamps is indicated by a minimum .005-inch gap (shown in Figure 6-3 using 2X 117-009XX-00 or 2X 117-02030-XX as reference) between each 117-part after the specified torque per the applicable STC installation manual addendum has been applied. This minimum gap ensures the clamps make proper contact with the aircraft cables.

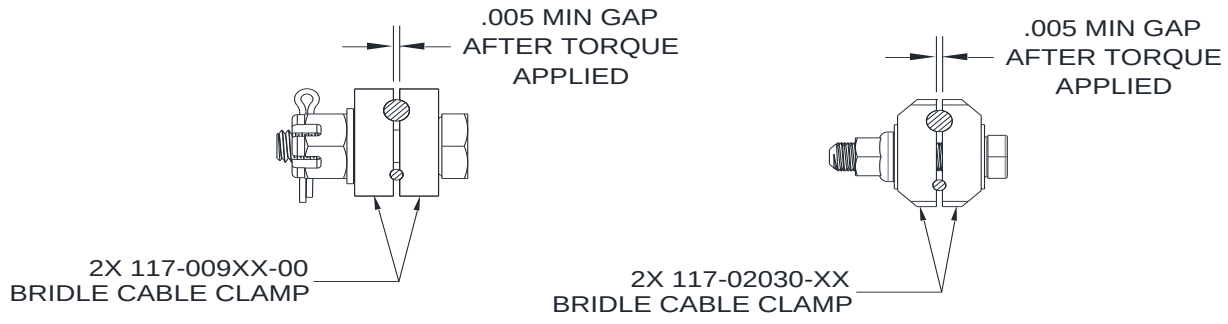

Figure 6-3 – Gap Between Clamps after Assembly

As it can be difficult to correctly identify the parts once they are removed from the packaging, the part number of the installed clamp(s) can be verified by measuring the length of the clamp and comparing to the information in Figure 6-4 below.

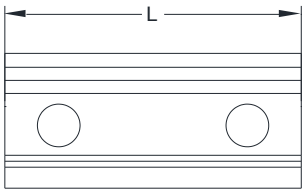

Bridle Cable Clamp (2 hole)

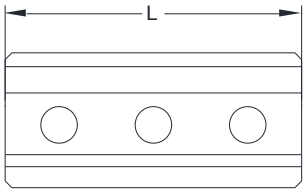

Bridle Cable Clamp (3 hole)

Bridle Cable Clamp	Main Cable Dia.	Length, L	Features
117-00164-04	.188"	1.250"	2 hole
117-01834-00	.063"	1.250"	2 hole, countersunk
117-00929-00	.063"	1.250"	2 hole
117-00930-00	.125"	1.375"	2 hole
117-00931-00	.156"	1.500"	2 hole
117-01381-00	.125"	2.000"	3 hole, countersunk
117-01412-00	.125"	2.000"	3 hole
117-01650-00	.125"	1.38"	3 hole, isolated
117-01650-01	.125"	1.38"	3 hole, countersunk, isolated
117-02030-00	.063"	1.250"	3 hole
117-02030-01	.125"	1.375"	3 hole, blue color
117-02030-02	.156"	1.500"	3 hole, black color

Figure 6-4 – Servo Cable Clamp Identification

6.3 Servo Cable Clamp Isolators

Where used, Servo Cable Clamp Isolators are integrated into the servo cable assembly. The isolators cannot be individually replaced and must be installed as part of the servo cable assembly

Removal:

1. Ensure that there is no electrical power to GSA 28 servos by pulling the AUTOPILOT circuit breaker and TRIM SWITCH (if installed) circuit breaker.
2. Disconnect and remove the servo cable using the data provided in the appropriate model-specific installation manual addendum. Refer to the Master Drawing List 005-01264-00.

Reinstallation:

1. Visually inspect the servo clamps for damage. Replace if damaged.
2. Reinstall the servo cables using the data provided in the appropriate model-specific installation manual addendum. Refer to the Master Drawing List 005-01264-00.
3. Perform a functional check of the GSA 28 per Section 7.2.

7. GFC 500 LRU Replacement/Configuration & Testing

This section provides procedures to be followed after any GFC 500 LRU is replaced. At the beginning of each LRU section, instructions are given to guide the technician for various removal/replacement scenarios. These instructions define necessary procedures to be followed for situations where original equipment was reinstalled as well as for situations where new equipment (new serial number) is installed.

7.1 GMC 507

Original GMC 507 Reinstalled

If the removed GMC 507 is reinstalled, no software loading is required. This does not include units that were returned for repair as their software is deleted during the repair testing process. Continue to GMC 507 Test Procedure, Sections 9.1.1 and 9.3.2.

New Repair or Exchange GMC 507 Installed

If a new, repaired or exchanged GMC 507 is installed, the correct software must be loaded to the unit. Refer to Section 8.1 for software loading procedures. Continue to the GMC 507 Test Procedure, Sections 9.1, 9.1.1, and 9.3.2.

7.2 GSA 28 Servo

Original GSA 28 Reinstalled

No software loading is required if the removed GSA 28 is re-installed. This does not include units that were returned for repair as their software is deleted during the repair testing process. Continue to the applicable GSA 28 Test Procedure for the servo that was replaced:

Section 9.1.1 and 9.3.1.1 for Roll Servo

Section 9.1.1 and 9.3.1.2 for Pitch Servo

Section 9.1.1 and 9.3.1.3 for Pitch Trim Servo

Section 9.1.1 and 9.3.1.4 for Yaw Damper Servo

New, Repaired or Exchange GSA 28 Installed

If a new, repaired or exchanged GSA 28 is installed, the correct software must be loaded to the unit. Refer to Section 8.1 for software loading procedures. Continue to the applicable GSA 28 Test Procedure for the servo that was replaced:

Section 9.1.1 and 9.3.1.1 for Roll Servo

Section 9.1.1 and 9.3.1.2 for Pitch Servo

Section 9.1.1 and 9.3.1.3 for Pitch Trim Servo

Section 9.1.1 and 9.3.1.4 for Yaw Damper Servo

8. GFC 500 Software Load and Configuration Procedures

8.1 GMC 507 and GSA 28 Software Loading

1. Apply power to the G5/G3X/GI 275 and GFC 500 system.
2. For G5 and G3X installations, on power-up, the GMC 507 and GSA 28 software versions are checked by the system. If there is a mismatch (due to a replaced unit), the correct software is automatically loaded to the unit(s) from the G5 or G3X. Refer to the *Garmin G5 Electronic Flight Instrument Part 23 AML STC Maintenance Manual including ICA,* p/n 190-01112-11 if the G5 was replaced or to the *Garmin G3X Touch Electronic Flight Instrument System Part 23 AML STC Maintenance Manual including ICA, p/n 190-02472-02 if the G3X PFD was replaced*.
3. For GI 275 Installations, on power-up, the GMC 507 and GSA 28 software versions are checked by the system. If there is a mismatch (due to a replaced unit), a system message will be displayed and PFT will fail. To load software onto the mismatched LRU reference the software loading procedure in the *GI 275 Part 23 AML STC Maintenance Manual*, p/n 190-02246-11.

8.2 GFC 500 System Configuration

For configuration items not related to the GFC 500 Automatic Flight Control System, refer to the *Garmin G5 Electronic Flight Instrument Part 23 AML STC Maintenance Manual including ICA,* p/n 190-01112-11, the *Garmin G3X Touch Electronic Flight Instrument System Part 23 AML STC Maintenance Manual including ICA, p/n 190-02472-02, or the GI 275 Part 23 AML STC Maintenance Manual/ICA, p/n 190-02246-11*.

NOTE: *The G5 must be configured in accordance with the Garmin G5 Electronic Instrument Part 23 AML STC Installation Manual **prior** to configuring the GFC 500 Autopilot.*

NOTE: *The G3X must be configured in accordance with the Garmin G3X AML STC IM **prior** to configuring the GFC 500 Autopilot.*

NOTE: *The GI 275 must be configured in accordance with the GI 275 AML STC IM **prior** to configuring the GFC 500 Autopilot.*

NOTE: *To start the G5 in configuration mode, hold down the knob while powering on the G5. Configuration selections are made by rotating and pressing the knob on the face of the G5 as necessary to select the correct configurations. Each configuration item is saved as it is made.*

NOTE: *To start the G3X in configuration mode, hold down the MENU button while powering on the G3X. Configuration selections are made through the G3X as necessary to select the correct configurations. Each configuration item is saved as it is made.*

NOTE: *To start the GI 275 in configuration mode, hold down the knob while powering on the GI 275. Configuration selections are made by rotating and pressing the knob on the face of the GI 275 or navigating the touch screen as necessary to select to the correct configurations. Each configuration item is saved as it is made. A "Copy Config From GI 275 To GFC 500" button is provided to update configuration items saved on GFC 500 LRUs. It is best practice to always press this button after any GFC 500 configuration change*

Configure the GFC 500 Autopilot as shown on the aircraft-specific gain addendum (005-01470-XX). Refer to the Master Drawing List 005-01264-00 for the correct gain addendum part number.

When entering GFC 500 gains on a GI 275, press the *"Copy Config From GI 275 To GFC 500"* button after all gains have been entered.

9. GFC 500 Return to Service Procedure

The following sections will verify the proper operation of the GFC 500 Autopilot after maintenance has been performed on the system. Operational information regarding the GFC 500 Autopilot can be found in the G5 Electronic Flight Instrument Pilot's Guide for Certified Aircraft, p/n 190-01112-12, the G3X Touch Pilot's Guide for Certified Aircraft, p/n 190-02472-00, or the GI 275 Pilot's Guide, p/n 190-02246-01.

9.1 Yaw Offset and Pitch/Roll Offset Calibration

Perform the following procedures if the GMC 507 is replaced or when the GMC 507 rack is removed or loosened.

NOTE: *If the G5 ADI has been replaced, perform the G5 pitch/roll offset procedures outlined in Garmin G5 Electronic Flight Instrument Part 23 AML STC Maintenance Manual including ICA,* p/n 190-01112-11 *before completing this section.*

NOTE: *If the G3X system ADAHRS has been replaced, perform the pitch/roll offset procedures outlined in Garmin G3X Touch Electronic Flight Instrument System Part 23 AML STC Maintenance Manual including ICA,* p/n 190-02472-02 *before completing this section.*

NOTE: *If the GI 275 ADI has been replaced, perform the GI 275 pitch/roll offset procedures outlined in GI 275 Part 23 AML STC Maintenance Manual/ICA,* p/n 190-02246-11 *before completing this section.*

9.1.1 G5 Systems

1. Start the G5 ADI in configuration mode by pressing and holding the knob while applying power to the system.
2. If the GMC 507 is installed in a panel that is perpendicular to the aircraft forward motion, skip to step 6. If the GMC 507 is installed in a panel which is not perpendicular to the aircraft forward motion (i.e. in a canted panel), Navigate to the Flight Controls -> Mode Control Panel -> Calibrate Yaw Offset page and press the knob.
3. Scroll through the yaw offset calibration pages, following the instructions on each page to ensure that the system is ready for calibration.
4. Select the appropriate value of yaw offset and press the knob.
5. When the test is complete, select Done to return to the Flight Controls -> Mode Control Panel page.
6. Navigate to the Flight Controls -> Mode Control Panel -> Calibrate Pitch/Roll page and press the knob.
7. Scroll through the pitch/roll calibration pages, following the instructions on each page to ensure that the system is ready for calibration.
8. Select Calibrate to start the calibration process.
9. When the test is complete, select Done to return to the Flight Controls -> Mode Control Panel page.

9.1.2 G3X Systems

1. Start the G3X PFD in configuration mode by pressing and holding the MENU button while applying power to the system.
2. If the GMC 507 is installed in a panel that is perpendicular to the aircraft forward motion, skip to step 6. If the GMC 507 is installed in a panel which is not perpendicular to the aircraft forward motion (i.e. in a canted panel), Navigate to the Autopilot page group, General tab and touch the value on the Mode Control Panel Yaw Offset row.
3. Follow the on-screen instructions.
4. Select the appropriate value of yaw offset.
5. When the value is entered, select Save to return to the Autopilot page group, General Tab.
6. Touch the “Calibrate” button on the Mode Control Panel Pitch/Roll row.
7. Select Calibrate to start the calibration process.
8. When the process is complete, select Done to return to the Autopilot page group, General Tab.
9. Restart the G3X System in normal mode.

9.1.3 GI 275 Systems

1. Start the GI 275 ADI in configuration mode by pressing and holding the knob while applying power to the system.
2. If the GMC 507 is installed in a panel that is perpendicular to the aircraft forward motion, skip to step 6. If the GMC 507 is installed in a panel which is not perpendicular to the aircraft forward motion (i.e. in a canted panel), Navigate to the Calibration/Test -> Autopilot -> Calibration -> Calibrate Yaw.
3. Scroll through the yaw offset calibration pages, following the instructions on each page to ensure that the system is ready for calibration.
4. Select Start, Select the appropriate value of yaw offset, and press the Enter.
5. When the test is complete, select Done to return to the Calibration/Test -> Autopilot -> Calibration page.
6. Navigate to the Calibration/Test -> Autopilot -> Calibration -> Calibrate Pitch/Roll page
7. Scroll through the pitch/roll calibration pages, following the instructions on each page to ensure that the system is ready for calibration.
8. Select Start to begin the calibration process.
9. When the test is complete, select Done to return to the Calibration/Test -> Autopilot -> Calibration page.
10. Navigate back to the root configuration Page.
11. Select Restart Options -> Restart All to Normal and then Yes to restart the all GI 275s in normal mode.

9.2 Pre-Flight Test (PFT)

Pre-Flight Test (PFT) is accomplished automatically by the GFC 500 Autopilot after the system is powered up in normal mode.

1. Apply electrical power to the aircraft.
2. Verify that the G5, G3X PFD, or GI 275 displays PFT on the display during PFT.
3. Verify that at the conclusion of PFT, the PFT annunciation is removed from the G5, G3X PFD, or GI 275.
4. Disable any GPS navigator or antenna providing signal to the G5, G3X, or GI 275 by pulling its circuit breaker or by ensuring that the antenna is not receiving any GPS signal.
5. Using an air data test set, apply 35-40 knots of airspeed.
6. Verify that the ESP roll indices are displayed at the appropriate left and right roll attitude on the G5, the G3X PFD, or the GI 275. Refer to the appropriate model-specific installation manual addendum for model specific information on the placement of the roll indices.
   Note: When on ground, roll indices displayed on the GI 275 may be obscured. Identifying any portion of the indices is acceptable.
7. Return the air data test set to ambient pressure.
8. Enable the GPS providing signal to the G5, G3X, and/or GI 275.

9.3 Normal Mode Tests

The tests in the following sections are performed with the system in normal mode.

NOTE: Throughout the following sections:

1. A normal autopilot disconnect will be accompanied by a normal disconnect aural alert (three high-low tones approximately three seconds in duration) through the cockpit speaker(s) and headphones and a continuous tone from the sonalert for approximately three seconds (if installed).
2. An abnormal disconnect will be accompanied by an abnormal disconnect aural alert (continuous high-low tones) through the cockpit speaker(s) and headphones and a continuous tone from the sonalert (if installed). The abnormal disconnect tones can be cancelled by pressing the AP button on the GMC 507, the knob on the G5 (if installed), the AP DISC/TRIM INT switch on the pilot's flight controls, by touching the Autopilot Status bar on the G3X PFD (if installed), or by pressing the knob on the GI 275 (if installed).
3. If the aircraft is not equipped with a pitch trim servo, disregard the steps for pitch trim servos.
4. Depending on the aircraft and the control system, the pitch trim may run automatically at any time while the autopilot is engaged. If it gets to the end of its travel, an amber TRIM annunciation may appear.
5. If the aircraft is not equipped with a yaw damper servo, disregard the steps for yaw damper servos.
6. If the aircraft is configured for miles per hour (MPH) instead of knots (kts), utilize MPH as the unit in any step that references kts. Conversion of value is not required.

9.3.1 Servo Tests

If a servo has been removed and reinstalled (or replaced), perform the following steps.

1. Load software as shown in Section 8.1.
2. Power the GFC 500 in normal mode.
3. Complete Pre-Flight Test (PFT) as shown in Section 9.1.3.
4. Proceed to the sub-section below as appropriate for the servo that has been replaced.

9.3.1.1 Roll Servo Functional Check

1. Verify that the steps in Section 9.3.1 have been completed.
2. Center the heading bug on the aircraft heading.
3. Engage the autopilot by pressing the AP button on the GMC 507.
4. Verify that the roll control is restricted from free movement.
5. Press the HDG button to engage roll mode.
6. Rotate the heading bug to the left of the current aircraft heading.
7. Ensure that the command bars indicate a left roll and that the servo drives the flight controls to the left.
8. Rotate the heading bug to the right of the current aircraft heading.
9. Ensure that the command bars indicate a right roll and that the servo drives the flight controls to the right.
10. Firmly grasp the control wheel and press the AP DISC/TRIM INT switch on the pilot's flight controls.
11. Verify that the autopilot disconnects and the roll control moves freely.

9.3.1.2 Pitch Servo Functional Check

1. Verify that the steps in Section 9.3.1 have been completed.
2. Center the elevator controls approximately mid-travel.
3. Engage the autopilot by pressing the AP button on the GMC 507.
4. Verify that the pitch control is restricted from free movement.
5. Rotate the NOSE UP/DN thumbwheel on the GMC 507 UP three clicks.
6. Ensure that the flight director command bars indicate a pitch up and that the pitch servo drives the controls in a nose up direction. **NOTE:** *In some aircraft, some assistance may be needed to drive the flight controls against any counterweight or springs.*
7. Rotate the NOSE UP/DN thumbwheel on the GMC 507 DN three clicks.
8. Apply continuous forward pressure on the pitch control in a nose down direction.
9. Ensure that TRIM UP is displayed on the G5, G3X PFD, or GI 275.
10. Apply continuous aft pressure to the flight controls in a nose up direction.
11. Ensure that TRIM DN is displayed on the G5, G3X PFD, or GI 275.
12. Rotate the NOSE UP/DN thumbwheel on the GMC 507 DN three clicks.

13. Ensure that the flight director command bars indicate a pitch down and that the pitch servo drives the controls in a nose down direction.
14. Firmly grasp the control wheel and press the AP DISC/TRIM INT switch on the pilot's flight controls.
15. Verify that the autopilot disconnects and the pitch control moves freely.

9.3.1.3 Pitch Trim Servo Functional Check (If Installed)

1. Verify that the steps in Section 9.3.1 have been completed.
2. Press the TRIM switch on the pilot's flight controls in the NOSE UP direction.
3. Verify that the trim runs in the nose up direction.
4. While the trim is running, depress the AP DISC/TRIM INT switch on the pilot's flight controls and verify that the pitch trim stops running.
5. Press the TRIM switch on the pilot's flight controls in the NOSE DN direction.
6. Verify that the trim runs in the nose down direction.
7. Adjust the trim all the way to the nose down stop.
8. While monitoring elapsed time, actuate the TRIM Switch on the pilot's flight controls in the NOSE UP direction until the trim runs against the nose up mechanical stop.
9. Verify that the elapsed time for full travel of the pitch trim is within the range specified in the appropriate model-specific installation manual addendum (190-02291-XX). If the elapsed time is not within the specified range, refer to Section 5.2 in this manual.
10. While monitoring elapsed time, actuate the TRIM Switch on the pilot's flight controls in the NOSE DN direction until the trim runs against the nose down mechanical stop.
11. Verify that the elapsed time for full travel of the pitch trim is within the range specified in the appropriate model-specific installation manual addendum (190-02291-XX). If the elapsed time is not within the specified range, refer to Section 5.2 in this manual.

9.3.1.4 Yaw Damper Functional Check (if Installed)

1. Verify that the steps in Section 9.3.1 have been completed.
2. Engage the Yaw Damper by pressing the YD button the GMC 507.
3. Verify that resistance if felt in the rudder pedals.

9.3.2 GFC 500 Functional Checks

Perform the following test procedures when the GMC 507 is replaced.

9.3.2.1 Autopilot Switch Checks

1. Power up the system in normal mode.
2. Complete Pre-Flight Test (PFT) as shown in Section 9.1.3.
3. Actuate the TRIM switch on the pilot's flight controls in the nose down (forward) direction.
4. Verify that the Pitch Trim Servo engages and drives the airplane trim system in a Nose Down direction.
5. Release the TRIM Switch.
6. Actuate the TRIM switch on the pilot's flight controls in the nose up (aft) direction.
7. Verify that the Pitch Trim Servo engages and drives the airplane trim system in a Nose Up direction.
8. Release the TRIM switch.
9. Engage the Autopilot by pressing the AP button on the GMC 507.
10. Press the AP DISC/TRIM INT switch on the pilot's flight controls.
11. Verify that the autopilot disengages.
12. Engage the Autopilot by pressing the AP Button on the GMC 507.
13. Press the AP button on the GMC 507.
14. Verify that the autopilot disengages but the YD remains engaged.
15. Press the AP DISC/TRIM INT switch on the pilot's flight controls
16. Press the GO AROUND switch.
17. Verify the following:
    a. TO is annunciated for both lateral and vertical modes on the G5, G3X PFD, or GI 275.
    b. The flight director command bars are displayed and indicate wings level and pitch up to the angle as shown on the appropriate Gain Addendum (005-01470-XX).
18. Press the FD button on the GMC 507.
19. Verify that the flight director command bars are no longer displayed.

9.3.2.2 Manual Electric Pitch Trim Speed Check

1. Manually adjust pitch trim fully against either mechanical stop.
2. Actuate the TRIM switch on the pilot's flight controls until the trim runs against the other mechanical stop while monitoring the run time.
3. Verify that the elapsed time for full travel of the pitch trim is within the range specified on the appropriate model-specific installation manual addendum (190-02291-XX). If the elapsed time is not within the specified range, refer to Section 5.2 in this manual.
4. Repeat the test in the opposite direction.

9.3.2.3 Interface Checks

NOTE: *Ensure that the flight controls are in a neutral position before performing the following checks.*

1. Set the heading bug to the current aircraft heading.
2. Engage the autopilot by pressing the AP button on the GMC 507.
3. Verify that ROL and PIT are displayed on the G5, G3X PFD, or GI 275.
4. Verify that the flight director command bars are displayed in level pitch and roll attitude.
5. Press the HDG button on the GMC 507 to engage heading mode.
6. Verify that HDG replaces ROL on the G5, G3X PFD, or GI 275.
7. Adjust the heading bug to the left of the aircraft heading.
8. Verify that the flight director command bars indicate a left turn, and that the flight controls move toward the left.
9. Adjust the heading bug to the right of the aircraft heading.
10. Verify that the flight director command bars indicate a right turn, and that the flight controls move toward the right.
11. Center the heading bug at the aircraft heading.
12. Click the UP/DN thumbwheel on the GMC 507 UP four times.
13. Verify that the command bars indicate a fly up command and that the flight controls drive in the pitch up direction. Note: In some aircraft, it may be necessary to counteract any counterweight or control system springs to assist the servo.
14. Click the UP/DN thumbwheel on the GMC 507 DN eight times.
15. Verify that the command bars indicate a fly down command and that the flight controls drive in the pitch down direction.
16. Press the AP DISC/TRIM INT switch to disengage the autopilot.
17. Press the FD button to remove the flight director bars from the G5, G3X PFD, or GI 275.

9.3.2.4 VOR Mode Check

1. Set the Course pointer on the CDI 15 degrees to the left of aircraft heading and ensure that the CDI is displaying VOR navigation information.
2. Simulate a VOR signal with a “TO” course equal to the aircraft heading.
3. Engage the autopilot by pressing the AP button on the GMC 507.
4. Verify ROL and PIT are displayed on the G5, G3X PFD, or GI 275.
5. Press the NAV button on the GMC 507.
6. Verify that VOR is displayed in white with ROL, AP, YD, and PIT in green on the G5, G3X PFD, or GI 275.
7. Verify that the flight director command bars are displayed in level pitch and roll attitude.
8. Slowly adjust the course pointer on the CDI toward the aircraft heading.
9. When the course pointer is within approximately five degrees of the aircraft heading, verify that that VOR displays green on the G5, G3X PFD, or GI 275 and that ROL is not displayed on the G5, G3X PFD, or GI 275.
10. Center course pointer on the aircraft heading.
11. Adjust the simulated course 20 degrees to the left of current aircraft heading.
12. Verify that the flight director command bars indicate a left turn and that the flight controls move toward a left turn.
13. Adjust simulated course to aircraft heading.
14. Adjust the simulated course on the nav test set 20 degrees to the right of current aircraft heading.
15. Verify that the flight director command bars indicate a right turn and that the flight controls move toward a right turn.
16. Adjust the simulated course to aircraft heading.
17. Press the NAV button on the GMC 507.
18. Verify ROL and PIT are displayed on the G5, G3X PFD, or GI 275.
19. Press the AP DISC/TRIM INT switch to disengage the autopilot.
20. Press the FD button to remove the flight director bars from the G5, G3X PFD, or GI 275.

9.3.2.5 GPS Mode Check

1. On the GPS Navigator, enter a Direct-To flight plan to an airport that is generally in front of the aircraft.
2. Ensure GPS is displayed as the active navigation source on the G5, G3X PFD, or GI 275.
3. Engage the autopilot by pressing the AP button on the GMC 507.
4. Verify that ROL and PIT are displayed on the G5, G3X PFD, or GI 275.
5. Press the NAV button on the GMC 507.
6. Verify that GPS replaces ROL on the G5, G3X PFD, or GI 275.
7. Select OBS mode on the GPS navigator.
8. Adjust the OBS 3 degrees higher than the current DTK (Example: If the DTK is 272 degrees, adjust the OBS to 275 degrees).
9. Verify that the CDI moves to the left.
10. Verify that the flight director command bars indicate a left turn and that the flight controls drive to the left.
11. Adjust the OBS three degrees lower than the current DTK.
12. Verify that the CDI moves to the right.
13. Verify that the flight director command bars indicate a right turn and that the flight controls drive to the right.
14. Press the AP DISC/TRIM INT switch to disengage the autopilot.
15. Press the FD button to remove the flight director bars from the G5, G3X PFD, or GI 275.

9.3.2.6 ILS APR Checks

1. Simulate an ILS (Localizer and Glideslope) using a ramp tester.
2. Tune the NAV radio to the Localizer frequency
3. Set the G5, G3X, or GI 275 to display the ILS.
4. Set the signal generator to simulate 0.093 DDM Left and 0.091 DDM Up signals.
5. Adjust the course pointer to aircraft heading.
6. Engage the autopilot by pressing the AP button on the GMC 507.
7. Verify ROL and PIT are displayed on the G5, G3X PFD, or GI 275.
8. Press the APR button on the GMC 507.
9. Verify LOC and GS are displayed in white on the G5, G3X PFD, or GI 275.
10. Slowly center the LOC deviation on the test set.
11. Verify that LOC turns green and ROL is extinguished on the G5, G3X PFD, or GI 275.
12. Slowly center the GS deviation on the test set.
13. Verify that GS turns green and PIT is extinguished on the G5, G3X PFD, or GI 275.
14. Apply left LOC deviation on the test set.
15. Verify that the flight director command bars indicate a left turn and that the flight controls turn to the left.

16. Apply right LOC deviation on the test set.
17. Verify that the flight director command bars indicate a right turn and that the flight controls turn to the right.
18. Center the LOC deviation on the test set.
19. Apply up GS deviation on the test set.
20. Verify that the flight director command bars indicate a pitch up and that the flight controls drive in the pitch up direction.
21. Apply down GS deviation on the test set.
22. Verify that the flight director command bars indicate a pitch down and that the flight controls drive in the pitch down direction.
23. Center the GS deviation on the test set.
24. Press the AP DISC/TRIM INT switch to disengage the autopilot.
25. Press the FD button to remove the flight director bars from the G5, G3X PFD, or GI 275.

9.3.2.7 IAS Mode Check

An air data test set is required for this section

NOTE: *Disable any ADS-B Transmitting equipment for this test to avoid interference with air traffic control.*

1. An air data test set is required for this section.
2. Set the air data test set to 3000 ft. altitude and 120 kts airspeed.
3. Engage the autopilot by pressing the AP button on the GMC 507.
4. Verify ROL and PIT are displayed on the G5, G3X PFD, or GI 275.
5. Press the IAS button on the GMC 507.
6. Verify that IAS is displayed in green and PIT extinguishes on the G5, G3X PFD, or GI 275.
7. Verify that 120 KT (+/- 2 KT) is displayed to the right of IAS on the G5, G3X PFD, or GI 275.
8. Rotate the UP/DN thumbwheel on the GMC 507 UP until 100 KT is displayed to the right of IAS on the G5, G3X PFD, or GI 275.
9. Verify that the flight director command bars indicate a pitch up command and the flight controls respond in a nose up direction.
10. Rotate the UP/DN thumbwheel on the GMC 507 DN until 140 KT is displayed to the right of IAS on the G5, G3X PFD, or GI 275.
11. Verify that the flight director command bars indicate a pitch down command and the flight controls respond in a nose down direction.
12. Rotate the UP/DN thumbwheel on the GMC 507 UP until 120 KT is displayed on the G5, G3X PFD, or GI 275.
13. Verify that the flight director command bars indicate level pitch attitude.
14. Adjust the air data test set for 100 kts airspeed.
15. Verify that the flight director command bars indicate a pitch down command and the flight controls respond in a nose down direction.

16. Adjust the air data test set for 140 kts airspeed.
17. Verify that the flight director command bars indicate a pitch up command and the flight controls respond in a nose up direction.
18. Return the air data test set to 3000 ft. altitude and 120 kts airspeed.
19. Press the IAS button on the GMC 507 to deselect IAS mode.
20. Verify that PIT illuminates in green on the G5, G3X PFD, or GI 275.
21. Press the AP DISC/TRIM INT switch to disengage the autopilot.
22. Press the FD button to remove the flight director bars from the G5, G3X PFD, ro GI 275.

9.3.2.8 VS Mode Check

NOTE: *Disable any ADS-B Transmitting equipment for this test to avoid interference with air traffic control.*

1. Set the air data test set to 3000 ft. altitude and 120 kts airspeed, if not already there.
2. Engage the autopilot by pressing the AP button on the GMC 507.
3. Verify ROL and PIT are displayed on the G5, G3X PFD, or GI 275.
4. Press the VS button on the GMC 507 to engage VS mode
5. Verify VS is displayed in green and PIT extinguishes on the G5 or G3X PFD.
6. For G5 or G3X installations, verify that +0 is displayed to the right of VS on the G5 and that the VS bug setting is shown at the bottom right of the G5 or in the autopilot mode annunciation bar on the G3X PFD. For GI 275 installations, verify that 0.0 is displayed to the right of VS.
7. Rotate the UP/DN thumbwheel on the GMC 507 UP until +1000 FPM is displayed on the G5, G3X PFD, or GI 275.
8. Verify that the flight director command bars indicate pitch up and the flight controls respond in the direction of the command bars.
9. Rotate the UP/DN thumbwheel on the GMC 507 DN until -1000 FPM is displayed on the G5, G3X PFD, or GI 275.
10. Verify that the flight director command bars indicate pitch down and the flight controls respond in the direction of the command bars.
11. Rotate the UP/DN thumbwheel on the GMC 507 UP until 0 FPM is displayed on the G5, G3X PFD, or GI 275.
12. Verify that the flight director command bars indicate level pitch attitude and the flight controls are centered in pitch and roll.
13. Set the air data test set for 4000 ft. altitude at a vertical speed of 1000 fpm.
14. Verify that the flight director command bars indicate pitch down and the flight controls respond in the direction of the command bars.
15. Set the air data test set for 2000 ft. altitude at a vertical speed of 1000 fpm.
16. Verify that the flight director command bars indicate pitch up and the flight controls respond in the direction of the command bars.
17. Set the air data test set for 3000 ft. altitude and 120 kts airspeed.
18. Press the VS button on the GMC 507 to deselect VS mode.

19. Verify that PIT illuminates in green on the G5, G3X PFD, or GI 275 and that the VS bug is removed from the G5, G3X PFD, or GI 275.
20. Press the AP DISC/TRIM INT switch to disengage the autopilot.
21. Press the FD button to remove the flight director bars from the G5, G3X PFD, or GI 275.

9.3.2.9 ALT Mode Check

NOTE: *Disable any ADS-B Transmitting equipment for this test to avoid interference with air traffic control.*

1. Set the air data test set to 3000 ft. altitude and 120 kts airspeed, if not already there.
2. Press the AP button on the GMC 507 to engage the autopilot.
3. Verify ROL and PIT are displayed on the G5, G3X PFD, or GI 275.
4. Press the ALT button on the GMC 507 to select ALT mode.
5. Verify ALT is displayed in green and PIT extinguishes on the G5, G3X PFD, or GI 275.
6. Verify that 3000 (+/- 120) is displayed to the right of ALT on the G5, G3X PFD, or GI 275.
7. Adjust the air data test set for 3500 ft. altitude.
8. Verify that the flight director command bars indicate a pitch down and the flight controls respond in the direction of the command bars.
9. Adjust the air data test set for 2500 ft. altitude.
10. Verify that the flight director command bars indicate pitch up and the flight controls respond in the direction of the command bars.
11. Return the air data test set to 3000 ft. altitude and 120 kts airspeed.
12. Press the ALT button on the GMC 507 to deselect ALT mode.
13. Verify that PIT illuminates in green on the G5, G3X PFD, or GI 275.
14. Press the AP DISC/TRIM INT switch to disengage the autopilot.
15. Press the FD button to remove the flight director bars from the G5, G3X PFD, or GI 275.

9.3.2.10 ALTS Mode Check

NOTE: *Disable any ADS-B Transmitting equipment for this test to avoid interference with air traffic control.*

1. Set the air data test set to 3000 ft. altitude and 120 kts airspeed, if not already there.
2. Set the selected altitude on the G5, G3X PFD, or GI 275 to 3500 ft.
3. Press the AP button on the GMC 507 to engage the autopilot.
4. Verify green ROL, AP, YD, PIT, and white ALTS are displayed on the G5, G3X PFD, or GI 275.
5. Adjust the air data test set for 3500 ft. altitude at a vertical speed of 500 fpm.
6. When the altitude reaches 3400 +/- 20 feet, verify that Green ALTS flashes for approximately 3 seconds in place of PIT on the G5, G3X PFD, or GI 275 and then displays steady and that White ALT is displayed to the right of ALTS on the G5, G3X PFD, or GI 275.

7. When the altitude reaches 3450 +/- 20 feet, verify that Green ALT flashes for approximately 3 seconds in place of ALTS on the G5, G3X, or GI 275 and then displays steady.

NOTE:

The flight director command bars and flight controls may move up or down as the GFC 500 Autopilot is capturing the selected altitude.

8. Adjust the air data test set for 4000 ft. altitude at a vertical speed of 500 fpm.
9. Verify that the flight director command bars indicate a pitch down and the flight controls respond in the direction of the command bars.
10. Adjust the air data test set for 3000 ft. altitude at a vertical speed of 500 fpm.
11. Verify that the flight director command bars indicate a pitch up and the flight controls respond in the direction of the command bars when the altitude goes below 3500 ft.
12. Return the air data test set to 3000 ft. altitude and 120 kts airspeed.
13. Allow the air data test set to stabilize at the target altitude and airspeed.
14. Adjust the selected altitude on the G5, G3X PFD, or GI 275 to 0 FT.
15. Press the ALT button on the GMC 507 to deselect ALT mode.
16. Verify PIT is displayed in place of ALT on the G5, G3X PFD, or GI 275 with ALTS in white to the right of PIT on the G5 or G3X PFD.
17. Press the AP DISC/TRIM INT switch to disengage the autopilot.
18. Press the FD button to remove the flight director bars from the G5, G3X PFD, or GI 275.
19. Return the air data test set to field elevation and 0 kts airspeed.

9.3.2.11 LVL Mode Check

1. Set the heading bug to the aircraft heading.
2. Press the FD button on the GMC 507 to engage the flight director.
3. Verify ROL and PIT are displayed on the G5, G3X PFD, or GI 275.
4. Press the HDG button on the GMC 507 to select heading mode.
5. Verify HDG and PIT are illuminated in green and ROL is extinguished on the G5, G3X PFD, or GI 275.
6. Adjust the heading bug to the left.
7. Verify that the flight director command bars indicate a left turn command.
8. Rotate the UP/DN thumbwheel on the GMC 507 UP four times.
9. Verify that the flight director command bars indicate a pitch up command.
10. Press the LVL button on the GMC 507.
11. Verify that LVL and LVL are displayed in green and HDG and PIT are extinguished on the G5, G3X PFD, or GI 275.
12. Verify that the flight director command bars show level attitude and that the autopilot engages.
13. Press the AP DISC/TRIM INT switch to disengage the autopilot.
14. Press the FD button to remove the flight director bars from the G5, G3X PFD, or GI 275.

Appendix A. Installation Specific Information

A copy of this appendix must be used to record information for a specific installation of the GFC 500 Autopilot system. The completed copy must be kept with the aircraft permanent records. This appendix includes the following information:

- General installation information
- Interfaced equipment
- GFC 500 Autopilot wiring diagrams

Additionally, retain a printed copy of the Model-Specific Gain Addendum (005-01470-XX) used to configure the installed GFC 500. This printed copy must be kept with the aircraft permanent records.

A.1. General Installation Information

Aircraft

Aircraft Make and Model _____

Serial Number _____

Registration Number _____

GMC 507 Autopilot Mode Controller

Part Number _____

Serial Number _____

Mod Level _____

GSA 28 Pitch Servo

Part Number _____

Serial Number _____

Mod Level _____

GSA 28 Roll Servo

Part Number _____

Serial Number _____

Mod Level _____

GSA 28 Pitch Trim Servo (if installed)

Part Number _____

Serial Number _____

Mod Level _____

GSA 28 Yaw Damper Servo (if installed)

Part Number _____

Serial Number _____

Mod Level _____

A.2. Equipment Locations and Wiring

For the locations of installed equipment, refer to the appropriate Install Manual Addendum (190-02291-XX).

Record equipment locations and sketch the approximate location of wire routing in or as applicable.

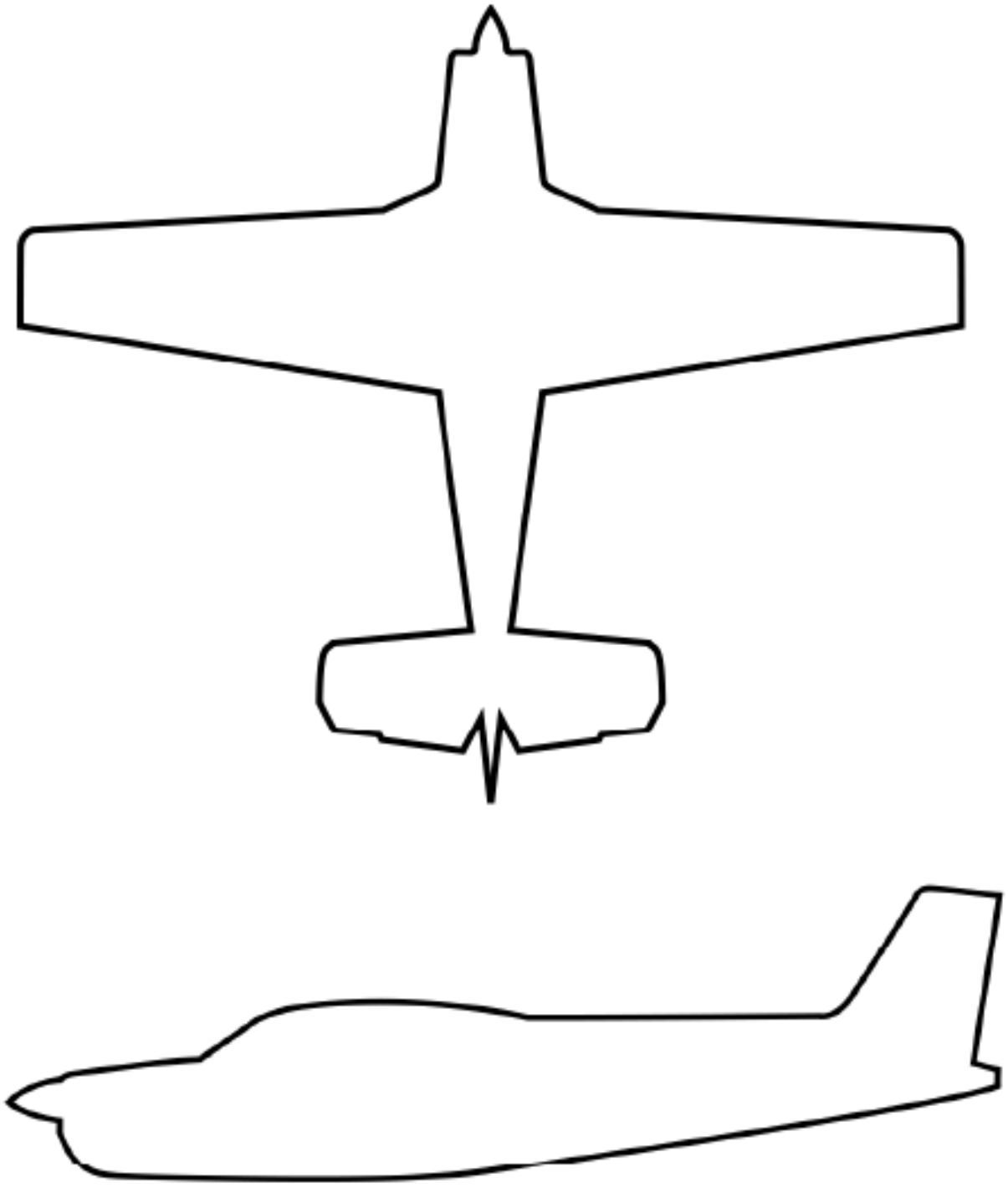

Figure A-1 – Equipment Location and Wire Routing – Single Engine Airplane

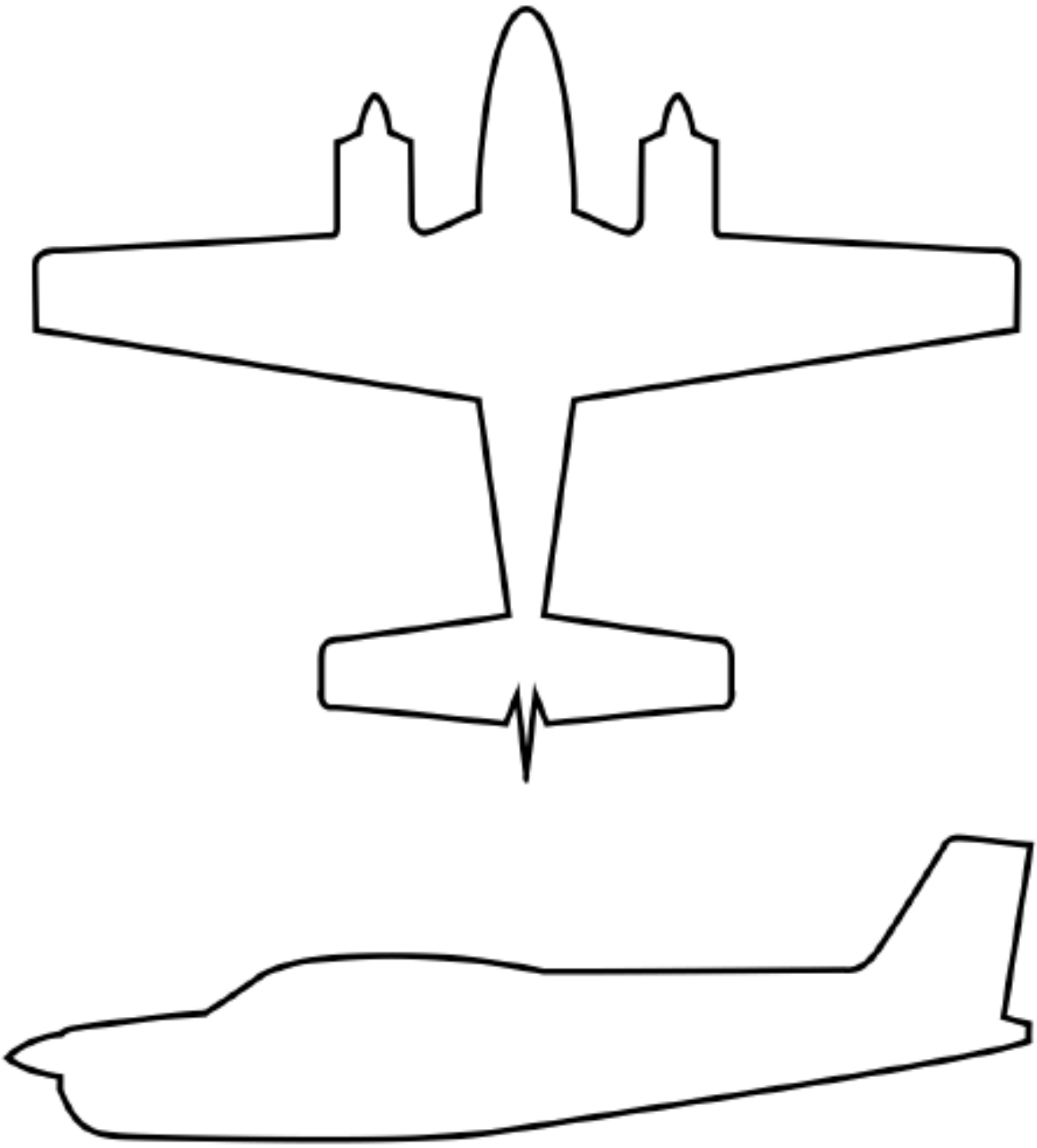

Figure A-2 – Equipment Location and Wire Routing – Twin Engine Airplane