GARMIN®

AXIS™ Flight Displays

Installation Manual for Experimental Aircraft

190-03123-20 October 2026 Revision 4

© 2026
Garmin International, Inc., or its subsidiaries
All Rights Reserved

Except as expressly provided herein, no part of this manual may be reproduced, copied, transmitted, disseminated, downloaded or stored in any storage medium, for any purpose without the express prior written consent of Garmin. Garmin hereby grants permission to download a single copy of this manual and of any revision to this manual onto a hard drive or other electronic storage medium to be viewed and to print one copy of this manual or of any revision hereto, provided that such electronic or printed copy of this manual or revision must contain the complete text of this copyright notice and provided further that any unauthorized commercial distribution of this manual or any revision hereto is strictly prohibited.

Bendix/King® and Honeywell® are registered trademarks of Honeywell International, Inc.

© 2026 SiriusXM Radio Inc. Sirius, XM and all related marks and logos are trademarks of SiriusXM Radio Inc. All other marks and logos are property of their respective owners. All rights reserved.

Garmin®, FliteCharts®, and SafeTaxi® are registered trademarks of Garmin International or its subsidiaries.

AXIS™, GDU™, Connext™, GCO™, GEA™, GHA™, GNS™, GMA™, GNX™, GTR™, GTS™, GTX™, WireAware™, and GTN™, are trademarks of Garmin International or its subsidiaries. These trademarks may not be used without the express permission of Garmin.

The Bluetooth® word mark and logos are registered trademarks owned by Bluetooth SIG, Inc. and any use of such marks by Garmin is under license. Other trademarks and trade names are those of their respective owners.

ChartView™ is a trademark of Jeppesen, Inc.

© 2026 SD® is a registered trademark of SD-3C, LLC. All rights reserved.

All other product or company names mentioned in this manual are trade names, trademarks, or registered trademarks of their respective owners.

For aviation product support, visit Garmin’s Aviation Support Center.

For information regarding the Aviation Limited Warranty, refer to Gamin's website.

INFORMATION SUBJECT TO EXPORT CONTROL LAWS

This document may contain information that is subject to the Export Administration Regulations (EAR) issued by the United States Department of Commerce (15 CFR, Chapter VII, Subchapter C) and may not be exported, released, or disclosed to foreign nationals inside or outside of the United States without first obtaining an export license.

The information in this document is subject to change without notice. For updates and supplemental information regarding the operation of Garmin products, visit the Aviation Support Center.

SOFTWARE LICENSE NOTIFICATION

AES Encryption

The product may include AES file encryption software, © 2002 DR. Brian Gladman, subject to the following license:

The free distribution and use of this software in both source and binary form is allowed (with or without changes) provided:

- Distributions of this source code include the above copyright notice, this list of conditions, and the following disclaimer.
- Distribution in binary form include the above copyright notice, this list of conditions, and the following disclaimer in the documentation and/or other associated materials.
- The copyright holder's name is not used to endorse products built using this software without specific written permission.

Alternatively, provided this notice is retained in full, this product may be distributed under the terms of the GNU General Public License (GPL) in which case the provisions of the GPL apply instead of those given above.

Disclaimer

The AES file encryption software is provided "as is" with no explicit or implied warranties in respect of its properties, including, but not limited to, correctness and/or fitness for purpose.

SOFTWARE LICENSE AGREEMENT FOR GARMIN AVIATION PRODUCTS

BY USING THE DEVICE, COMPONENT OR SYSTEM MANUFACTURED OR SOLD BY GARMIN ("THE GARMIN PRODUCT"), YOU AGREE TO BE BOUND BY THE TERMS AND CONDITIONS OF THE FOLLOWING SOFTWARE LICENSE AGREEMENT.

PLEASE READ THIS AGREEMENT CAREFULLY. Garmin Ltd. and its subsidiaries ("Garmin") grants you a limited license to use the software embedded in the Garmin Product (the "Software") in binary executable form in the normal operation of the Garmin Product. Title, ownership rights, and intellectual property rights in and to the Software remain with Garmin and/or its third-party providers. You acknowledge the Software is the property of Garmin and/or its third party providers and is protected under the United States of America copyright laws and international copyright treaties.

You further acknowledge the structure, organization, and code of the Software are valuable trade secrets of Garmin and/or its third-party providers and the Software in source code form remains a valuable trade secret of Garmin and/or its third-party providers. You agree not to reproduce, decompile, disassemble, modify, reverse assemble, reverse engineer, or reduce to human readable form the Software or any part thereof or create any derivative works based on the Software. You agree not to export or re-export the Software to any country in violation of the export control laws of the United States of America.

LICENSE REQUIREMENTS

CAUTION

The VHF transmitter in this equipment is guaranteed to meet FCC acceptance over the operating temperature range. Modifications not expressly approved by Garmin could invalidate the license and make it unlawful to operate the equipment.

The Telecommunications Act of 1996, effective February 8, 1996, provides the FCC discretion to eliminate radio station license requirements for aircraft and ships. Unit installations must obey current transmitter licensing requirements. In the US, visit the FCC website https://www.fcc.gov/wireless/bureau-divisions/mobility-division/aviation-radio-services to find out the specific details on whether a particular installation is exempt from licensing.

If an aircraft license is necessary, apply for a license using FCC Form 605, *Quick-Form Application for Authorization in the Ship, Aircraft, Amateur, Restricted and Commercial Operator, and General Mobile Radio Services*. The FCC also has a fax-on-demand service to supply forms by fax. If outside of the US, contact the responsible telecommunication authority. The owner of the GDU 116( ) accepts all responsibility for obtaining the proper licensing before using the transceiver. The maximum transmitting power, modulation identification, and frequency band information may be required for licensing and are detailed in section 3.4.2.

RECORD OF REVISIONS

Rev	Revision Date	Change Description
1	07/06/2026	Initial release of document.
2	07/12/2026	Added installation guidance for GTX 45R/345(D)R to manual.
3	07/31/2026	Added antenna requirements and made various edits.
4	10/05/2026	Added software v2.20/2.21 functionality.

CURRENT REVISION DESCRIPTION

Changes listed in the following table are identified by change bars in the manual. Deletions are not included.

Section	Change Description
Page vi	Added caution about electrostatic sensitive components.
3.2.1	Added “GTR 205R(x) to table 3-1 “Garmin LRU HSDB Port Summary.”
5.2.1	Changed the setting “Non-Certified” to “EAB” and added information about selecting a different setting. Updated Figure 5-2 “System Type Selection.”
5.4.1.1	Changed “Non-Certified” to “EAB.” Added “Number of Engines” section to “General” section.
5.4.5	Added HSDB information to “FPL Power Up Source” section.
5.4.7.4	Added “Traffic App” and “Weather App” section to “Apps Bar” section.
5.4.8.11	Added a note stating terrain alerting cannot be disabled in systems with a TAWS-B enablement.
5.4.9	Added information about the slip/skid indicator unavailability when a G5 or GI 275 is in the system in “Slip/Skid” section.
5.4.9	Added “Trim/Flap Titles” section.
5.4.13	Added “Default to VFR Code on Power Up” section.
5.5.1	Updated “Gauge Priority” section with latest information.
5.5.2.2.8.1	Added information about the “Calibrate” option is available if Installer Mode is enabled to “Voltage Input Pins” section.
5.5.2.2.10.1	Added note that reads “When a fuel calibration file is exported from the G3X Touch, it is saved in the Garmin/cal folder on the SD card. Copy the entire Garmin/cal folder, including its contents, to the root directory of a USB-C drive. Do not place it inside another folder.”
5.5.2.2.25	Added “Custom Frequency Measurements” section.
5.5.2.2.26	Added “Rotax FADEC Throttle Position” section.
5.5.3	Changed “Master Annunciator Reset” setting to “All Annunc Ack” in table 5-12 “PFD Discrete Inputs.”
5.5.3	Added “Rotax Lane A Warning Lamp (Engine 1/2)” setting and “Rotax Lane B Warning Lamp (Engine 1/2)” setting to table 5-13 “Aircraft Discrete Inputs.”
5.5.4.1	Added “Discrete Outputs” section.
5.5.4.2	Added “Annunciator Lamps” section.
5.5.8	Added “General” section.
5.7.4.2	Added step 10 to “Configure Lighting Bus” section.
5.9.8.1	Changed section heading to “Forget.”
5.10	Added “Generic Data Outputs” section.
A.1.5.4	Added descriptions of two states of outputs in “Discrete Outputs” section.

Section	Change Description
A.11.2	Updated name of pin 22 from “OUT” to “IN” in table A-106 “GAD 29/29B/29C/29D J292 Connector.”
A.16.3	Added “Power Pins” section.
A.16.4	Added “Configuration Module Pins” section.
A.16.5	Added “Analog Inputs” section.
A.16.6	Added “Digital Inputs” section
A.16.7	Added “Analog/CCS Inputs” section
A.16.8	Added “Analog/CCS/Digital Inputs” section
A.16.9	Added “Shunt Inputs” section
A.16.10	Added “Discrete Outputs” section
A.16.11	Added “Configurable Discrete Inputs” section
A.16.12	Added “RS-485 Channels” section
A.16.13	Added “Transducer Power Out Pins” section
A.16.14	Added “GEA System ID” section
B.1	Added “CAN LO,” “CAN HI,” and note 7 to figure B-1.1 “AXIS Flight Display Power, Config Module, and HSDB Interconnect.”
B.2	Reworded note 4 of figure B-2.6 “GTR 205(R)(x)” for clarity.
B.3	Added GTX 45R to figure B-3.2 “GTX 345/345R/345D/345DR Transponder Interconnect.”
B.10	Updated RS-232 6 pins 4 and 5 in figure B-10.1 “GEA 24(B) Lycoming/Continental Interface (4- and 6-Cylinder).”
C.10	Added “Aircraft Batteries” section.
C.11.10	Added table C-39 “ROTAX FADEC CAS Alert Triggers.”
C.12	Added note 1 to table C-40 “Compatible Engine/Airframe Input Sensors.”
E.1	Rewrote “Overview” section for clarity.
E.3.1	Added “On ground state” to “Data Sources” section.
E.5	Added information about logic signals to end of “Logic Signals” section.
F.15	Added “Export Configuration” section.

MANUAL LAYOUT

The aim of this installation manual is to provide clear and concise guidance in a layout designed to follow the logical order of a typical system installation.

DEFINITIONS

WARNING
A warning means injury or death is possible.

CAUTION
A caution means that damage to the equipment is possible.

NOTE
A note provides additional information.

WARNING
This product, its packaging, and its components contain chemicals known to the State of California to cause cancer, birth defects, or reproductive harm. This notice is being provided in accordance with California's Proposition 65. For questions or additional information, refer to www.garmin.com/prop65.

WARNING
Perchlorate Material – special handling may apply. Refer to https://dtsc.ca.gov/perchlorate/.

WARNING
Failure to properly configure the EIS gauges per the POH/AFM and other approved data could result in serious injury, damage to equipment, or death.

WARNING
This product contains a lithium battery that must be recycled or disposed of properly. Battery replacement and removal must be performed by Garmin-authorized professional services.

CAUTION
To avoid damage to the GDU, take precautions to prevent electrostatic discharge (ESD) when handling the unit, connectors, and associated wiring. ESD damage can be prevented by touching an object of the same electrical potential as the unit before handling the unit itself.

CAUTION
This unit contains electrostatic sensitive components. While the risk of ESD exposure is inherently reduced for electronic assemblies that remain fully enclosed, following ESD procedures is recommended when handling the unit outside of its protective packaging, and when not in a completed installation. Unless otherwise instructed, do not attempt to open or disassemble the LRU.

CAUTION

The GDU has a special anti-reflective coated display that is sensitive to skin oils, waxes, and abrasive cleaners. CLEANERS CONTAINING AMMONIA WILL HARM THE ANTI-REFLECTIVE COATING. Clean the display with a clean, lint-free cloth and a cleaner that is safe for anti-reflective coatings.

NOTE

System configuration settings must be verified for the specific build and installation following any software load or update.

ACRONYMS

A	
AC	Advisory Circular
ADAHRS	Air Data/Attitude and Heading Reference System
ADC	Air Data Computer
ADF	Automatic Direction Finder
ADI	Attitude and Direction Indicator
ADS-B	Automatic Dependent Surveillance - Broadcast
ADS-R	Automatic Dependent Surveillance - Rebroadcast
AFCS	Automatic Flight Control System
AFM	Aircraft Flight Manual
AGL	Above Ground Level
AHRS	Attitude Heading Reference System
ALT	Altitude
ALTC	Altitude Selected Capture
ALTV	Altitude VNAV Target Capture
AOA	Angle of Attack
AOPA	Aircraft Owners and Pilots Association
AP	Autopilot
APT	Automatic Pitch Trim
ASA	Aircraft Surveillance Applications
B	
BNC	Bayonet Neill–Concelman
C	
CDI	Course Deviation Indicator
CDT	Compressor Discharge Temperature
CDTI	Cockpit Display of Traffic Information
CDU	Control and Display Unit
CDUI	Control/Display User Interface
CFR	Code of Federal Regulation
CHT	Cylinder Head Temperature
CWS	Control Wheel Steering
D	
DC	Direct Current
E	
EAR	Export Administration Regulations
EFIS	Electronic Flight Instrument System
EGT	Exhaust Gas Temperature

E	
EIS	Engine Indication System
ESP	Electronic Stability and Protection
ETSO	European Technical Standard Order
F	
FAA	Federal Aviation Administration
FAR	Federal Aviation Regulation
FD	Flight Director
FIS-B	Flight Information Services-Broadcast
FLTA	Forward Looking Terrain Avoidance
FOV	Field of View
FPM	Feet Per Minute
G	
GA	Go Around
GAD	Garmin Adapter
GBB	Garmin Backup Battery
GCU	Garmin Control Unit
GDC	Garmin Air Data Computer
GDL	Garmin Data Link
GDU	Garmin Display Unit
GEA	Garmin Engine and Airframe
GFDS	Garmin Flight Data Services
GLS	GNSS Landing System
GMA	Garmin Marker/Audio
GMU	Garmin Magnetometer Unit
GNS	Garmin Navigation System
GNSS	Global Navigation Satellite System
GP	General Purpose
GP	Glide Path
GPS	Global Positioning System
GPSS	Global Positioning System Steering
GPWS	Ground Proximity Warning System
GRS	Garmin Reference System
GS	Glide Slope
GSR	Garmin Satellite Receiver
GSU	Garmin Sensing Unit
GTN	Garmin Touchscreen Navigator
GTOW	Gross Takeoff Weight

G	
GTP	Garmin Temperature Probe
GTS	Garmin Traffic System
GTX	Garmin Transponder
GWX	Garmin Weather Radar
H	
HSDB	High Speed Data Bus
HSI	Horizontal Situation Indicator
I	
IAF	Initial Approach Fix
IAS	Indicated Airspeed
IAT	Induction Air Temperature
ICAO	International Civil Aviation Organization
IFR	Instrument Flight Rules
IGRF	International Geomagnetic Reference Field
ILS	Instrument Landing System
IMC	Instrument Meteorological Conditions
K	
KIAS	Knots Indicated Airspeed
KPH	Kilometers Per Hour
Kts	Knots
L	
LCD	Liquid Crystal Display
LOC	Localizer
LRU	Line Replaceable Unit
M	
MAP	Missed Approach Point
MFD	Multi-Function Display
MOPS	Minimum Operational Performance Standard
MPH	Miles Per Hour
MPS	Meters Per Second
MSL	Mean Sea Level
N	
NDB	Non-Directional Beacon
NEXRAD	Next-Generation Radar
NVIS	Night Vision Imaging System
O	
OAT	Outside Air Temperature

O	
OEM	Original Equipment Manufacturer
OSP	Overspeed Protection
P	
PDA	Premature Descent Alert
PED	Portable Electronic Device
PFD	Primary Flight Display
PFW	Primary Flight Window
PIT	Pitch Attitude Hold
P/N	Part Number
PVT	Position, Velocity, and Time
R	
RAM	Random Access Memory
RP	Reduced Protection
RPM	Revolutions Per Minute
RVSM	Reduced Vertical Separation Minimum
S	
SAE	Society of Automotive Engineers
SBAS	Satellite-Based Augmentation System
SD	Secure Digital (Card)
SFD	Standby Flight Display
SURF	Surface Surveillance Application
SVT	Synthetic Vision Technology
SVS	Synthetic Vision System
T	
TA	Traffic Advisory
TAS	Traffic Advisory System
TAWS	Terrain Awareness and Warning System
TC	Type Certificate
TCAD	Traffic Collision Avoidance Device
TCAS	Traffic Alert and Collision Avoidance System
TFR	Temporary Flight Restriction
TFT	Thin Film Transistor
TIS-B	Traffic Information Service - Broadcast
TIT	Turbine Inlet Temperature
TNC	Threaded Neill-Concelman
TSO	Technical Standard Order

U	
UTC	Universal Time Coordinated
V	
VDI	Vertical Deviation Indicator
V	
VFR	Visual Flight Rules
VLOC	VOR/Localizer
VOR	Very High Frequency Omni-directional Range
VS	Vertical Speed
W	
WAAS	Wide Area Augmentation System
WATCH	Weather Attenuated Color Highlight

Table Of Contents

1 AXIS FLIGHT DISPLAYS SYSTEM DESCRIPTION 1-1
1.1 Introduction 1-2
1.2 System Overview 1-2
1.3 System Architecture Examples 1-29
2 LIMITATIONS 2-1
2.1 Limitations 2-2
3 PREPARATION 3-1
3.1 Selection of System Components 3-2
3.2 Installation Requirements 3-10
3.3 Materials and Parts 3-17
3.4 Electrical Considerations 3-41
4 INSTALLATION 4-1
4.1 LRU Installation and Wiring Harness Fabrication 4-2
4.2 Pitot-Static Routing 4-6
4.3 Backshell Assembly 4-8
4.4 AXIS Display and Remote LRU Installations 4-25
5 SYSTEM CONFIGURATION 5-1
5.1 System Configuration Preparation 5-3
5.2 Configuration Mode 5-6
5.3 Device Application 5-11
5.4 Settings 5-21
5.5 A&P (Airframe and Powerplant) 5-57
5.6 Autopilot Application 5-95
5.7 CAL 5-106
5.8 Diagnostics 5-112
5.9 Miscellaneous 5-114
5.10 Generic Data Outputs 5-128
6 SYSTEM CHECKOUT 6-1
6.1 Configuration Mode Ground Check 6-2
6.2 EIS Checks 6-3
6.3 GSU Pitch/Roll Offset Calibration 6-5
6.4 GMC Pitch/Roll Offset Calibration 6-7
6.5 Engine Vibration Test 6-8
6.6 Magnetometer Interference Test 6-9
6.7 Magnetometer Calibration 6-12
6.8 NAV 6-14
6.9 GPS 6-16
6.10 Audio Panel/COM 6-18
6.11 Transponder 6-21
6.12 EMI Check 6-22
6.13 AOA Calibration 6-25
6.14 Autopilot 6-34
APPENDIX A CONNECTORS AND PIN FUNCTIONS A-1
A.1 AXIS Flight Display A-4
A.2 GSU 25 (AHRS/Air Data Sensor Unit) A-29
A.3 GTP 59 (Temperature Probe) A-34
A.4 GMU 11 (Magnetometer) A-35
A.5 GMU 44(B) A-37

A.6 GMU 22/44 ..... A-38
A.7 GEA 24 (EIS Interface) A-40
A.8 GMC 507 (AFCS Mode Controller) A-57
A.9 GSA 28 (Autopilot Servo) A-60
A.10 GAD 27 (Flaps/Lights/Trim Controller) A-63
A.11 GAD 29/29B/29C/29D (ARINC 429 Adapter) A-72
A.12 GAP 26 ..... A-76
A.13 GHA 15 Height Advisor A-76
A.14 GI 260 (AOA Indicator) A-78
A.15 GSU 75 ..... A-79
A.16 GEA 110 ..... A-82
A.17 GTR 20 (VHF Communications Radio) A-91
A.18 GCO 14 ..... A-97
A.19 GDL 52R A-98
A.20 GTR 205R(x) A-99
APPENDIX B INTERCONNECT DIAGRAMS B-1
B.1 AXIS Flight Display Interconnects B-4
B.2 Navigation and Communication Interconnects B-13
B.3 Transponder Interconnects B-24
B.4 Weather and Traffic Interconnects B-28
B.5 Autopilot Interconnects B-29
B.6 GAD 27 Interconnects B-32
B.7 Miscellaneous Interconnects B-39
B.8 Audio Interconnects B-45
B.9 Sensor Wiring Examples B-59
B.10 Lycoming/Continental Sensor Wiring Examples B-84
B.11 PT6A Sensor Wiring Examples B-88
B.12 Rotax Sensor Wiring Examples B-90
APPENDIX C EQUIPMENT COMPATIBILITY AND CONFIGURATION C-1
C.1 Standby Flight Display C-3
C.2 Small Format Navigators C-5
C.3 GTN Xi Series Navigators C-8
C.4 GTN Series Navigators C-9
C.5 GNS Series Navigators C-10
C.6 GNS 480 Navigator C-11
C.7 COM C-12
C.8 NAV/COM C-15
C.9 Transponders C-18
C.10 Aircraft Batteries C-21
C.11 Engine Sensor Applications C-22
C.12 EIS Sensors C-31
C.13 Antennas C-36
APPENDIX D FLIGHT TEST PLAN FOR AUTOPILOT TUNING D-1
D.1 Autopilot Flight Test Plan Introduction D-1
D.2 Gain Descriptions D-2
D.3 Flight Test Outline D-3
APPENDIX E LOGIC SIGNAL EDITOR E-1
E.1 Overview E-2
E.2 The Logic Tree E-2
E.3 Triggers E-3

E.4 Operators E-5
E.5 Logic Signals E-6
E.6 Worked Example: Configuring Conditional RPM Limits for Engine Warm-Up E-7
APPENDIX F G3X TOUCH UPGRADE F-1
F.1 Introduction F-2
F.2 Planning F-6
F.3 Preparing G3X Touch System to Upgrade to AXIS Flight Display F-17
F.4 Update Software on External LRUs F-19
F.5 AXIS Flight Display Fitment F-20
F.6 Make Wiring Harness Modifications F-20
F.7 Wire Harness Mounting, Continuity and Power Checks F-21
F.8 Configure AXIS Flight Display F-21
F.9 Import Fuel Calibration F-22
F.10 Calibrate ADAHRS and Magnetometer F-22
F.11 Update Databases F-22
F.12 Perform Autopilot On Ground Test F-22
F.13 Initial Autopilot Engagement In-Air F-22
F.14 Perform In-Flight AOA Calibration F-22
F.15 Export Configuration F-23
APPENDIX G LRU PERFORMANCE SPECIFICATIONS/LICENSING/COMPLIANCE G-1
G.1 GAD 29 ..... G-2
G.2 GAP 26 ..... G-2
G.3 GDU 116(B)(C)(NC) G-2
G.4 GEA 24 Engine Interface Module G-9
G.5 GHA 15 ..... G-9
G.6 GMA 245/245R Audio Panel G-11
G.7 GMC 305/307/507 ..... G-12
G.8 GMU 11 ..... G-12
G.9 GMU 22 ..... G-12
G.10 GSA 28 ..... G-12
G.11 GSU 25 ..... G-13
G.12 GSU 73 ..... G-14
G.13 GTP 59 ..... G-15
G.14 GTR 20/200 ..... G-16
APPENDIX H RS-232 TEXT OUTPUT FORMAT H-1
H.1 Electrical Interface H-1
H.2 Message Output Selection H-1
H.3 General Message Output Format H-1
H.4 Attitude/Air Data Message Format H-2
H.5 Engine Data Message Format H-4
H.6 GPS Data Message Formats H-6
H.7 EIS Complete Data Message Format H-8
H.8 CNI Message Format H-11
APPENDIX J MAINTENANCE AND TROUBLESHOOTING J-1
J.1 Inspections/Maintenance J-2
J.2 Return To Service Information J-3
J.3 Troubleshooting J-8
J.4 Routine Software Update Procedure J-21
J.5 GPS 20A Lights J-29

List of Figures

Figure 1-1 AXIS Flight Display Block Diagram....1-5
Figure 1-2 GDU 116( ) and GSU 25 Block Diagram....1-6
Figure 1-3 PFD/MFD and GSU 75 Block Diagram....1-7
Figure 1-4 GDU 116( ) and GEA 24 Block Diagram....1-9
Figure 1-5 GDU 116( ) and GEA 110 Block Diagram....1-10
Figure 1-6 GDU 116( ) and HSDB Navigator Block Diagram....1-11
Figure 1-7 GDU 116( ) and GNC 215 NAV/COM Block Diagram....1-12
Figure 1-8 GDU 116( ) and GTN 6XX/7XX Block Diagram....1-13
Figure 1-9 GDU 116( ) and GNS Series Navigators Block Diagram....1-14
Figure 1-10 GDU 116( ) and NAV/COM Block Diagram....1-15
Figure 1-11 GDU 116( ) and GNC 215 Block Diagram....1-15
Figure 1-12 AXIS and GNX 375 Block Diagram....1-21
Figure 1-13 AXIS and GTX 345(R)(D) Block Diagram....1-21
Figure 1-14 AXIS, GSU 25, and GTX 345(R)(D) Block Diagram....1-21
Figure 1-15 GSU 25 and Transponder Block Diagram....1-22
Figure 1-16 GTR Intercom Only Installation....1-24
Figure 1-17 AXIS Flight Display as the Audio Panel Device....1-24
Figure 1-18 External Audio Panel Device....1-25
Figure 1-19 CAN Supported LRUs....1-29
Figure 1-20 Three-Display System with GI 275....1-30
Figure 1-21 Two-Display System with Small Format Navigator, with GI 275....1-30
Figure 1-22 Two-Display System with GTN Xi and GI 275....1-31
Figure 1-23 Two-Display System with GTN 6XX/7XX....1-31
Figure 1-24 Two-Display System with GTN 6XX/7XX (Alternate)....1-32
Figure 1-25 Two-Display System with GTS 8XX....1-32
Figure 3-1 Primary Flight Window....3-2
Figure 3-2 Multi-function Window....3-2
Figure 3-3 Full Screen PFD....3-3
Figure 3-4 Split Screen PFD....3-3
Figure 3-5 Full Screen MFD....3-4
Figure 3-6 Split Screen MFD....3-4
Figure 3-7 Common Display Configuration Examples....3-5
Figure 3-8 MFD Engine Page....3-7
Figure 3-9 CAN Bus Backbone....3-11
Figure 3-10 Daisy-chained LRUs on Backbone....3-11
Figure 3-11 Node Connections....3-12
Figure 3-12 Correct CAN Wiring Example....3-12
Figure 3-13 Incorrect CAN Wiring Example....3-12
Figure 3-14 Correct CAN Bus Termination Example....3-13
Figure 3-15 Incorrect CAN Bus Termination Examples....3-13
Figure 3-16 CAN Bus Termination (P/N 011-02887-00)....3-14
Figure 3-17 CAN Bus Shield Grounding....3-15
Figure 3-18 Flush Cut Diagonal Side Cutter....3-27
Figure 3-19 Tubing Cutters....3-27
Figure 3-20 Cable Cutting Pliers....3-28
Figure 3-21 Miscellaneous Cutting Tools....3-28
Figure 3-22 Wire Strippers....3-29
Figure 3-23 Coaxial Cable Strippers....3-30

Figure 3-24 Crimping Tool (MIL SPEC M22520/2-01) ... 3-31
Figure 3-25 Positioners ... 3-31
Figure 3-26 AMP Pro Crimper II and Die Set ... 3-33
Figure 3-27 TE Connectivity Instruction Sheet (408-9252) ... 3-33
Figure 3-28 AMP Die Set (P/N 58436-1) ... 3-34
Figure 3-29 Ferrule Positioning ... 3-35
Figure 3-30 Crimper (MIL SPEC M22520/37-01) ... 3-36
Figure 3-31 Crimper Locating Fixture (M22520/37-01) ... 3-36
Figure 3-32 Insertion/Extraction Tools ... 3-38
Figure 3-33 Tweezer-Type Extractor Tool ... 3-38
Figure 3-34 Soldering Equipment Examples ... 3-39
Figure 3-35 Cordless Heat Gun with Tip Attachments ... 3-39
Figure 4-1 Insulation/Contact Clearance ... 4-2
Figure 4-2 Shield Termination Methods ... 4-5
Figure 4-3 Pitot-Static Connections for Single ADAHRS Installation ... 4-7
Figure 4-4 Pitot-Static Connections for Dual ADAHRS Installation ... 4-7
Figure 4-5 Jackscrew Backshell and Shield Block Assembly ... 4-9
Figure 4-6 Shield Block Termination on Jackscrew Backshell Assembly ... 4-10
Figure 4-7 Backshell with Hardware and Shield Block Assembly ... 4-12
Figure 4-8 Shield Termination on Backshell with Hardware Assembly ... 4-13
Figure 4-9 Configuration Module Assembly without GCO 14 ... 4-15
Figure 4-10 GMU 44(B) Connector Harness ... 4-17
Figure 4-11 GMU 44(B) Shield Termination ... 4-18
Figure 4-12 GMU 44(B) Connector Insulation/Socket Clearance ... 4-19
Figure 4-13 GHA 15 Right Angle Saddle Clamp Strain Relief ... 4-22
Figure 4-14 D-Sub Spliced Signal Wire Illustration ... 4-24
Figure 4-15 GDU 116B CG and Dimensions ... 4-31
Figure 4-16 GDU 116B with GSU 25D CG and Dimensions ... 4-32
Figure 4-17 GDU 116C and GDU 116NC CG and Dimensions ... 4-33
Figure 4-18 GDU 116C and GDU 116NC with GSU 25D CG and Dimensions ... 4-34
Figure 4-19 AXIS Flight Display Cutout Dimensions ... 4-35
Figure 4-20 AXIS Flight Display Installation ... 4-36
Figure 4-21 GDU 116( ) with P/N 115-01725-01 Nut Plate ... 4-37
Figure 4-22 HDMI Adapter (P/N 011-05801-00) ... 4-38
Figure 4-23 GSU 25 Mounting to AXIS Flight Display ... 4-42
Figure 4-24 GSU 25 Air Hose Fitting Locations ... 4-44
Figure 4-25 Pitot-Static Connections for GSU 25D (No GAP 26) ... 4-44
Figure 4-26 GSU 25 Mounting Orientations ... 4-46
Figure 4-27 GSU 25 Unit View ... 4-47
Figure 4-28 GSU 25 Installation Drawing ... 4-48
Figure 4-29 GSU 25 Shelf Mounting ... 4-49
Figure 4-30 GTP 59 ... 4-50
Figure 4-31 GTP 59 OAT Dimensions ... 4-53
Figure 4-32 GTP 59 OAT Probe Installation Drawing ... 4-54
Figure 4-33 GMU 11 Unit View ... 4-55
Figure 4-34 GMU 11 Outline Drawing ... 4-59
Figure 4-35 GMU 11 Installation Drawing ... 4-60
Figure 4-36 GMU 11 Orientation Drawing ... 4-61
Figure 4-37 GMU 11 Pitch and Roll Requirements ... 4-62
Figure 4-38 GMU 11 Heading Alignment Requirement ... 4-62

Figure 4-39 GMU 22 Unit View 4-63
Figure 4-40 GMU 44(B) Unit View 4-63
Figure 4-41 GMU 22 Mounting Rack (P/N 115-00481-00) 4-68
Figure 4-42 GMU 22/44 Mounting Rack (115-00481-10) 4-69
Figure 4-43 GMU 22 Top Mounted Installation 4-70
Figure 4-44 GMU 22 Bottom Mounted Installation 4-71
Figure 4-45 GMU 22 Wiring Details 4-72
Figure 4-46 GMU 44(B) Dimensions 4-73
Figure 4-47 GMU 44(B) Installation (Universal Mount Example) 4-74
Figure 4-48 GMU 44(B) Installation (Fabricated Bracket Example) 4-75
Figure 4-49 GEA 24 Unit View 4-76
Figure 4-50 GEA 24 Outline Drawing 4-80
Figure 4-51 GEA 24 Assembly Drawing without CAN Bus Terminator 4-81
Figure 4-52 GEA 24 Assembly Drawing with CAN Bus Terminator 4-82
Figure 4-53 GMC 507 Unit View (-00 version) 4-83
Figure 4-54 Pawl Latch 4-85
Figure 4-55 GMC 507 Outline Drawing without Installation Rack 4-86
Figure 4-56 GMC 507 Installation Drawing without Installation Rack 4-87
Figure 4-57 GMC 507 Cutout Drawing without Installation Rack 4-88
Figure 4-58 GMC 507 Panel Cutout Template without Installation Rack 4-89
Figure 4-59 GMC 507 Outline Drawing with Installation Rack 4-90
Figure 4-60 GMC 507 Installation Drawing with Installation Rack 4-91
Figure 4-61 GMC 507 Panel Cutout Template for Installation with Installation Rack 4-92
Figure 4-62 GSA 28 Unit View 4-93
Figure 4-63 General Dimensions For Servo Push Rod And Rod End Bearings 4-97
Figure 4-64 Bridle Cable 4-98
Figure 4-65 Cable in Capstan 4-99
Figure 4-66 Non-Garmin GSA 28 Bracket 4-102
Figure 4-67 Crank Arm Assembly 4-103
Figure 4-68 Wiring Diagram For GSA 28 Removal Adapter 4-105
Figure 4-69 GSA 28 Outline/Installation Drawing (P/N 011-02927-20) 4-107
Figure 4-70 GSA 28 Accessory Installation Drawing 4-108
Figure 4-71 GSA 28 Crank Arm Attachments Drawing 4-109
Figure 4-72 GSA 28 with Capstan Kit and Cable Instructions (P/N 011-02952-02) 4-110
Figure 4-73 GSA 28 Recommended Bracket Cutout Dimensions 4-111
Figure 4-74 GSA 28 Recommended Mounting Hardware 4-112
Figure 4-75 GSA 28 Generic, Push-Pull Mounting Kit (No Bracket) (P/N 011-02952-00) 4-113
Figure 4-76 GSA 28 Generic, Push-Pull Mounting Kit w/Bracket (P/N 011-02952-01) 4-114
Figure 4-77 GSA 28 RV-6 Roll Mounting Kit P/N (P/N 011-02952-10) 4-115
Figure 4-78 GSA 28 RV-4/8 Pitch Mounting Kit (P/N 011-02952-11) 4-118
Figure 4-79 GSA 28 RV-7/8/10 Roll Mounting Kit (P/N 011-02952-12) 4-122
Figure 4-80 GSA 28 RV-9 Roll Mounting Kit P/N (011-02952-13) 4-124
Figure 4-81 GSA 28 RV-6/7/9 Mounting Kit (P/N 011-02952-14) 4-126
Figure 4-82 GSA 28 RV-10 Pitch Mounting Kit (P/N 011-02952-15) 4-128
Figure 4-83 GSA 28 RV-10 Yaw Mounting Kit (P/N 011-02952-16) 4-130
Figure 4-84 GAD 27 Unit View 4-133
Figure 4-85 GAD 27 Outline Drawing 4-136
Figure 4-86 GAD 27 Installation Drawing 4-137
Figure 4-87 GAD 29 Unit View 4-138
Figure 4-88 GAD 29 Outline Drawing 4-141

Figure 4-89 GAD 29 Installation Drawing without CAN Bus Terminator 4-142
Figure 4-90 GAD 29 Installation Drawing with CAN Bus Terminator 4-143
Figure 4-91 GAD 29 Installation 4-144
Figure 4-92 GAP 26 Unit View (-10 Version Shown) 4-145
Figure 4-93 GAP 26 Mounting Location Guidance 4-148
Figure 4-94 GAP 26 Probe and Mount (Side View) 4-150
Figure 4-95 GAP 26 Shown with Inspection Panel and Doubler Plate 4-150
Figure 4-96 GAP 26 Installation Components 4-151
Figure 4-97 GAP 26 Installation 4-152
Figure 4-98 GAP 26 Mount Tube Bracket Dimensions 4-154
Figure 4-99 GAP 26 Mount Tube Dimensions 4-154
Figure 4-100 GAP 26 Alignment (Side View) 4-155
Figure 4-101 GAP 26 Alignment (Bottom View) 4-155
Figure 4-102 GAP 26 Pneumatic Lines 4-157
Figure 4-103 GAP 26 Heater Control Box (Used with -20 Unit Only) 4-158
Figure 4-104 P/N 011-02964-20 Probe Wiring 4-159
Figure 4-105 P/N 011-02964-20 Probe to Control Box Connectors 4-159
Figure 4-106 GAP 26 Banded Wire 4-160
Figure 4-107 GAP 26 14V Installation Configuration (P/N 010-01074-10) 4-160
Figure 4-108 GAP 26 28V Installation Configuration (P/N 010-01074-10) 4-161
Figure 4-109 GAP 26 Outline Drawing 4-162
Figure 4-110 GAP 26 Probe Dimensions 4-163
Figure 4-111 GHA 15 4-164
Figure 4-112 GHA 15 Outline Drawing 4-169
Figure 4-113 GI 260 Unit View 4-170
Figure 4-114 GI 260 Outline/Assembly Drawing 4-172
Figure 4-115 GEA 110 Dimensions 4-174
Figure 4-116 GEA 110 Installation (Mounted Directly to Airframe Example) 4-175
Figure 4-117 GEA 110 Installation (Mounted on a Tray Example) 4-176
Figure 4-118 GSU 75 Dimensions 4-178
Figure 4-119 GSU 75 Installation (Sheet Metal Shelf Example) 4-179
Figure 4-120 GSU 75 Installation (Sandwich Shelf Example) 4-179
Figure 4-121 Tie Wrap Method 4-180
Figure 4-122 D-sub Mounting Options 4-181
Figure 4-123 GCO 14 with Cable Harness 4-182
Figure 4-124 Retention Clip Insertion 4-183
Figure 4-125 GCO 14 Dimensions 4-184
Figure 4-126 GPS/SBAS and COM Antenna Mounting Considerations 4-187
Figure 4-127 VFR GPS Antenna Dimensions 4-189
Figure 4-128 VFR GPS Antenna Installation (Screw Installation Example) 4-190
Figure 4-129 VFR GPS Antenna Installation (Hook and Loop Installation Example) 4-191
Figure 4-130 GPS/WAAS Antenna Minimum Ground Plane Radius 4-193
Figure 4-131 Doubler Design, Teardrop Footprint Antenna Skin Thickness 0.032" 4-196
Figure 4-132 Doubler Design, Teardrop Footprint Antenna Skin Thickness 0.049" 4-196
Figure 4-133 Doubler Design, Teardrop Footprint Antenna, Skin Thickness 0.051" 4-197
Figure 4-134 Sample Doubler Location, Teardrop Footprint Antenna, Metal Skin Aircraft 4-197
Figure 4-135 Skin Cutout Detail, Teardrop Footprint Antenna, Skin Thickness 0.032" 4-198
Figure 4-136 Skin Cutout Detail, Teardrop Footprint Antenna, Skin Thickness 0.049" 4-198
Figure 4-137 Skin Cutout Detail, Teardrop Footprint Antenna, Skin Thickness 0.051" 4-199
Figure 4-138 Doubler Installation, Teardrop Footprint Antenna, Skin Thickness 0.032" 4-199

Figure 4-139 Doubler Installation, Teardrop Footprint Antenna, Skin Thickness 0.049" 4-200
Figure 4-140 Doubler Installation, Teardrop Footprint Antenna, Skin Thickness 0.051" 4-200
Figure 4-141 Doubler Design, ARINC 743 Footprint Antenna, Skin Thickness 0.032" 4-203
Figure 4-142 Doubler Design, ARINC 743 Footprint Antenna, Skin Thickness 0.049" 4-204
Figure 4-143 Doubler Design, ARINC 743 Footprint Antenna, Skin Thickness 0.051" 4-205
Figure 4-144 Sample Doubler Location, ARINC 743 Antenna, Metal Skin Aircraft 4-206
Figure 4-145 Skin Cutout Detail, ARINC 743 Footprint Antenna, Skin Thickness 0.032" 4-206
Figure 4-146 Skin Cutout Detail, ARINC 743 Footprint Antenna, Skin Thickness 0.049" 4-207
Figure 4-147 Skin Cutout Detail, ARINC 743 Footprint Antenna, Skin Thickness 0.051" 4-207
Figure 4-148 Doubler Installation, ARINC 743 Footprint Antenna, Skin Thickness 0.032" 4-208
Figure 4-149 Doubler Installation, ARINC 743 Footprint Antenna, Skin Thickness 0.049" 4-208
Figure 4-150 Doubler Installation, ARINC 743 Footprint, Skin Thickness 0.051" 4-209
Figure 4-151 Installation of ARINC 743 Footprint Antenna 4-209
Figure 4-152 GA 35 Installation Drawing 4-210
Figure 4-153 GA 36 Installation Drawing 4-211
Figure 4-154 GA 37 Installation Drawing 4-212
Figure 4-155 GA 55 Installation Drawing 4-213
Figure 4-156 GA 55A Installation Drawing 4-214
Figure 4-157 GA 56 Installation Drawing 4-215
Figure 4-158 GA 57X Installation Drawing 4-216
Figure 4-159 GA 35 Antenna Dimensions 4-217
Figure 4-160 GA 35S Antenna Dimensions 4-218
Figure 4-161 GA 36 Antenna Dimensions 4-219
Figure 4-162 GA 37 Antenna Dimensions 4-220
Figure 4-163 GA 55 Antenna Dimensions 4-221
Figure 4-164 GA 55A Antenna Dimensions 4-222
Figure 4-165 AXIS Flight Display Antenna (Single Antenna) Interconnect 4-225
Figure 4-166 AXIS Flight Display Antenna (Diplexer) Interconnect 4-226
Figure 4-167 AXIS Flight Display Antenna (External VHF/NAV) Interconnect 4-228
Figure 4-168 AXIS Flight Display Antenna Interconnect (External VHF/NAV, Diplexer) 4-229
Figure 4-169 CHT Probe Package 4-231
Figure 4-170 CHT Probe Well 4-231
Figure 4-171 One Piece CHT Probe Installed 4-232
Figure 4-172 EGT Package 4-233
Figure 4-173 Exhaust Pipe Drilled 4-234
Figure 4-174 Installed EGT Probe Orientation 4-234
Figure 4-175 Vent Plug 4-235
Figure 4-176 Oil Temperature Probe 4-235
Figure 4-177 Oil Temperature Probe Installed 4-235
Figure 4-178 Pressure Transducer Mounting 4-236
Figure 4-179 Tachometer Drive Output 4-238
Figure 4-180 Installed Tachometer Sensor 4-238
Figure 4-181 Magneto Bleed Port 4-239
Figure 4-182 Plugs on Slick/Unison 43XX Magneto 4-240
Figure 4-183 Magneto Tachometer Sensor Installed 4-240
Figure 4-184 Ammeter Shunt 4-244
Figure 4-185 Example Floscan Fuel Flow Sensor 4-246
Figure 4-186 Carb Temp Sensor Mounting Location 4-247
Figure 4-187 Carb Temp Sensor Mounting Location w/ Screw Removed 4-247
Figure 4-188 Carb Temp Sensor Installed 4-247

Figure 5-1 System Configuration Map 5-5
Figure 5-2 System Type Selection 5-6
Figure 5-3 Bezel Keys and Knobs 5-7
Figure 5-4 Icons 5-8
Figure 5-5 Software Version Pop-up Window 5-9
Figure 5-6 Software Update Page 5-9
Figure 5-7 Hard Disk Icon 5-9
Figure 5-8 Device Application 5-11
Figure 5-9 AXIS Display Page 5-15
Figure 5-10 Other Modify Page Fields 5-16
Figure 5-11 Glide Information Before Configuration 5-25
Figure 5-12 Example Glide Chart from Cessna 172 AFM/POH 5-26
Figure 5-13 Example Glide Information Statement from Bonanza A-36 AFM/POH 5-26
Figure 5-14 Glide Ratio Calculator 5-27
Figure 5-15 Gauge Priority Screen 5-58
Figure 5-16 Volts 1/2 Page 5-65
Figure 5-17 Sensor Inputs Page - VPX Electrical 5-67
Figure 5-18 Fuel Quantity Calibration Example 5-72
Figure 5-19 Elevator Trim Calibration 5-74
Figure 5-20 Input Voltage 5-75
Figure 5-21 Edit Calibration Point 5-75
Figure 5-22 Discrete Input 1 Alert Label 5-87
Figure 5-23 Discrete Input 1 Input Type 5-87
Figure 5-24 Discrete Input 1 Input Function 5-88
Figure 5-25 Gauge Priority Screen 5-93
Figure 5-26 Cockpit Lighting Page 5-108
Figure 5-27 DC Output 1 Page 5-109
Figure 5-28 DC Output 1 Calibrated Page 5-109
Figure 5-29 Flight Data Logs Page 5-114
Figure 5-30 Configuration Export 5-118
Figure 5-31 Miscellaneous Config Page 5-119
Figure 5-32 Confirmation of Import File Page 5-120
Figure 5-33 Confirm Import Page 5-120
Figure 5-34 Advanced Import Page 5-121
Figure 5-35 Preview Calibration Page 5-121
Figure 5-36 Save Summary Key 5-122
Figure 5-37 Bluetooth Connection Settings 5-124
Figure 5-38 Pair Bluetooth Devices 5-124
Figure 5-39 Searching for Devices 5-125
Figure 5-40 Enable Autoreconnect 5-125
Figure 5-41 Bluetooth Device Paired 5-126
Figure 6-1 In-Flight Level Cruise Attitude 6-5
Figure 6-2 Aircraft Alignment 6-12
Figure 6-3 Angle of Attack (AOA) Illustration 6-25
Figure 6-4 AOA Display 6-27
Figure 6-5 360º and 540º Cable Wrap Examples 6-34
Figure 6-6 Normal Roll Servo Direction 6-36
Figure 6-7 Reverse Roll Servo Direction 6-37
Figure 6-8 Normal Pitch Servo Direction 6-37
Figure 6-9 Reverse Pitch Servo Direction 6-38

Figure 6-10 Normal Yaw Damper Servo Direction 6-38
Figure 6-11 Reverse Yaw Servo Direction 6-38
Figure 6-12 Nose Down, Left Bank 6-40
Figure 6-13 Nose Down, Right Bank 6-41
Figure 6-14 Nose Up, Right Bank 6-42
Figure 6-15 Nose Up, Left Bank 6-42
Figure A-1 GDU 116B Unit View (Back with Connectors) A-5
Figure A-2 GDU 116C Unit View (Back with Connectors) A-5
Figure A-3 GDU 116NC Unit View (Back with Connectors) A-6
Figure A-4 GDU 116B/C/NC J1011 Connector A-7
Figure A-5 GDU 116B/C/NC J1012 Connector A-8
Figure A-6 GDU 116C/NC J1013 Connector A-10
Figure A-7 GDU 116C/NC J1015 Connector A-12
Figure A-8 GSU 25D J251 Connector A-29
Figure A-9 GSU 25 J252 Connector A-30
Figure A-10 GTP 59 ..... A-34
Figure A-11 GTP 59 Wire Color Designations A-34
Figure A-12 GMU 11 J111 Connector A-35
Figure A-13 GMU 44(B) Connector A-37
Figure A-14 J441 on GMU 22/44 ..... A-38
Figure A-15 GEA 24 Connectors A-40
Figure A-16 GEA 24 J244 Connector A-41
Figure A-17 J241 Connector A-42
Figure A-18 J242 Connector A-43
Figure A-19 J243 Connector A-45
Figure A-20 GEA 24 EIS #2 Configuration A-54
Figure A-21 J5701 Connector A-57
Figure A-22 J281 Connector A-60
Figure A-23 J271 Connector A-63
Figure A-24 J272 Connector A-65
Figure A-25 TB273 on GAD 27 ..... A-66
Figure A-26 J291 on GAD 29/29B/29C/29D A-72
Figure A-27 J292 on GAD 29/29B/29C/29D A-73
Figure A-28 View of J2001 connector A-76
Figure A-29 GI 260 Pigtail Harness A-78
Figure A-30 GSU 75 Connector A-79
Figure A-31 GSU 75 J751 Connector A-80
Figure A-32 GEA 110 Connectors A-82
Figure A-33 J1101 Connector A-83
Figure A-34 J1102 Connector A-84
Figure A-35 J2001 Connector A-91
Figure A-36 GCO 14 P1000 Connector A-97
Figure A-37 GDL 52R J521 Connector A-98
Figure A-38 GTR 205R(x) Connector A-99
Figure A-39 CAN Bus Pins A-106
Figure B-1.1 AXIS Flight Display Power, Config Module, and HSDB Interconnect B-4
Figure B-1.2 RS-232 Interconnect B-6
Figure B-1.3 CAN Bus Interconnect B-7
Figure B-1.4 GMU 11/GSU 25D/GTP 59 Interconnect B-8
Figure B-1.5 GMU 22/44/44(B)/GSU 25/GTP 59 Interconnect B-9

Figure B-1.6 GSU 75/GMU 44(B) Interconnect B-10
Figure B-1.7 GSU 75 – AXIS Interconnect B-11
Figure B-1.8 GEA 24(B) Power Interconnect B-12
Figure B-2.1 GNX 375 Navigator Interconnect B-13
Figure B-2.2 GPS 175/GNC 355 Navigator Interconnect B-14
Figure B-2.3 Single GTN Xi Navigator Interconnect B-15
Figure B-2.4 Single GTN Series Navigator Interconnect B-16
Figure B-2.5 GNC 215/GNC 255 Interconnect B-17
Figure B-2.6 GTR 205(R)(x) Interconnect B-18
Figure B-2.7 GTR 200(B)/20/225 Interconnect B-19
Figure B-2.8 SL30/SL40 Interconnect B-20
Figure B-2.9 Single GNS 430W/530W Interconnect B-21
Figure B-2.10 GNS 480 Interconnect B-22
Figure B-2.11 TO/GA Switch Interconnect B-23
Figure B-3.1 GTX 45R Transponder Connection Method Interconnect B-24
Figure B-3.2 GTX 345/345R/345D/345DR Transponder Interconnect B-25
Figure B-3.3 GTX 23ES/32/327/328/33(ES)/330(ES)/325/335/335D/335R/335DR/35R B-26
Figure B-3.4 GTS 8XX and 8X5 Traffic Receiver Interconnect B-27
Figure B-4.1 GDL 50/52(R) Interconnect B-28
Figure B-5.1 GMC 507/GSA 28 Interconnect B-29
Figure B-5.2 GSA 28 Roll and Pitch Trim Interconnect B-30
Figure B-5.3 Trim Switch Interconnect B-31
Figure B-6.1 GAD 27 Trim Control Interconnect B-32
Figure B-6.2 GAD 27 External and Cockpit Lighting, Power and Flaps Interconnect B-33
Figure B-6.3 GAD 27 Discrete Input Interconnect B-34
Figure B-6.4 GAD 27 Lighting Bus Control Interconnect B-35
Figure B-6.5 GAD 27 Keep Alive Power Interconnect B-36
Figure B-6.6 GAD 27 Absolute Position Flaps Control (3-position Switch) Interconnect B-37
Figure B-6.7 GAD 27 Absolute Position Flaps Control (Push-Button Switch) Interconnect B-38
Figure B-6.8 GAD 27 Absolute Position Flaps Control (Rotary Switch) Interconnect B-38
Figure B-7.1 Standby Flight Display (GI 275) Interconnect B-39
Figure B-7.2 GHA 15 Radio AGL Interconnect B-40
Figure B-7.3 Serial Devices (ELT and Vertical Power VP-X) Interconnect B-41
Figure B-7.4 Reserved B-42
Figure B-7.5 Carbon Monoxide Interconnect B-43
Figure B-7.6 GI 260 Interconnect B-44
Figure B-8.1 AXIS Flight Display (C or N/C) Internal Audio Panel Interconnect B-45
Figure B-8.2 AXIS Flight Display Alert and COM Audio Interface B-48
Figure B-8.3 GMA 245RM Interconnect B-49
Figure B-8.4 GTR 20/200B VHF COM Interconnect B-55
Figure B-8.5 GTR 20/200B VHF COM with Intercom Interconnect B-56
Figure B-8.6 GMA 342/345 Interconnect B-58
Figure B-9.1 GEA 24(B) Temperature Sensors B-59
Figure B-9.2 GEA 24(B) Pressure Sensors B-60
Figure B-9.3 GEA 24(B) RPM Sensors B-61
Figure B-9.4 GEA 24(B) Current, Voltage, and Flow Sensors B-63
Figure B-9.5 GEA 24(B) Fuel Quantity Wiring B-64
Figure B-9.6 GEA 24(B) General Purpose Sensors B-66
Figure B-9.7 GEA 110 Temperature and Flow Sensors B-68
Figure B-9.8 GEA 110 Temperature Sensors B-69

Figure B-9.9 GEA 110 Pressure Sensors B-70
Figure B-9.10 GEA 110 RPM Sensors B-71
Figure B-9.11 GEA 110 Current and Voltage Sensors B-72
Figure B-9.12 GEA 110 Fuel Quantity Wiring B-73
Figure B-9.13 GEA 110 General Purpose Sensors B-74
Figure B-9.14 GDU 116C/NC Discretes B-76
Figure B-9.15 GEA 24(B) Discretes B-78
Figure B-9.16 GEA 110 Discretes B-80
Figure B-9.17 P-Lead Resistor Installation - Braid Shield B-81
Figure B-9.18 P-Lead Resistor Installation - Stranded Wire Shield B-82
Figure B-9.19 Fuse Holder Assembly B-83
Figure B-10.1 GEA 24(B) Lycoming/Continental Interface (4- and 6-Cylinder) B-84
Figure B-10.2 GEA 24(B) Lycoming/Continental Interface (4- and 6-Cylinder) B-85
Figure B-10.3 GEA 110 Lycoming/Continental Interface (4- and 6-Cylinder) B-86
Figure B-10.4 GEA 110 Lycoming/Continental Interface (4- and 6-Cylinder) B-87
Figure B-11.1 GEA 24(B) PT6A Interconnect B-88
Figure B-11.2 GEA110 PT6A Interconnect B-89
Figure B-12.1 GEA 24(B) Rotax Interconnect B-90
Figure B-12.2 GEA 24(B) Rotax Interconnect B-91
Figure B-12.3 GEA 110 Rotax Interconnect B-92
Figure B-12.4 GEA 24 FADEC Interconnect B-93
Figure E-1 Logic Signal Editor Page E-9
Figure E-2 Onscreen Keyboard E-9
Figure E-3 Default Output Node Screen E-10
Figure E-4 Node Options Pop-up E-10
Figure E-5 Node Type Pop-up E-11
Figure E-6 AND Node E-11
Figure E-7 Top of AND Gate E-12
Figure E-8 Node Type Page E-13
Figure E-9 Oil Temperature Trigger Page E-13
Figure E-10 Bottom of AND Gate E-14
Figure E-11 RPM Limited Signal Page E-14
Figure E-12 New Gauge Marking Settings E-15
Figure F-1 G3X Block Diagram F-3
Figure F-2 Example HSDB Architecture Diagram F-11
Figure F-3 Generic HSDB Interconnect Diagram F-12
Figure J-1 Software Version Pop-up Window J-22
Figure J-2 System Software Update Key J-23
Figure J-3 Updating System Software Progress J-23
Figure J-4 System Update Status J-24
Figure J-5 Summary Key J-24
Figure J-6 Failure Screen J-25
Figure J-7 Force Load Software Page J-26
Figure J-8 System Summary Page J-27
Figure J-9 System Software Version Screen J-28

LIST OF TABLES

Table 1-1 Installation Check List....1-3
Table 1-2 AXIS Flight Display Features....1-4
Table 3-1 Garmin LRU HSDB Port Summary....3-10
Table 3-2 AXIS Flight Displays....3-17
Table 3-3 AXIS Flight Display Install Kits [1]....3-17
Table 3-4 AXIS Flight Display System LRUs....3-18
Table 3-5 Contents of AXIS Standard LRU (P/N 010-04556-00)....3-19
Table 3-6 Contents of High Performance AXIS LRU Kit* (P/N 010-04556-01)....3-19
Table 3-7 AXIS System LRU Kits....3-20
Table 3-8 Approved Ethernet (HSDB) Cables....3-22
Table 3-9 Approved CAN Bus Wire....3-23
Table 3-10 Recommended Crimp Tools....3-26
Table 3-11 High Density Pins for Positioner M22520/2-07....3-31
Table 3-12 Standard Density Pins and Sockets for Positioner M22520/2-08....3-32
Table 3-13 High Density Pins for Positioner M22520/2-09....3-32
Table 3-14 GDU 116 - J1012 Connector (5A Pins) Current Draw....3-41
Table 3-15 LRU Current Draw....3-41
Table 3-16 GDU 116 - J1012 Connector (5A Pins) Current Draw....3-44
Table 3-17 GDU 116 - J1015 Connector (3A Pins) Current Draw....3-44
Table 3-18 GDU 116 - J1011 Connector (5A Pins) Current Draw....3-44
Table 3-19 Probe Temperatures....3-45
Table 4-1 GMU 44(B) Connector Assembly....4-17
Table 4-2 GHA 15 Connector Components....4-20
Table 4-3 AXIS Flight Displays....4-26
Table 4-4 AXIS Flight Display Install Kits [1]....4-26
Table 4-5 Contents of GDU 116B New Installation Kit....4-27
Table 4-6 Contents of GDU 116C or GDU 116NC, New Installation....4-27
Table 4-7 Contents of GDU 116B, G3X Touch Upgrade Kit....4-28
Table 4-8 Contents of GDU 116C or GDU 116NC, G3X Touch Upgrade Kit....4-28
Table 4-9 AXIS Flight Display Weight and Size....4-30
Table 4-10 VFR GPS Antenna Weight and Size....4-30
Table 4-11 GSU 25 Equipment Available....4-40
Table 4-12 Contents of 9-pin Connector Kit (P/N 011-03002-00)....4-40
Table 4-13 Contents of 15 Pin Connector Kit (P/N 011-03002-01)....4-40
Table 4-14 GSU 25 Power and Current....4-45
Table 4-15 GSU 25 Dimensions and Weights....4-45
Table 4-16 GTP 59 Part Number....4-51
Table 4-17 GTP 59 OAT Kit (P/N 011-00978-00)....4-51
Table 4-18 GMU 11 Part Numbers....4-55
Table 4-19 GMU 11 Accessories....4-55
Table 4-20 Contents of GMU 11 Installation Kit (P/N 011-04349-90)....4-56
Table 4-21 Recommended Distance from Magnetic Disturbances....4-57
Table 4-22 GMU 11 Power and Current....4-58
Table 4-23 GMU 11 Dimensions and Weights....4-58
Table 4-24 GMU 22/44(B) Part Numbers....4-64
Table 4-25 GMU 22 Accessories....4-64
Table 4-26 GMU 44(B) Accessories....4-64
Table 4-27 GMU 44(B) Connector Kit Contents (P/N 011-04205-00)....4-64

Table 4-28 Recommended Distance from Magnetic Disturbances 4-65
Table 4-29 GMU 22 Power and Current 4-67
Table 4-30 GMU 22 Dimensions and Weights 4-67
Table 4-31 GMU 44(B) Weight and Size 4-67
Table 4-32 GEA 24 Part Numbers 4-77
Table 4-33 Contents of GEA 24 Connector Kit (P/N 011-02886-00) 4-78
Table 4-34 GEA 24 Power and Current 4-79
Table 4-35 GEA 24 Dimensions and Weights 4-79
Table 4-36 Available LRU Part Numbers 4-83
Table 4-37 Contents of Connector Kit (P/N 011-01824-01) 4-83
Table 4-38 GMC 507 Installation Rack Kit (P/N 010-12700-10) 4-83
Table 4-39 GMC 507 Power and Current 4-85
Table 4-40 GMC 507 Dimensions and Weights 4-85
Table 4-41 GSA 28 Part Numbers 4-94
Table 4-42 GSA 28 Available Equipment 4-95
Table 4-43 Contents of Connector Kit (P/N 011-02950-00) 4-95
Table 4-44 Contents of Connector Kit, 90° (P/N 011-02950-01) 4-96
Table 4-45 GSA 28 General Specifications 4-106
Table 4-46 GSA 28 Power Specifications 4-106
Table 4-47 GSA 28 Torque Specifications 4-106
Table 4-48 GAD 27 Part Numbers 4-135
Table 4-49 Contents of GAD 27 Connector Kit (P/N 011-03877-00) 4-135
Table 4-50 GAD 27 Power and Current 4-135
Table 4-51 GAD 27 Dimensions and Weights 4-135
Table 4-52 GAD 29 Part Numbers 4-139
Table 4-53 Contents of GAD 29 Connector Kit (P/N 011-03271-00) 4-139
Table 4-54 GAD 29 Power and Current 4-140
Table 4-55 GAD 29 Dimensions and Weights 4-140
Table 4-56 GAP 26 Part Numbers 4-146
Table 4-57 Contents of GAP 26 Adjustable Mounting Kit (P/N 011-03609-00) 4-146
Table 4-58 GAP 26 Initial Current Draw vs. Probe Temperature (-10 and -20 Units) 4-161
Table 4-59 GAP 26 Weight and Size 4-161
Table 4-60 GHA 15 Part Numbers 4-165
Table 4-61 GHA Available Accessories 4-165
Table 4-62 Contents of GHA 15 Connector Kit (P/N 011-05278-00) 4-165
Table 4-63 Contents of GHA 15 Install Kit (P/N 011-06097-00) 4-165
Table 4-64 GHA 15 Mounting Specifications 4-167
Table 4-65 GHA 15 Power and Current 4-168
Table 4-66 GHA 15 Dimensions and Weights 4-168
Table 4-67 GI 260 Part Numbers 4-171
Table 4-68 GI 260 Power and Current 4-171
Table 4-69 GI 260 Dimensions and Weights 4-171
Table 4-70 Required Equipment 4-173
Table 4-71 GEA 110 Kit Contents 4-173
Table 4-72 GEA 110 Weight and Size 4-174
Table 4-73 Required Equipment 4-177
Table 4-74 GSU 75 Kit Contents 4-177
Table 4-75 GSU 75 Weight and Size 4-178
Table 4-76 GCO 14 Available Equipment 4-180
Table 4-77 Contents of Cable Kit (P/N 011-06537-10) 4-180

Table 4-78 GCO 14 Weight and Size 4-184
Table 4-79 GPS Antenna TNC Connector 4-188
Table 4-80 Ground Plane Requirements 4-193
Table 4-81 Teardrop Footprint Antenna Doubler Design and Installation 4-194
Table 4-82 ARINC 743 Footprint Antenna Doubler Design and Installation 4-201
Table 4-83 Antenna Installation 4-217
Table 5-1 LRU Minimum Software Versions 5-4
Table 5-2 Status Indication 5-12
Table 5-3 Units of Measure Settings 5-23
Table 5-4 V-Speeds - Needs Work 5-28
Table 5-5 COM Radio Supported Functions 5-46
Table 5-6 COM RX Auto Squelch Settings 5-48
Table 5-7 COM Carrier Squelch Settings 5-48
Table 5-8 COM RX Auto Squelch Settings 5-50
Table 5-9 COM Carrier Squelch Settings 5-50
Table 5-10 GTX RS-232 Port Configuration 5-54
Table 5-11 Discrete Inputs 5-81
Table 5-12 PFD Discrete Inputs 5-82
Table 5-13 Aircraft Discrete Inputs 5-83
Table 5-14 Communications Discrete Inputs 5-85
Table 5-15 Total Time Record Mode Selections 5-90
Table 5-16 Roll Tab, Autopilot Configuration Settings 5-97
Table 5-17 Pitch Tab, Autopilot Configuration Settings 5-98
Table 5-18 Yaw Damper Autopilot Configuration Settings 5-98
Table 5-19 Roll Trim Configuration Settings 5-100
Table 5-20 Pitch Trim Configuration Settings 5-102
Table 5-21 Yaw Trim Configuration Settings 5-103
Table 5-22 EFIS Airdata Format 1 5-128
Table 5-23 EFIS Airdata Format 2 5-129
Table 6-1 LRU Status indication 6-2
Table 6-2 Example Magnetometer Interference Test Sequence List 6-11
Table 6-3 Localizer/Glideslope Checks 6-15
Table 6-4 Example EMI Victim/Source Matrix 6-23
Table 6-5 Blank EMI Victim/Source Matrix 6-24
Table A-1 GDU 116B Mating Connectors A-4
Table A-2 GDU 116C Mating Connectors A-4
Table A-3 GDU 116NC Mating Connectors A-4
Table A-4 GDU 116B/C/NC J1011 Connector A-7
Table A-5 GDU 116B/C/NC J1012 Connector A-9
Table A-6 GDU 116C/NC J1013 Connector A-11
Table A-7 GDU 116C/NC J1015 Connector A-13
Table A-8 HSDB (Ethernet) Ports A-14
Table A-9 Configuration Module A-14
Table A-10 Discrete Inputs A-15
Table A-11 Discrete Outputs A-16
Table A-12 RS-232 Ports A-17
Table A-13 ARINC 429 In A-18
Table A-14 ARINC 429 Out A-18
Table A-15 RS-485 Ports A-19
Table A-16 CAN Bus A-19

Table A-17 J1011 Pins....A-20
Table A-18 J1012 Pins....A-21
Table A-19 J1013 Pins....A-21
Table A-20 J1015 Pins....A-21
Table A-21 PPS Time Mark Pins....A-21
Table A-22 Lighting Bus Pins on J1012....A-22
Table A-23 Headset Audio Pins....A-24
Table A-24 MIC IN Audio Pins....A-24
Table A-25 Pilot/Copilot PTT Pins....A-25
Table A-26 Alert Audio In Pins....A-25
Table A-27 External NAV Audio In Pins....A-25
Table A-28 External COM Audio In Pins....A-25
Table A-29 External COM PTT Key Out Pins....A-26
Table A-30 External COM MIC Audio Out Pins....A-26
Table A-31 NAV Audio Out Pins....A-26
Table A-32 COM Audio Out Pins....A-27
Table A-33 Speaker Output Pins....A-27
Table A-34 Speaker Output Pins....A-28
Table A-35 TX Interlock Out Pins....A-28
Table A-36 GSU 25D Connectors....A-29
Table A-37 GSU 25D J251 Connector....A-29
Table A-38 GSU 25 J252 Connector....A-30
Table A-39 GSU 25 RS-232 Pins....A-31
Table A-40 GSU 25 RS-485 Input Pins....A-31
Table A-41 GSU 25 CAN Bus Pins....A-31
Table A-42 GSU 25 Temperature Input Pins....A-32
Table A-43 GSU 25 Unit ID Pins....A-32
Table A-44 GSU 25 ADAHRS Pins....A-32
Table A-45 Aircraft Power and Ground....A-33
Table A-46 Magnetometer Power and Ground....A-33
Table A-47 GTP 59 3-Conductor Shielded Cable....A-34
Table A-48 GMU 11 Connector....A-35
Table A-49 GMU 11 J111 Connector....A-35
Table A-50 GMU 11 Power Function Pins....A-36
Table A-51 GMU 11 Unit ID Pins....A-36
Table A-52 GMU 11 CAN Bus Pins....A-36
Table A-53 GMU 44(B) Connector....A-37
Table A-54 GMU 44(B) P442 Connector....A-37
Table A-55 J441 Pins....A-38
Table A-56 GMU 22 Power Pins....A-39
Table A-57 GMU 22 RS-232 Pins....A-39
Table A-58 GMU 22 RS-485 Pins....A-39
Table A-59 GEA 24 Connectors....A-40
Table A-60 GEA 24 J244 Connector....A-41
Table A-61 J241 Pins....A-42
Table A-62 GEA 24 J242 Connector....A-44
Table A-63 GEA 24 J243 Connector....A-46
Table A-64 GEA 24 Aircraft Power Pins....A-47
Table A-65 GEA 24 CAN Bus Pins....A-47
Table A-66 GEA 24 RS-232 Pins....A-47

Table A-67 GEA 24 Digital Input Pins A-48
Table A-68 GEA 24 Discrete Input Pins A-49
Table A-69 GEA 24 Discrete Output Pins. A-50
Table A-70 GEA 24 Fuel Quantity Pins A-51
Table A-71 GEA 24 GP Pins A-52
Table A-72 GEA 24 Pressure Input Pins A-53
Table A-73 GEA 24 Voltage Input Pins A-53
Table A-74 GEA 24 Shunt Pins A-53
Table A-75 GEA 24 System ID Pins A-54
Table A-76 GEA 24 Temperature Input Pins A-55
Table A-77 GEA 24 Transducer Output Power Pins A-56
Table A-78 J5701 Pins A-57
Table A-79 GMC 507 Power Pins A-58
Table A-80 GMC 507 Power Pins A-58
Table A-81 GMC 507 Lighting Pins A-58
Table A-82 GMC 507 TO/GA Discrete In Pins A-59
Table A-83 GMC 507 Unit ID Pins A-59
Table A-84 J281 on GSA 28 ..... A-60
Table A-85 GSA 28 Power Pins A-61
Table A-86 GSA 28 CWS/Disconnect Pins A-61
Table A-87 GSA 28 CAN Bus Pins A-61
Table A-88 GSA 28 ID Strap Pins A-61
Table A-89 GSA 28 RS-232 Pins A-62
Table A-90 GSA 28 Trim Pins A-62
Table A-91 J271 on GAD 27 ..... A-64
Table A-92 J272 Connector A-65
Table A-93 GAD 27 TB273 Pins A-66
Table A-94 GAD 27 Power Pins A-67
Table A-95 GAD 27 CAN Bus Pins A-67
Table A-96 GAD 27 Discrete Input Pins A-67
Table A-97 GAD 27 Relative Flap Position Inputs A-68
Table A-98 GAD 27 Absolute Flap Position Inputs A-68
Table A-99 GAD 27 J271 Lighting Bus Inputs A-69
Table A-100 GAD 27 J271 Lighting Bus Outputs A-69
Table A-101 GAD 27 J271 External Lighting Discrete Inputs A-70
Table A-102 GAD 27 J271 Motor Disconnect Input A-70
Table A-103 GAD 27 J271 Pitch Trim Inputs A-71
Table A-104 GAD 27 J271 Roll Trim Inputs A-71
Table A-105 GAD 29/29B/29C/29D A-72
Table A-106 GAD 29/29B/29C/29D J292 Connector A-73
Table A-107 GHA 15 J2001 Connector A-76
Table A-108 GHA 15 Aircraft Power Pins A-77
Table A-109 GHA 15 CAN Bus Pins A-77
Table A-110 GHA 15 USB Pins A-77
Table A-111 GI 260 Pins A-78
Table A-112 GSU 75 Connector A-79
Table A-113 GSU 75 J751 Connector A-80
Table A-114 GEA 110 Connectors A-82
Table A-115 GEA 110 J1101/P1101 Connector A-83
Table A-116 GEA 110 J1102 Connector A-85

Table A-117 Power Pins A-86
Table A-118 Configuration Module Pins A-86
Table A-119 Analog Inputs A-87
Table A-120 Digital Inputs A-88
Table A-121 Analog/CCS Inputs A-88
Table A-122 Analog/CCS/Digital Inputs A-88
Table A-123 Current Monitor Inputs A-89
Table A-124 Discrete Outputs A-89
Table A-125 Configurable Discrete Inputs A-89
Table A-126 RS-485 Channels A-90
Table A-127 Transducer Power Out Pins A-90
Table A-128 GEA System ID Program Pins A-90
Table A-129 GTR 20 J2001 Connector A-92
Table A-130 GTR 20 Power Pins A-93
Table A-131 GTR 20 CAN Bus Pins A-93
Table A-132 GTR 20 Unit ID Pins A-93
Table A-133 GTR 20 MIC Pins A-93
Table A-134 GTR 20 AUX Mono Audio A-94
Table A-135 GTR 20 Headset Audio Pins A-94
Table A-136 GTR 20 Music Input Pins A-94
Table A-137 GTR 20 Receiver Audio Pins A-95
Table A-138 GTR 20 PTT Pins A-95
Table A-139 GTR 20 TX Interlock Pins A-96
Table A-140 GTR 20 Discrete Input Pins A-96
Table A-141 GCO 14 Connector A-97
Table A-142 GCO 14 P1000 Connector A-97
Table A-143 GDL 52R Connector A-98
Table A-144 GDL 52R J521 Connector A-98
Table A-145 GTR 205R(x) Pins A-100
Table A-146 Power and Ground Pins A-102
Table A-147 Lighting Pins A-102
Table A-148 Antenna Pins A-102
Table A-149 RS-232 Pins A-102
Table A-150 MIC Pins A-103
Table A-151 COM Audio Pins A-103
Table A-152 COM Discrete Inputs A-104
Table A-153 Configurable Discrete Input Pins A-104
Table A-154 Configuration Module A-105
Table A-155 AUX Pins A-105
Table A-156 CAN Bus Pins A-106
Table A-157 GTR/GNC Ethernet (HSDB) Pins A-106
Table A-158 Headset Output Pins A-107
Table A-159 Discrete Output Pins A-107
Table C-1 GI 275 ..... C-3
Table C-2 GPS 175 ..... C-5
Table C-3 GNC 355 ..... C-6
Table C-4 GNX 375 ..... C-7
Table C-5 GTN Xi Series Navigators C-8
Table C-6 GTN Series Navigators C-9
Table C-7 GNS Series Navigators C-10

Table C-8 GNS 480 Navigator C-11
Table C-9 GTR 200(B) C-12
Table C-10 GTR 20 ..... C-12
Table C-11 GTR 205(x) HSDB/CAN (Recommended) C-13
Table C-12 GTR 205(x) Serial C-13
Table C-13 GTR 205R(x) C-14
Table C-14 GTR 225 ..... C-14
Table C-15 SL 40 ..... C-14
Table C-16 SL 30 ..... C-15
Table C-17 GNC 255 ..... C-15
Table C-18 GNC 215 HSDB Option (Recommended) C-16
Table C-19 GNC 215 Serial Option C-17
Table C-20 GTX 345/345D HSDB Option (Recommended) C-18
Table C-21 GTX 345/345D Serial Option C-18
Table C-22 GTX 345R/345DR/45R HSDB Option (Recommended) C-19
Table C-23 GTX 345R/345DR/45R Serial Option C-19
Table C-24 GTX 327/328/330/330ES C-19
Table C-25 GTX 325/335/335D C-20
Table C-26 True Blue Battery Settings C-21
Table C-27 EarthX Battery Settings C-21
Table C-28 Contents of AXIS Flight Display Sensor Kit, 4 Cylinder Lycoming/Continental C-22
Table C-29 Contents of AXIS Flight Display Sensor Kit, 6 Cylinder Lycoming/Continental C-22
Table C-30 Contents of AXIS Flight Display Sensor Kit, Rotax 912 ..... C-24
Table C-31 Contents of AXIS Flight Display External Components for Rotax 912 RPM Signal Kit C-24
Table C-32 Rotax 914 Sensors C-24
Table C-33 Jabiru Sensors C-25
Table C-34 UL Power Sensors C-26
Table C-35 Sensors for Other Piston Engines C-27
Table C-36 Retrofit Engine Sensors C-28
Table C-37 Sensors for Turbine Engines C-29
Table C-38 Sensors for Rotorcraft Applications C-30
Table C-39 ROTAX FADEC CAS Alert Triggers C-30
Table C-40 Compatible Engine/Airframe Input Sensors C-31
Table C-41 Approved IFR GPS/WAAS Antennas C-36
Table C-42 GA 35S P/N 010-02639-00 ..... C-36
Table C-43 Compatible VFR GPS Antenna C-37
Table C-44 GPS or GPS/WAAS Antenna Minimum Requirements C-37
Table E-1 Node Types E-2
Table E-2 Operators E-5
Table E-3 Node Options - Trigger E-12
Table E-4 RPM Trigger Values E-14
Table E-5 Conditional Settings E-15
Table F-1 Checklist for Completion of G3X Touch Upgrade to AXIS Flight Display F-4
Table F-2 Device List Record F-7
Table F-3 G3X Touch P4502/4602/4702 and AXIS J1012 Connector F-14
Table F-4 LRU Minimum Software Versions F-19
Table G-1 GDU 116( ) Specifications G-2
Table G-2 IFR GPS/SBAS Specifications G-3
Table G-3 COM Transmitter Specifications G-4
Table G-4 COM Receiver Specifications G-4

Table G-5 VOR Specifications G-6
Table G-6 LOC Specifications G-7
Table G-7 Glideslope Specifications G-8
Table G-8 Transmitter Grant of Equipment Authorization G-9
Table G-9 General Specifications G-9
Table G-10 Performance Specifications G-10
Table G-11 GMC 305/307/507 Environmental Specifications G-12
Table G-12 GMU 11 Environmental Specifications G-12
Table G-13 GMU 22 Environmental Specifications G-12
Table G-14 GSA 28 Environmental Specifications G-12
Table G-15 GSU 25/25C Environmental Specifications G-13
Table G-16 GSU 25B and 25D Non-MOD 1 Environmental Specifications G-13
Table G-17 GSU 25D Environmental Specifications G-13
Table G-18 GSU 73 Environmental Specifications G-14
Table G-19 Applicable TSO/ETSOs for the GTP 59 ..... G-15
Table G-20 TSO/ETSO Deviations for the GTP 59 ..... G-15
Table G-21 GTR 20/200 Environmental Specifications G-16
Table G-22 FCC Grant of Equipment Authorization G-16
Table H-1 Attitude/Air Data Message Format H-2
Table H-2 Attitude/Air Data Set 2 Message Format H-3
Table H-3 Engine Data Message Format H-4
Table H-4 GPS PVT Message Format H-6
Table H-5 GPS Data Message Format H-7
Table H-6 EIS Parameter Information Message H-8
Table H-8 EIS Discrete Parameter Data Message H-9
Table H-7 EIS Parameter Information Message – Measurement Units H-9
Table H-9 EIS Numeric Parameter Data Message H-10
Table H-10 CNI Message Format H-11
Table J-1 Status LED Indications J-9
Table J-2 Unit Communication Error Messages J-13
Table J-3 GPS Status LED Indications J-29

1 AXIS FLIGHT DISPLAYS SYSTEM DESCRIPTION

1.1 Introduction 1-2
1.2 System Overview 1-2
1.2.1 Displays 1-4
1.2.2 Air Data Attitude Heading Reference Systems (ADAHRS) 1-6
1.2.3 Magnetometer 1-7
1.2.4 Angle of Attack (AOA) 1-8
1.2.5 Standby Instruments (G5 and GI 275) 1-8
1.2.6 Pitot-Static Connections 1-8
1.2.7 Engine Indication System (EIS) 1-9
1.2.8 ARINC 429 1-10
1.2.9 Navigation Receiver 1-11
1.2.10 COM Radios 1-17
1.2.11 NAV Radios 1-17
1.2.12 Autopilot 1-18
1.2.13 Transponders 1-20
1.2.14 Weather and Traffic 1-22
1.2.15 System Audio 1-23
1.2.16 Audio Panel 1-23
1.2.17 Electrical System 1-26
1.2.18 Video 1-26
1.2.19 Bluetooth 1-27
1.2.20 WiFi 1-27
1.2.21 Smart Glide Engine Out Assistance 1-28
1.2.22 Radio AGL 1-28
1.2.23 CO Detector 1-28
1.2.24 ELT 1-28
1.3 System Architecture Examples 1-29
1.3.1 CAN Architecture 1-29
1.3.2 HSDB Architecture Examples 1-30

1.1 Introduction

Mechanical and electrical information required for the installation of the AXIS™ flight display is provided in this manual. The information is intended to be a step-by-step guide to the installation, therefore it is important the steps in all sections be performed in order.

NOTE

A dedicated section of installation guidance exists to provide guidance for upgrading to an AXIS flight display system, from an existing G3X Touch installation. Refer to appendix F.

1.2 System Overview

AXIS flight displays are advanced technology avionics suites designed to integrate pilot/aircraft interaction into one central user interface. The system combines primary flight instrumentation, aircraft systems instrumentation, and navigational information, all displayed on up to six displays.

AXIS flight displays provide an intuitive touchscreen user interface with a wide array of standard and optional features. The system serves as the primary flight instrument interface, autopilot, engine instrument interface, communication, navigation and surveillance controller found in typical piston engine airplanes.

The system is composed of several sub-units, or LRUs, that have a modular design. LRUs can be installed directly behind the instrument panel, mounted to the panel in the case of a GDU or GMC control panel, or in a separate avionics bay if desired. This design eases troubleshooting and maintenance of the system. A failure or problem can be isolated to a particular LRU, which can be replaced. Each LRU has a particular function, or set of functions, that contributes to the system's operation.

LRUs in the AXIS flight display system are interconnected primarily using the Garmin High Speed Data Bus (HSDB) and a shared CAN bus network. Refer to section 3.2.1 for HSDB architecture and section 3.2.2 for CAN architecture guidelines. In addition to HSDB and CAN, AXIS flight displays can interface to a variety of other Garmin and third party devices using RS-232, RS-485, and ARINC 429 connections, providing the flexibility to suit a wide variety of aircraft.

Section 1 provides an introduction to the functional components of AXIS flight display systems. Section 2 and section 3 provide additional information necessary to complete a comprehensive plan for the installation, which starts in section 4.

NOTE

Complete the checklist in table 1-1 before the aircraft is modified.

Table 1-1 Installation Check List

Completed	Item	Reference
	System Overview	
❑	Select the AXIS flight Display units to be installed in the aircraft.	Section 1.2.1
❑	Select the system LRUs to be installed in the aircraft.	Section 1.2.2 through Section 1.2.24
	System Planning	
❑	Determine the identity and general installation location for each AXIS flight display.	Section 3.1.1
❑	Determine sensors required to support intended EIS installation.	Section 3.1.2
❑	Determine antennas required to support selected LRUs.	Section 3.1.3
❑	Create an HSDB block diagram of the system selected LRUs.	Section 3.2.1
❑	Create a CAN block diagram of the system selected LRUs.	Section 3.2.2
❑	Determine which connector kits, installation kits, and mounting racks are required to support intended installation.	Section 3.3.2
❑	Determine power distribution requirements for intended installation.	Section 3.4
	Installation Planning	
❑	Determine the Installation location of each AXIS display in the system.	Section 4.4.3.3
❑	Determine the ADAHRS location for remotely mounted units.	Section 4.4.4.3 Section 4.4.19.3
❑	Determine the GTP 59 OAT probe location.	Section 4.4.5.2
❑	Determine the GSU and GMU mounting location.	Section 4.4.6.3 Section 4.4.7.3
❑	Determine the GAP 26 probe mounting location.	Section 4.4.13.4.1
❑	Determine the EIS mounting location.	Section 4.4.8.4 Section 4.4.18.3
❑	Determine the GMC 507 mounting location.	Section 4.4.9.3
❑	Determine the GSA mounting location(s).	Section 4.4.10.5
❑	Determine the GAD 27 mounting location.	Section 4.4.11.3
❑	Determine the GAD 29B/C/D mounting location.	Section 4.4.12.3
❑	Determine the GHA 15 mounting location.	Section 4.4.14.3
❑	Determine the GI 260 mounting location.	Section 4.4.15.3
❑	Determine the GTR 205(x) / GTR 205R(x) mounting location.	Section 4.4.16

Completed	Item	Reference
❑	Determine the GCO 14 mounting location.	Section 4.4.20.3
❑	Determine the installation location for each antenna in the system.	Section 4.4.21.2.1 Section 4.4.21.3.1 Section 4.4.21.4.1

1.2.1 Displays

The foundation of an AXIS flight display system is one or more GDUs (Garmin Display Unit). A GDU is assigned as either a primary flight display (PFD) or multi-function display (MFD), with options for arranging display layouts and combining different types of data on a single display refer to section 3.1.1.

AXIS flight display system LRUs are capable of providing the following functionality:

- Primary flight window (PFW)
- Multi-function window (MFW)
- Engine indicating system (EIS)
- Remote or integrated VHF COM radio
- Integrated IFR GPS navigator
- VHF NAV receiver
- Integrated audio panel
- Traffic and weather receiver (ADS-B In)
- Angle of attack (AOA)
- Remote audio panel
- Carbon monoxide level

When at least two GDUs are installed, failure of one display unit will cause the system to automatically revert to a reversionary format. In this format, primary flight information, radio tuning information, and EIS (if installed) are displayed on the operational GDU.

The GDU 116B contains an internal WAAS GPS receiver that supports VFR navigation only. IFR navigation requires the GDU 116C, GDU 116NC, or an approved external IFR navigator.

Table 1-2 AXIS Flight Display Features

Unit	VFR GPS	IFR GPS	Audio Panel	COM Radio	NAV Radio
GDU 116B Base	✓				
GDU 116C COM		✓	✓	✓	
GDU 116NC (NAV/COM)		✓	✓	✓	✓

Each GDU 116 is primarily connected to the system via both HSDB and CAN bus, meaning each GDU in the system must make a connection to both the CAN bus and HSDB network. Additionally, the displays support a variety of other input/output ports to support various system functions as described in the following sections.

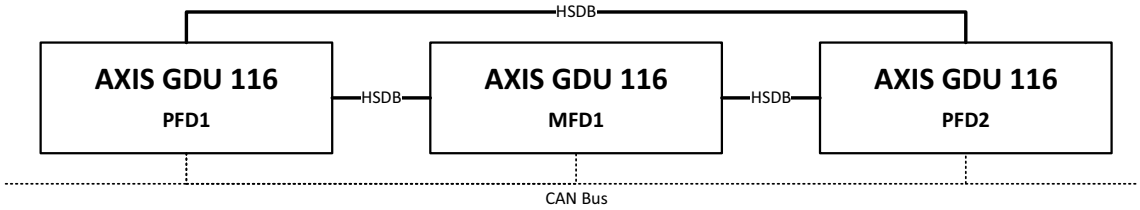

Figure 1-1 AXIS Flight Display Block Diagram

GDU 116( ) displays are mounted flush to the aircraft instrument panel. and were designed to occupy the same instrument panel opening used by the G3X Touch 11" (GDU 46X) display. GDU 116 displays uses the same mounting hole locations as the GDU 46X, however, the bezel of the GDU 116 is 0.075" larger than a GDU 46X on each side. Refer to appendix F for more information on upgrading from a G3X Touch system.

GDU 116C and GDU 116NC units require externally mounted VHF antennas to support the COM and NAV functions of the display and an externally mounted GPS antenna to support the IFR GPS function. GDU 116B units can use a glareshield mounted GPS antenna in favor of an externally mounted GPS antenna.

The AXIS flight display can be optionally provisioned for a connection to the positive battery terminal, hot side of master solenoid, or always-hot battery bus. This provision is for future support for support remote connectivity and database updates.

1.2.2 Air Data Attitude Heading Reference Systems (ADAHRS)

NOTE

If valid data is unavailable from all dedicated ADAHRS LRUs in the system, the GDUs will automatically display attitude and air data from an installed G5 or GI 275 standby flight displays (SFD).

An ADAHRS senses aircraft attitude, measures all air data parameters, and calculates aircraft heading. Up to three ADAHRS units are supported in an AXIS flight display system. In a system with multiple GDUs and multiple ADAHRS units, each display can present data from a separate ADAHRS and any GDU may also be switched to display data from any ADAHRS. Data from multiple ADAHRS units is also automatically cross-compared, and disagreements are noted on the PFW display.

1.2.2.1 GSU 25

The GSU 25 is the is the most common ADAHRS unit used in AXIS Flight Display Systems. Each GSU 25 ADAHRS is connected to pneumatic pressure inputs for Pitot, static, and optionally, angle of attack (AOA). If AOA is desired, connection of the AOA input is only required for GSU 25 #1, and is optional for GSU 25 #2 and #3. For aircraft capable of indicated airspeeds greater than 300 knots, the GSU 25D is used.

The GSU 25 communicates with other LRUs using the CAN bus, and can optionally (recommended) be connected to the PFD1 GDU using RS-232 for redundancy. For GSU 25 installation information, refer to section 4.4.4.

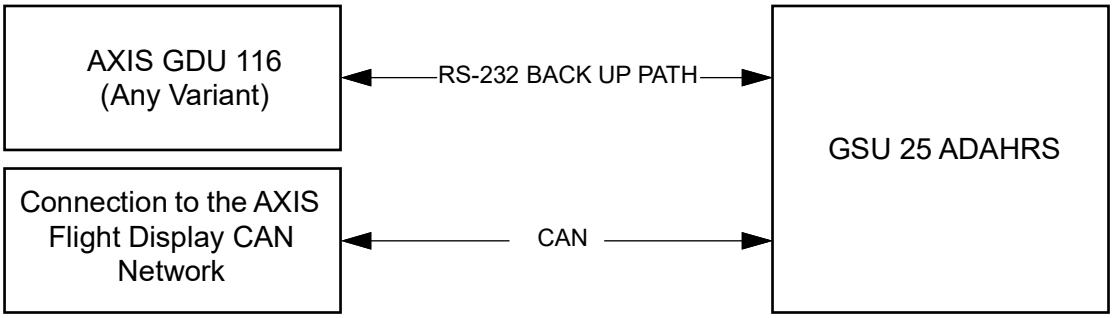

Figure 1-2 GDU 116( ) and GSU 25 Block Diagram

1.2.2.2 GSU 75

Up to two GSU 75 ADAHRS units are supported. A GDU 116C or NC must be installed in the system to support each GSU 75. Each GSU 75 must be connected directly to a GMU 44 magnetometer.

Each GSU 75 is connected to its primary display using two RS-232 connections, in addition to one ARINC 429 connection. A backup ARINC 429 connection can be made to a cross-side GDU 116C or NC. Only ARINC 429 ports on the J1013 connector of a GDU 116C or NC can be used to connect to a GSU 75.

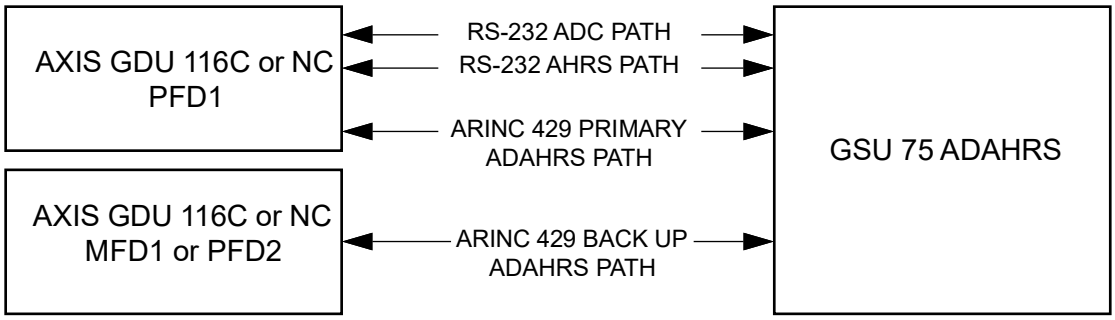

Figure 1-3 PFD/MFD and GSU 75 Block Diagram

1.2.2.3 GSU 73

The GSU 73 does not provide AOA data, but a system that includes a GSU 73 may also include additional GSU 25 units in the #2 and #3 position, to support AOA. The GSU 73 must be directly connected to a GMU 22 or 44(B) magnetometer.

1.2.3 Magnetometer

AXIS flight displays require a minimum of one magnetometer (magnetic field sensor) to provide the ADAHRS unit(s) and G5 standby display(s) with magnetic field information. In an installation with multiple ADAHRS units, magnetometer data from a GMU 11 or GSU 25/73-connected GMU 22/44(B) is shared with any GSU 25 in the system via CAN bus. When multiple ADAHRS units are installed, additional magnetometers may be installed for redundancy, although this is not commonly done.

Several different magnetometers are supported:

- The GMU 11 magnetometer connects to the AXIS flight display system using the CAN bus. Any GSU 25 or G5 on the CAN bus can use magnetic field data from a GMU 11.
- The GMU 44(B)/22 can be used in place of a GMU 11 in a GSU 25 installation. GMU 44(B)/22 connects directly to the #1 GSU 25 via RS-232 and RS-485.
- A GSU 73 must make a connection directly to a GMU 44(B)/22, via RS-232 and RS-485. The GSU 73 does not support the GMU 11.
- A GSU 75 must make a direct connection to a GMU 44 via RS-232 and RS-485. If two GSU 75s are installed, two GMU 44s are required. Data from a GMU 44 connected to a GSU 75, is not available to a GSU 25 in the same system. In this case, a GMU 11 or GMU 44(B)/22 connected directly to the GSU 25 would be required, in addition to the magnetometer requirements of the GSU 75.

NOTE

GMU 44(B) is supported and functionally identical to GMU 22.

1.2.4 Angle of Attack (AOA)

AXIS flight displays are capable of sensing and displaying the aircraft's current AOA when installed with a GSU 25 ADAHRS and a GAP 26 Pitot/AOA probe. The on-screen AOA information also generates AOA audio alerts.

The AOA sensor can be calibrated to compensate for flap position, which requires either a flap position sensor or a dedicated discrete input.

The optional GI 260 AOA indicator can also be added to provide a separate glareshield mounted indication of AOA. The GI 260 communicates with the AXIS flight display system via CAN bus only.

1.2.5 Standby Instruments (G5 and GI 275)

Although there is no regulatory requirement to equip the aircraft with backup flight instruments, Garmin recommends the installation of backup instruments for aircraft that will be flown in other than day VFR conditions. In case of an electrical system failure, or in the unlikely event of an issue with the AXIS flight display system, backup instruments provide a secondary reference for aircraft attitude, airspeed, and altitude.

The G5 and GI 275 displays feature different hardware and software design relative to the GSU 25 to reduce the likelihood of common-mode failures and supports an optional built-in backup battery. The G5 and GI 275 will synchronize data such as baro setting, selected altitude, and heading bugs with the AXIS flight display system. If valid data is unavailable from all dedicated ADAHRS LRUs in the system, the GDUs will automatically display attitude and air data from an installed G5 or GI 275 standby flight displays (SFD).

The G5 communicates with the AXIS Flight Display System via CAN bus. When installed in conjunction with a GMC mode control panel, the G5 is also capable of driving the GSA 28 autopilot servos when power is removed from all GDUs. For further information, refer to the G5 installation/operation manual (P/N 190-02072-00).

The GI 275 communicates with the AXIS Flight Display System via HSDB. Unlike the G5, the GI 275 cannot act as a backup flight director when installed alongside an GFC 500X in the case of primary display failure. The GI 275 can interface with 3rd party autopilots when installed with AXIS displays. For further information on supported autopilots, refer to the GI 275 Installation Manual (P/N 190-02246-00).

A GMU 11 on the CAN bus, or GMU 22/44(B) connected to a GSU 25 or GSU 73, will supply magnetic field data to the G5. GI 275 does not independently calculate heading in an AXIS System but will display heading from another ADAHRS source in the system.

1.2.6 Pitot-Static Connections

The ADAHRS units (and optional G5 or GI 275 displays) in the AXIS flight display system must be connected to the aircraft's Pitot/static system.

The GAP 26 Pitot/AOA probe is a combination Pitot tube and angle of attack (AOA) probe. It is available in several configurations, including heated and unheated versions.

The heated version of the GAP 26 (P/N 010-01074-10) has dual internal electro-thermal heating elements to provide ice protection to the areas of the probe where surface impingement of icing elements is expected to occur.

In addition to the same level of ice protection, the heated/regulated version of the GAP 26 (P/N 010-01074-20) limits the maximum tip temperature to make the probe safer if powered on the ground and to provide a discrete output that indicates when the heater is powered and providing sufficient heat.

AXIS flight displays ADAHRS units and G5 and GI 275 displays may also be used with any other Pitot tube, if AOA is not required.

1.2.7 Engine Indication System (EIS)

AXIS flight displays include highly flexible capabilities for monitoring numerous engine sensors and parameters, and can support most piston and turbine engines, including twin-engine installations. Airframe sensors such as voltage, fuel quantity, and discrete (switch/contact) inputs are also supported.

The GEA 24, GSU 73 and GEA 110 can drive external annunciator lamps for Master Caution and Master Warning, to provide additional notification of abnormal engine indications.

1.2.7.1 GEA 24

The primary EIS unit for AXIS flight displays is the GEA 24 engine interface module. The GEA 24 provides the ability to monitor numerous analog, digital, and discrete signals from a variety of engine and airframe sensors. Two GEA 24 units may be installed in order to monitor piston engines with more than six cylinders, or for twin-engine applications. The GEA 24 also supports a digital interface to a number of FADEC engines.

The GEA 24 communicates with other LRUs using the CAN bus, and can optionally be connected to any RS-232 port in the system as a backup data path (recommended).

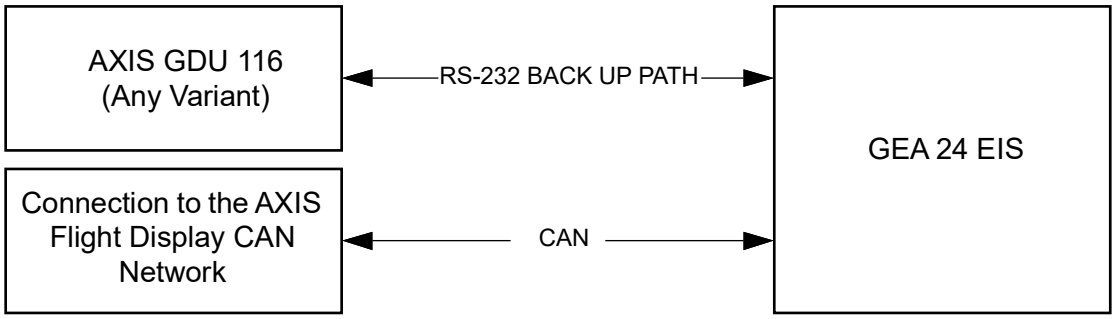

Figure 1-4 GDU 116( ) and GEA 24 Block Diagram

1.2.7.2 GSU 73

The GSU 73 also supports many of the same EIS inputs. A system that includes a GSU 73 may instead use a GEA 24 for EIS, if the GEA 24 is wired as EIS LRU #2.

The GSU 73 communicates with the system via CAN bus and does not support a redundant backup path.

1.2.7.3 GEA 110

The GEA 110 can also be used as the EIS interface in AXIS flight displays. These units can be mounted safely on the engine side of the firewall. For this reason, individual engine sensor wires do not have be run from the engine, through the firewall or from the wing, to the instrument panel area.

The GEA 110 communicates with the system via RS-485. Only GDU 116C and NC have RS-485 ports available, so at least 1 GDU of this variant is required.

A second RS-485 connection can be made from the unit to a second display as a redundant backup path. This would necessitate a second GDU 116C or NC display variant be installed.

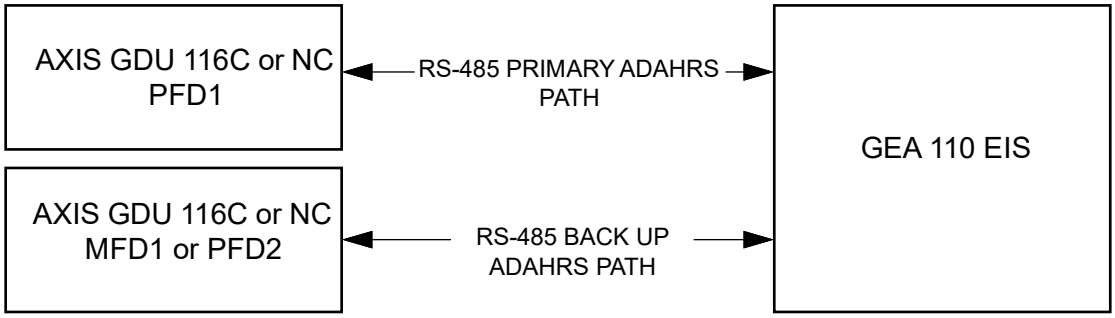

Figure 1-5 GDU 116( ) and GEA 110 Block Diagram

1.2.8 ARINC 429

ARINC 429 is an industry-standard data bus format that is primarily used to communicate with IFR GPS or IFR combination GPS/NAV receivers. ARINC 429 data received in the AXIS system by a GAD 29 or GSU 73 is made available to any AXIS display in the system, in addition to any G5 standby flight displays.

The GAD 29 cannot be installed in systems that include a GSU 73.

Both the GSU 73 and GAD 29 communicate with AXIS flight displays via CAN bus. ARINC 429 data is distributed to the rest of the system in this manner.

GDU 116 COM and NAV/COM display variants include built in ARINC 429 in/out ports. In this case, a GAD 29 or GSU 73 is not required to interface with external navigators that require ARINC 429 connections with the AXIS displays in the system. However, a G5 in the system is not capable of receiving ARINC 429 data provided directly to an AXIS display. To share external navigator ARINC 429 data with both the AXIS display system and a connected G5, a GAD 29 or GSU 73 must be used.

1.2.9 Navigation Receiver

NOTE

The AXIS flight display can be used as the sole display of CDI information, and an existing standalone CDI may be removed from aircraft. Lateral and vertical navigation guidance is displayed on the PFD. On-screen controls allow switching the current source of navigation data between multiple sources.

AXIS flight displays support a maximum of two IFR GPS and two VHF navigation sources. This includes any combination of internal or external IFR navigation sources. In addition to two IFR GPS sources, additional VFR GPS sources may be configured in a system and used for GPS navigation in VMC. Additional sources of VFR GPS data include GDU 116Bx, G5, GI 275, or GTX 345(R) with GPS. An externally mounted antenna is required for each IFR GPS source and VHF NAV source in the aircraft.

AXIS flight displays utilize internal GPS from GDU 116 variants in addition to external GPS navigators for GPS navigation. GDU 116Bx is suitable for VFR navigation when installed without a IFR navigator. GDU 116C and GDU 116NC are TSO-C146e authorized navigators suitable for IFR GPS navigation. The GDU 116NC is also TSO-C34e, TSO-C36e, and TSO-C40c authorized to support VFH navigation.

There are two primary methods of connecting external navigation sources to the AXIS flight display system, HSDB or serial (RS-232/ARINC 429). Connection method depends on the capability of the interfacing equipment.

1.2.9.1 HSDB Navigator

NOTE

For navigation information from these units to be made available on the G5, ARINC 429 data from each external GPS or VHF NAV source in the system must be provided via GAD 29 or GSU 73.

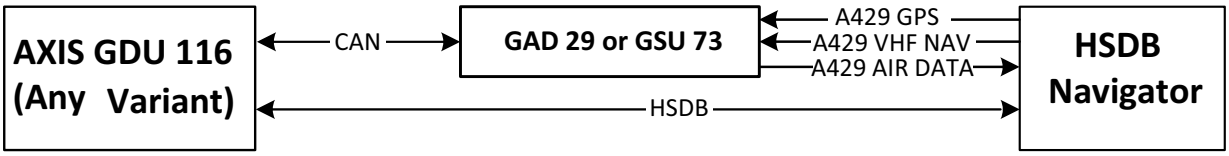

Figure 1-6 GDU 116( ) and HSDB Navigator Block Diagram

1.2.9.1.1 GPS, GPS/COM, and GPS/NAV/COM Navigators

The GPS 175, GNC 355, GNX 375 and GTN Xi Series navigators communicate with the AXIS flight display system via HSDB. The flight plan for these navigators is synced with the flight plan of the AXIS displays and any other HSDB navigator in the system. All flight plan operations for these units can be accomplished through the AXIS flight display's flight plan or the navigator's native flight plan. Additionally, radio and transponder functions are available from the AXIS flight display system.

1.2.9.1.2 VHF Navigator

The GNC 215 communicates with the AXIS flight display system via HSDB and supports full control of the radio's functions.

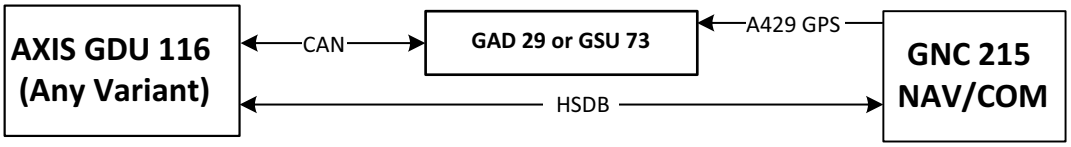

Figure 1-7 GDU 116( ) and GNC 215 NAV/COM Block Diagram

1.2.9.2 Serial Navigators

NOTE

Any ARINC input in the system may be used for Serial Navigators, including ARINC 429 inputs on an AXIS GDU 116C or 116NC. However, for GPS and NAV navigation information to be made available on the G5, ARINC 429 data from each external GPS or VHF NAV source in the system must be provided to the system via GAD 29 or GSU 73.

NOTE

Backup RS-232 and ARINC 429 connections can be made between GI 275 and any serial navigator. Refer to the GI 275 Installation Manual (P/N 190-02246-00).

1.2.9.2.1 GTN 6XX/7XX Series Navigators

GPS navigation data from GTN 6XX/7XX Series navigators is provided to the AXIS flight display system via one RS-232 input and one ARINC 429 input for each GTN unit. AXIS flight displays send flight data and selected course information back to the external navigator via ARINC 429.

VHF navigation data from VHF NAV capable GTN 6XX/7XX series navigators is provided to the AXIS flight display system via an additional ARINC 429 connection. This data includes VOR, Localizer, and Glideslope deviations.

GTN 6XX/7XX series must not be connected via HSDB to any component which is also connected via HSDB to the AXIS system, including GTN Xi Series Navigator, GNX 375, GNC 355 or GPS 175, GI 275, GTX 45, or GTX 345. Two exceptions exist for this rule:

- A GTN 6XX/7XX series navigator can be connected to a GTX transponder via HSDB, but the transponder must not be connected to the AXIS system via HSDB. In this case, the GTX must use the serial connection method to interface with the AXIS system, as described in section 1.2.13.
- If dual GTN 6XX/7XX navigators exist in a system, they may be connected to each via HSDB, with no further HSDB connection made to the rest of the system.

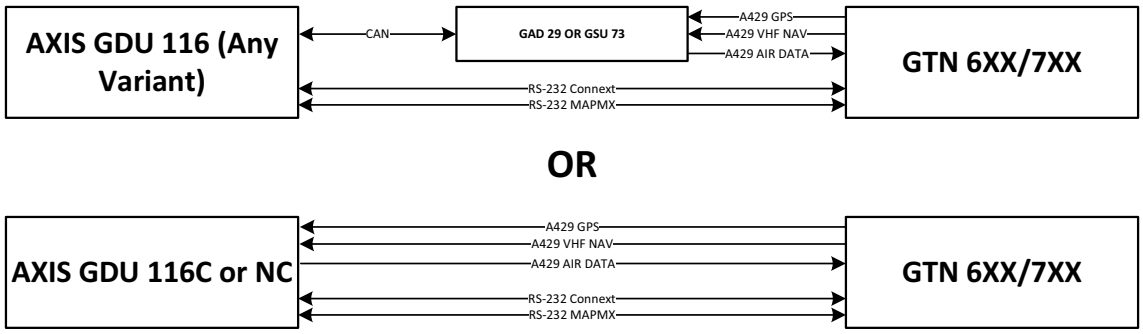

Figure 1-8 GDU 116( ) and GTN 6XX/7XX Block Diagram

1.2.9.2.2 GNS Series Navigators

GPS navigation data from GNS WAAS navigators is provided to the AXIS flight display system via one RS-232 input and one ARINC 429 input for each GTN or GNS unit. AXIS flight displays send flight data and selected course information back to the external navigator via ARINC 429.

VHF navigation data from VHF NAV capable GNS series navigators is provided to the AXIS flight display system via an additional ARINC 429 connection. This data includes VOR, localizer, and glideslope deviations.

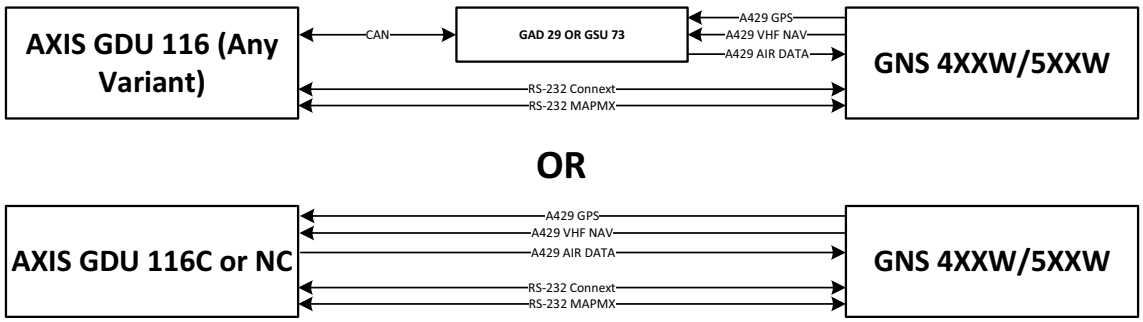

Figure 1-9 GDU 116( ) and GNS Series Navigators Block Diagram

1.2.9.2.3 Serial Navigator Flight Plan Crossfill Considerations

AXIS flight displays can send basic flight plan data directly to a GNS or GTN 6XX/7XX navigator. However, flight plan transfer capability requires a second RS-232 connection between an AXIS flight display and the GNS or GTN 6XX/7XX navigator.

Crossfill between the external navigators is subject to the following:

- GTN 6XX/7XX navigators support crossfill with GTN 6XX/7XX via HSDB.
- GTN 6XX/7XX navigators support crossfill with GNS series navigators via RS-232.
- GTN Xi series navigators support crossfill with GNS series navigators via RS-232.
- GNS navigators support crossfill with other GNS navigators via RS-232.
- No crossfill is supported between GTN Xi series and GTN 6XX/7XX.
- No crossfill is supported between GTN 6XX/7XX and GNX 375, GNC 355, or GPS 175.
- No crossfill is supported between GNS and GNX 375, GNC 355, or GPS175.

Recommendations:

When installing a GTN Xi series navigator and a GNS navigator, it is recommended that crossfill be enabled between the GTN Xi and the GNS navigator instead of using the AXIS Display's RS-232 crossfill to the GNS.

When installing dual serial GPS navigators, it is recommended that crossfill be enabled between AXIS GDU and GPS1 as well as between GPS1 and GPS2.

When installing an HSDB GPS navigator and a GTN 6XX/7XX, crossfill is only supported between the AXIS GDU and the GTN 6XX/7XX navigator.

1.2.9.2.4 GNC 255 and SL30

VHF navigation information from a GNC 255 or SL30 VHF NAV receiver is supported via an RS-232 connection to a GDU 116. An ARINC 429 input from the GNC 255 can be optionally connected to increase system redundancy.

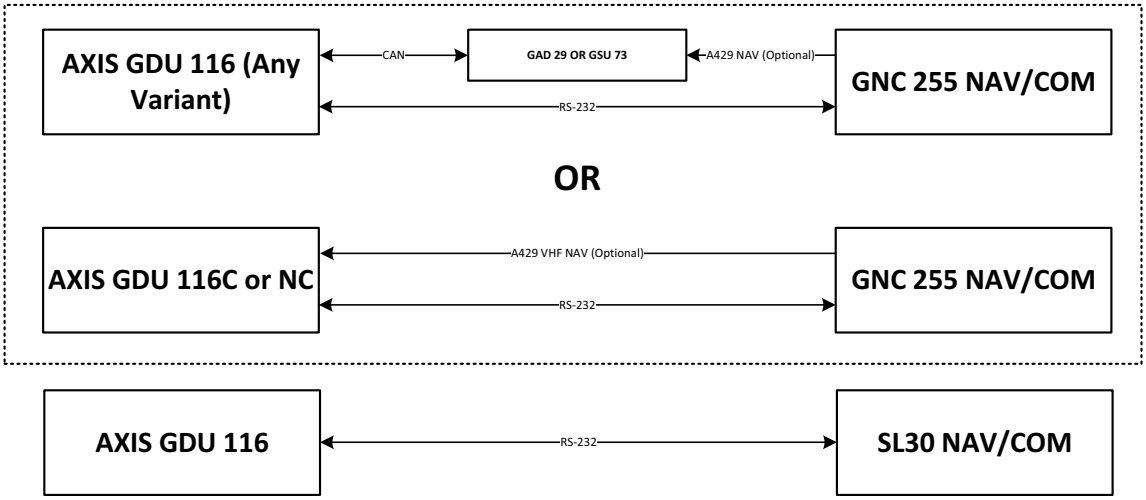

Figure 1-10 GDU 116( ) and NAV/COM Block Diagram

1.2.9.2.5 GNC 215

VHF navigation information from a GNC 215 VHF NAV receiver is optionally supported via an RS-232 connection to a GDU 116. An ARINC 429 input from the GNC 215 can additionally be connected to increase system redundancy. The HSDB datapath method described in the previous section is the recommended installation type.

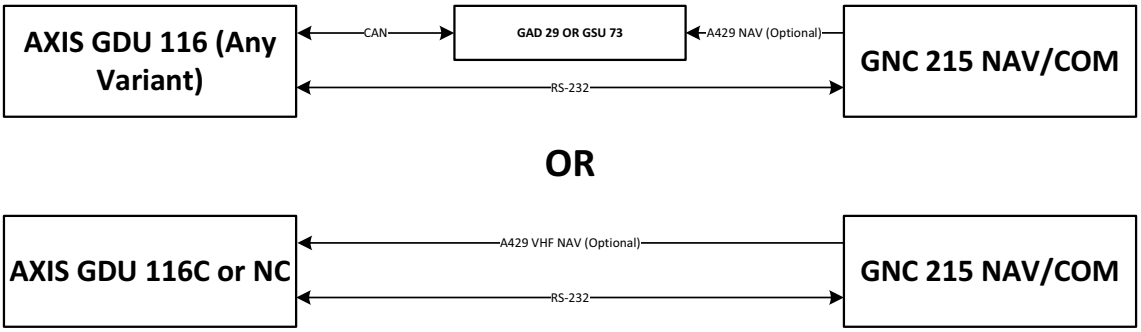

Figure 1-11 GDU 116( ) and GNC 215 Block Diagram

1.2.9.3 Serial Navigator

GPS navigation data from GTN 6XX/7XX Series navigators and GNS WAAS navigators is provided to the AXIS flight display system via one RS-232 input and one ARINC 429 input for each GTN or GNS unit. AXIS flight displays send flight data and selected course information back to the external GPS navigator via ARINC 429.

AXIS flight displays use an additional ARINC 429 connection from the GTN 6XX/7XX and GNS series navigators to receive VOR, localizer, and glideslope deviation information from select units with VHF NAV capability.

NOTE

For navigation information to be available on the G5, ARINC 429 data from each external GPS or VHF NAV source in the system must be provided via GAD 29 or GSU 73.

AXIS flight displays can send basic flight plan data to a GTN or GNS WAAS Series navigator; however, flight plan transfer capability requires a second RS-232 connection between an AXIS flight display and the GTN or GNS navigator.

VHF navigation information from a GNC 255 or SL30 VHF NAV receiver is supported via an RS-232 connection to a GDU 116. An ARINC 429 input from the GNC 255 can be optionally connected to increase system redundancy.

VHF navigation information from a GNC 215 VHF NAV receiver is supported via an RS-232 connection to a GDU 116. An ARINC 429 input from the GNC 215 can be optionally connected to increase system redundancy. The HSDB data path method described in the previous section is recommended however.

1.2.10 COM Radios

AXIS flight displays are capable of controlling up to two VHF COM radios.

COM and NAV/COM AXIS GDUs include a built-in 10W VHF COM radio. All radio operation is performed through the AXIS user interface. Each COM radio in the system requires a VHF antenna mounted external to the aircraft.

Supported External COM radios include:

- GNC 215
- GNC 255
- GNC 355
- GTN 635/650/750 (Xi)
- GTR 20
- GTR 200/200B
- GTR 205
- GTR 205x
- GTR 205R(x)
- GTR 225
- SL30
- SL40

GTR 20 and GTR 205R(x) are remote-mounted COM radios that are entirely controlled by AXIS flight displays, with no dedicated panel mount controls. GTR 205R(x) communicates with the AXIS flight display system via HSDB, however existing CAN interfaces are supported. HSDB facilitates greater system integration.

GTR 205x communicates with the AXIS flight display system via HSDB, however existing CAN or RS-232 connections are supported. HSDB facilitates greater system integration.

GTR 20, GTR 200B, and GTR 200 communicate with the AXIS flight display system via CAN bus only.

The SL40 and GTR 225 communicate with the AXIS flight display system via RS-232 only.

The GNC 215, GNC 355, GTN Series navigators, GTN Xi Series navigators, SL30 and GNC 255 communicate with the AXIS flight display through the same connection used for Navigation purposes.

1.2.11 NAV Radios

AXIS flight displays are capable of displaying and controlling up to two VHF NAV radios.

NAV/COM AXIS GDUs include a built-in VHF NAV receiver, capable of VOR and ILS operations. All radio operation is performed through the AXIS user interface, with no dedicated panel mounted controls.

Supported external VHF NAV radios include the following:

- GNC 215 NAV/COM
- GNC 255 NAV/COM
- GNS WAAS series navigators [1]
- GTN series navigators
- GTN Xi series navigators
- SL30

[1] AXIS is not able to remote control the frequency of GNS Series Navigators.

1.2.12 Autopilot

1.2.12.1 GFC 500X

The GFC 500X is an advanced digital flight director and autopilot based around the GSA 28 smart autopilot servo, that can control up to 3 axes of an aircraft, and 3 axes of trim control, including auto-trim. The GFC500X is intended to be installed in a wide variety of fixed-wing aircraft, including light sport and home-built aircraft. Servo installation kits are available for many common airframes, as well as guidance for using generic airframe servo mounts.

The GSA 28 servos also support enhanced stability and protection features which increase safety when hand-flying.

The GSA 28 servo features an advanced brushless DC motor and gearbox, with an engagement clutch to allow for very low-friction operation of the aircraft flight controls with clutch disengaged. The GSA 28 performs continuous internal monitoring and fault detection, and can also safely be back-driven by the pilot in the event of an engagement clutch fault condition. An advanced electronic slip clutch provides the ability for the pilot to overpower the servo at a configurable torque threshold without requiring use of a consumable shear pin or additional moving parts.

The function of the GSA 28 is to drive a flight-control axis (pitch, roll) of the aircraft. The servo can also be installed in the rudder control system to provide yaw damping. All of the following configurations can be used with or without auto-trim in each axis:

- Roll autopilot only
- Pitch/roll autopilot
- Pitch/roll autopilot with yaw damper

A GSU 25 is required to support GFC500X. A GSU 75 can be installed in the ADAHRS 2 position if desired. The optional GMC 507 mode control panel provides a convenient set of controls for the GFC 500X autopilot and flight director. In addition, the GMC 507 includes a built in AHRS unit that monitors critical flight parameters, and disengages the autopilot in the case of a disagreement (if configured).

Under normal conditions, the GSA 28 servo operates based on flight director commands from the AXIS flight displays. When used with the GMC 507 Mode Controller, the GSA 28 maintains a reversionary capability to engage and fly the aircraft in basic wings-level and altitude-hold modes even if all GDUs in the aircraft are unavailable. Up to two GMC 507s can be installed in a GFC 500X installation.

NOTE

AXIS flight display systems are also backwards compatible with GMC 305 and GMC 307 autopilot mode controllers and wiring architecture.

All GSA 28 servos in addition to the optional GMC 507 Mode controller communicate primarily via CAN bus. The following four subsections (roll, pitch, yaw, and trim) are provided to aid the pilot/installer in selecting the appropriate GFC500X autopilot system components:

Roll Servo

All GSA 28 autopilot systems require a servo to control the roll axis of an aircraft. A single axis GSA 28 installation that controls only the roll axis is sometimes referred to as a “wing-leveler.”

The roll servo follows roll steering commands from the AXIS flight display system so the airplane will hold a desired roll angle, follow a desired heading, or follow the lateral component of a flight plan.

Pitch Servo

Most GSA 28 autopilot systems consist of both a roll and pitch servo allowing for full two-axis control of the aircraft.

The pitch servo follows vertical guidance commands from the AXIS flight display system so the airplane will hold a desired pitch angle, vertical speed, airspeed, or altitude, and also follow the vertical component of a flight plan.

Yaw Damper

The GSA 28 autopilot system can be expanded to support a yaw damper. A yaw damper will control the rudder to try and compensate or remove aircraft body yaw (tail wagging). The yaw damper will also try to null the lateral acceleration (center the ball) over the long term. The ball centering portion of the yaw damper is not a replacement for proper rudder trim.

Trim Control

The GSA 28 autopilot servos can be used to control the trim system in an aircraft, by driving an external third-party DC trim motor dedicated to moving trim for each axis. This allows for both auto-trim and speed scheduled trim capability.

The GSA 28 supports a single trim switch input only. For use with multiple trim switches (e.g., pilot and co-pilot), a GAD 27 or other third-party device capable of mixing multiple trim switches into one output to the GSA 28 can be used.

When using an external DC trim motor, the GSA 28 is wired in between the trim switches and the DC Trim motor. Trim switch commands are then passed through the GSA 28 to the trim motor, using a variable voltage output signal from pins 13 and 14 of the GSA 28 servo(s).

NOTE

The GSA 28 trim outputs are capable of sourcing a maximum of 1A of current to drive a DC trim motor at 12 V, or a maximum of 550 mA of current to drive a DC trim motor at 24V. If more than 1 A of current is required for a given trim motor, a third party device can be used in line with the trim motor and GSA 28. Reference figure B-5.3 for more information.

When the autopilot is disengaged, the servos provide manual electric trim functionality (MET), by running the trim motor in response to pilot input. The system can adjust the trim speed based on the current aircraft airspeed (Speed Scheduled Trim). This allows the trim to run slower at high airspeeds and faster at low airspeeds. When the autopilot is engaged in the air, the servos can adjust the trim control to minimize the force on the primary controls (Auto-Trim). This helps make sure the aircraft will be properly trimmed when the autopilot is later disengaged.

In the event that power to the GSA 28 is removed, a failsafe system connects the trim input switch directly to the trim motor. In this condition, the trim switch powers the trim motor directly and the motor runs at its full speed when the switch is pressed, bypassing any influence of the servo over the pilot commanded trim inputs. The same condition also occurs if a trim switch and motor are connected to the GSA 28, but the trim control function is disabled.

Alternatively, an additional dedicated GSA 28 trim servo can be used for each trim axis, although this is not common in EAB aircraft. This means up to five GSA 28 servos can be installed (Pitch, Roll, Yaw, Pitch Trim and Yaw Trim), however a total of three are typically installed (Pitch, Roll, Trim), opting for DC Trim motors as the trim actuator.

1.2.12.2 Third-Party Autopilots

Third-party autopilots are supported via GI 275 in the AXIS system. If flight director is supported in GI 275 for an autopilot of this type, the flight director will also be shown on the AXIS display.

1.2.13 Transponders

NOTE

When interfacing a GTX 335( )/345( )/45R to AXIS flight displays, a configuration module should not be installed in the GTX 3X5( )/45R.

AXIS flight displays can interface to the Garmin transponders listed in Appendix C.9. The transponder code, operating mode, and flight ID can be displayed and remotely controlled through the GDU 116 displays. AXIS flight display ADAHRS LRUs provide pressure altitude data to interfaced transponders, through the same path used for remote control.

Transponder(s) require an externally-mounted aircraft antenna to send and receive data to the ground and other aircraft.

Remote-mounted transponders such as the GTX 32/33(ES), GTX 335(D)R/345(D)R, GTX 35R, and GTX 45R lack front-panel controls and can only be controlled through the AXIS flight display.

The GTX 33ES/330ES/335( ), GTX 35R/45R, GTX 345( ), and GNX 375 are Mode S transponders with extended squitter capability. When provided with a GPS position source that meets the TSO performance requirements specified in 14 CFR 91.227, these transponders are an acceptable method of complying with the requirements for ADS-B Out. Compliant GPS position sources include:

- GDU 116C
- GDU 116NC
- GPS 175
- GNC 355(A)
- GNX 375
- GNS WAAS series navigators
- GTN series navigators
- GTN Xi series navigators
- GPS models of the GTX 335( )/45R/345( )
- GPS 20A

NOTE

The GDU 116B VFR GPS receiver does not meet the TSO GPS requirements for ADS-B Out compliance.

Some transponders support ADS-B weather and traffic. Refer to section 1.2.14 for information on weather and traffic interface capabilities.

There are various means to connect supported transponders to the AXIS flight display system, as described in the following sections.

1.2.13.1 GNX 375

GNX 375 only communicates with the AXIS flight display system via HSDB to support transponder functions.

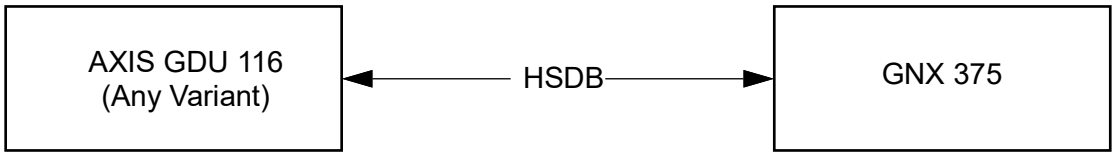

Figure 1-12 AXIS and GNX 375 Block Diagram

1.2.13.2 GTX 345(D)(R) and GTX 45R Transponder Interface

GTX 345(D)(R) and GTX 45R communicate with the AXIS flight display system for remote control via HSDB, which also provides ADS-B Out compliant GPS to the transponder, if a GTN Xi Series, GPS 175, GNC 355, GDU 116C, or 116NC exists in the system. This same connection also allows ADS-B In traffic and weather data to be provided to all AXIS flight displays in the system.

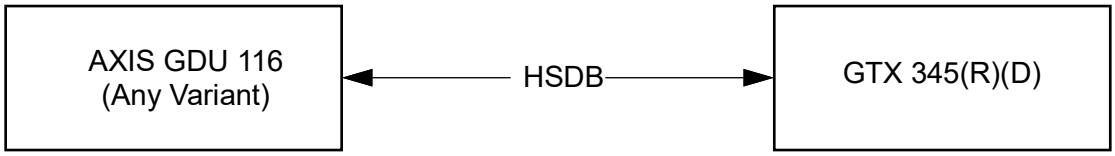

Figure 1-13 AXIS and GTX 345(R)(D) Block Diagram

NOTE

HSDB installation for GTX 45R is not supported. Use the serial connection method described below. HSDB wiring can be provisioned for later use.

As an alternative, AXIS is also backwards compatible with the RS-232 connections between these transponders and GSU 25, and GDU, that were used in G3X Touch installations. HSDB is not required in these installations but is recommended. The RS-232 connection to the GSU 25 can provide ADS-B Out compliant GPS to the transponder, if a GTN Xi Series, GPS 175, GNC 355, GDU 116C, or 116NC exists in the system.

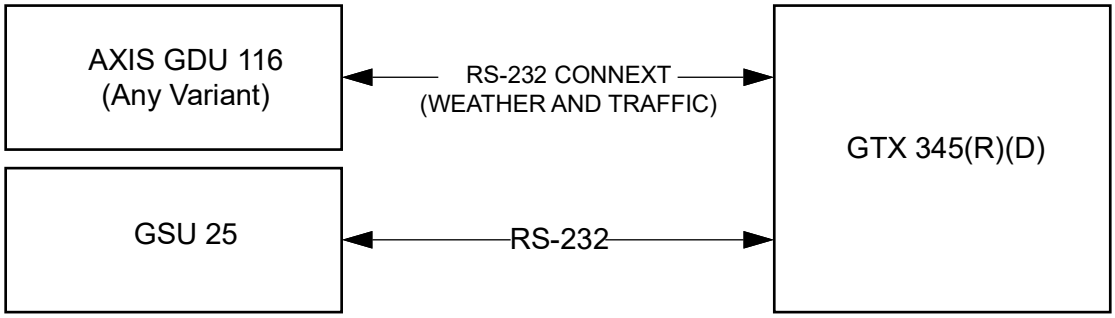

Figure 1-14 AXIS, GSU 25, and GTX 345(R)(D) Block Diagram

If a GTX 345(D)(R) transponder was connected to a GTN 6XX/7XX via HSDB in a previous installation, this connection can remain to provide weather and traffic to the GTN and GPS position to the transponder. However, neither unit can be connected to the HSDB network of the rest of the AXIS system. In these installations retain the serial connection to the GSU 25 and GDU 116( ).

NOTE

If a GSU 75 is installed and no GSU 25 exists in the system, the AXIS flight display system can provide transponder control for GTX 345( ) only when interfaced via HSDB.

1.2.13.3 Other Transponder Interfaces

GTX 325, 327, GTX 328, GTX 330(ES), GTX 23/23ES/32/33/33ES, GTX 325, and GTX 335(R)(D) communicate with the AXIS flight display via RS-232 connection to the GSU 25 only. For ADS-B Out enabled models, ADS-B compliant GPS is provided to the transponder using this data path, if a GDU 116C or 116NC exists in the system.

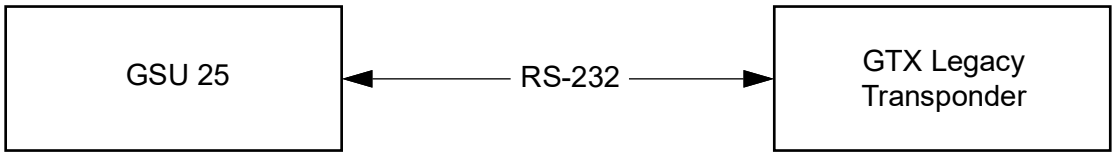

Figure 1-15 GSU 25 and Transponder Block Diagram

1.2.14 Weather and Traffic

AXIS flight displays support a variety of airborne traffic and weather data sources.

NOTE

If an external traffic warning system is installed on the aircraft, the external traffic warning system must be configured to disable traffic aural alerts to prevent redundant or conflicting alerts. This may also be accomplished by disconnecting the aural alerting interface to the audio panel from an external traffic system.

1.2.14.1 ADS-B In

AXIS flight displays support the display of FIS-B weather and dual frequency ADS-B traffic data. Supported ADS-B LRUs include the GTX 45R/345/345R/345DR transponder, GNX 375, GDL 50(R), or GDL 52(R).

GNX 375 transponders provide ADS-B traffic and weather data to the AXIS flight display using the same HSDB path used for remote control.

HSDB connected GTX 345(R)(D) and 45R transponders provide ADS-B traffic and weather data to the AXIS flight display using HSDB. If the alternative RS-232 connection path is used, a dedicated RS-232 path to at least one GDU in the system is used to provide ADS-B data. Only one dedicated RS-232 connection for ADS-B is required per system, in contrast to G3X Touch, in which every display required a connection to the ADS-B source for weather data.

GTX 345 can provide correlated ADS-B and TCAS traffic from connected GTS 8XX or third-party traffic systems. AXIS flight display provides all aural traffic alerts for ADS-B and TCAS targets provided by the GTX 345.

GDL 5X units communicate with the AXIS flight display system using an RS-232 connection or wirelessly to portable electronic devices via Bluetooth. If RS-232 is used, only one connection to one display in the system is required, as traffic and weather data are shared between GDUs.

GDL 5XR units require an externally mounted antenna to receive ADS-B data from the ground and other aircraft.

1.2.14.2 Active Traffic Systems

The GTS 8XX active traffic system is compatible with AXIS flight displays, providing ADS-B traffic data in addition to TAS or TCAS I functionality. The GTS interface to AXIS flight displays require an HSDB connection to a GTX. GNX 375 cannot exist in the same system as GTS active traffic receiver.

The AXIS flight display will provide all aural traffic alerts for GTS 8XX provided traffic. Third-party traffic systems are only supported through the GTX 345.

1.2.15 System Audio

The AXIS flight display generates a wide range of audio alerts, including terrain alerts, traffic alerts, autopilot related alerts, and many more. In an AXIS flight display system, the GDU is generally the primary alert audio source. The audio outputs from the GDU must be connected to an intercom or audio panel, to distribute audio to crew and passengers in the cockpit. If the AXIS GDU is installed to provide traffic and/or terrain audio alerts, audio interfaces from other devices performing the same functions can be removed.

Each AXIS GDU includes a mono audio output. In systems with more than one GDU, the audio output from each display can be connected to the intercom or audio panel to provide system alert redundancy in the case of a primary display failure.

Sirius XM Receivers (like GDL 51(R), and 52(R)) can provide Sirius XM based music to the aircraft. The stereo output of the GDL LRU can be connected to the input of the aircraft audio panel or intercom system, to distribute music throughout the aircraft.

1.2.16 Audio Panel

In an AXIS flight display system, multiple audio panel and/or intercom system (ICS) options are available. An ICS allows for communication between occupants in the cockpit, and supports various audio inputs, like alert audio, music inputs, and a single COM radio. Dedicated intercom systems are generally limited to two intercom positions, pilot and co-pilot.

Garmin audio panels include intercom functionality but also have the ability to switch between multiple COM and NAV radios, and typically include four or more intercom positions, pilot, co-pilot and passengers. An audio panel is generally required to support multiple COM radio installations, and aircraft with more than two passengers/crew.

1.2.16.1 Dedicated Intercoms

The GTR 20, GTR 200(B), GTR 205x, and GTR 205R(x) COM radios contain a built-in two-place intercom with alert audio and stereo music inputs. For simple two-place VFR aircraft with only a single COM radio, the GTR 20, GTR 200, GTR 205x, or GTR 205R(x) can provide all audio functionality, with no separate audio panel required. Remote models are controlled through the AXIS user interface only, with no dedicated panel mount controls.

NOTE

Disable the internal intercom on connected GTR 205(R) or GTR 200/20 radios when a dedicated audio panel is installed. For panel-mounted GTR radios, disable it via the radio's configuration mode.

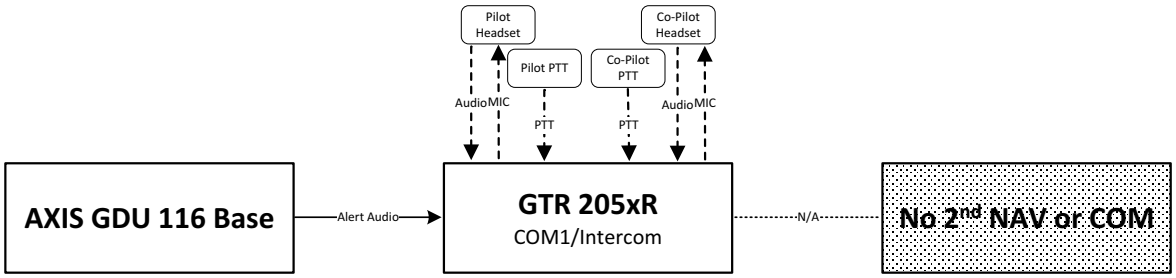

Figure 1-16 GTR Intercom Only Installation

1.2.16.2 Audio Panels

GDU 116C and GDU 116NC units include a built-in audio panel with four-place intercom. This audio panel facilitates switching between the COM radio built in the display, and an external COM radio. Support for switching between an internal VHF NAV radio and an external VHF NAV radio is also available. GDU alert audio is internally routed and available to the crew. Additionally, a stereo music input and an external alert input is available.

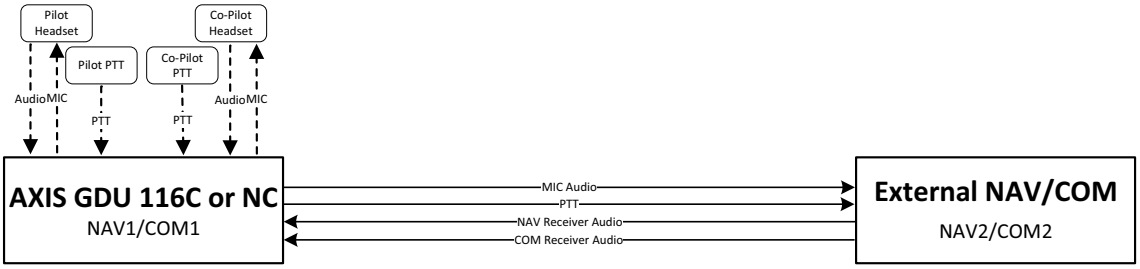

Figure 1-17 AXIS Flight Display as the Audio Panel Device

The GMA 245 is a panel-mounted digital audio panel with 6-place intercom system and Bluetooth input.

The GMA 245R has the same capabilities as the GMA 245, but is remote-mounted and is controlled only through the AXIS user interface, with no dedicated panel mounted controls. It communicates with the AXIS flight display via CAN bus. For further information, refer to the *GMA 245 Pilot's Guide* (P/N 190-01879-10) and *GMA 245/245R Installation Manual* (P/N 190-01879-11).

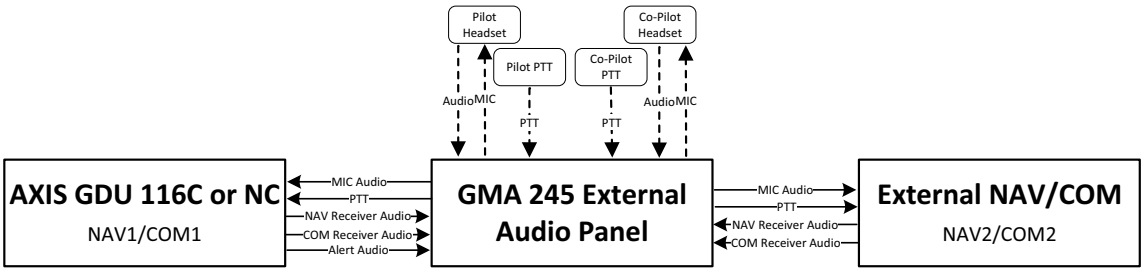

Figure 1-18 External Audio Panel Device

GMA 342 and GMA 345 are minimally integrated with the AXIS flight display, providing a GDU indication of the MIC selected COM, and marker beacon. These audio panels interface with the AXIS system using a single RS-232 connection.

1.2.17 Electrical System

AXIS flight displays support a variety of connections to the aircraft's electrical system. Most important LRUs support dual power inputs, allowing them to be powered from separate dual electrical buses. Alternatively, one of the power inputs may be connected to a backup battery to provide adequate electrical power supply in the event of alternator failure, or during engine start. Backup batteries designed for AXIS flight displays are available from third-party suppliers, or a backup battery can be integrated into the aircrafts electrical system design in order to power additional devices.

In AXIS flight displays, the GAD 27 electrical control system provides low-voltage protection during engine start, as well as control of the flaps, trim, external lighting, and cockpit lighting.

NOTE

GAD 27 flap controls cannot be used in systems that include GEA 110 EIS units.

If the aircraft is equipped with a cockpit light dimming system, the AXIS flight displays and various other Garmin panel-mount avionics support connection to the dimming bus to control display brightness.

AXIS flight displays are compatible with vertical power products through an RS-232 connection to a GDU. For further information on interfacing vertical power products to the AXIS flight display system, consult the manufacturer.

1.2.17.1 Aircraft Batteries

AXIS supports integration with EarthX and True Blue aircraft batteries. An RS-232 connection to the battery provides AXIS with information about the battery as follows:

True Blue

- Battery current
- Battery voltage
- Cell temperature
- Health status
- Operational status
- State of charge
- State of health

EarthX

- Battery Voltage
- Cell Temperature
- State of Charge
- Health Status
- Operational Status

1.2.18 Video

Each AXIS flight display has a rear connector which supports HDMI video. Video input to an AXIS flight display can be used with various cameras or entertainment systems, with the video image displayed on a dedicated MFD page, or in an inset window on the AXIS PFW.

1.2.19 Bluetooth

AXIS flight displays include Bluetooth transceivers. This allows a wireless connection to a tablet using Garmin Pilot app or another application that supports the Garmin Connext protocol.

The following information is provided to Portable Electronic Devices (PED) via Bluetooth, if available:

- GPS PVT
- ADAHRS Data
  - Magnetic Heading
  - True Heading
  - True Airspeed
  - Vertical Rate
  - Pressure Altitude
  - Wind Data
  - Outside Air Temperature (OAT)
  - Total Air Temperature (TAT)
  - Density Altitude
  - Attitude
  - Indicated Airspeed
  - Radio AGL
- Flight Plan Transfer
- ADS-B Traffic
- FIS-B Weather
- Database Concierge Database Management
- Flight Data Logs
- GCO 14 Carbon Monoxide Detector data
- System Information

COM or NAV/COM Display units with Audio Panel function enabled:

- Bluetooth audio and controls
- Bluetooth phone calls

1.2.20 WiFi

Database Concierge allows wireless transfer of databases from a PED while the aircraft is on ground. Transfers occur once the Garmin Connext device establishes a wireless connection inside the aircraft.

1.2.21 Smart Glide Engine Out Assistance

Smart Glide is designed to assist the pilot by enhancing situational awareness and providing helpful automation during an emergency inoperative engine event. AXIS flight displays are capable of providing this assistance internally, without the need for an external navigator. Upon activation, Smart Glide assists the pilot with three critical components of a safe recovery from an engine failure:

- If equipped with a compatible autopilot, provides flight director guidance to pitch for and hold best glide airspeed
- Identifies and provides navigation guidance, as well as optional flight director guidance to a suitable landing location (if one is available)
- Provides quick access to relevant communication channels and emergency checklists

When GSA 28 smart autopilot servos or other compatible autopilot is installed, the autopilot automatically couples to the flight director guidance provided by Smart Glide, if sufficient altitude is available. An optional discrete input can be programmed to provide a dedicated external panel mounted switch for glide activation (Garmin P/N 011-05930-00).

1.2.22 Radio AGL

Knowing precise height above the ground is helpful to pilots during landings and flying in areas where limited barometric altimeter setting information is available.

The GHA 15 uses radar technology to provide height above ground level (RAGL) information for AXIS flight displays. GHA 15 AGL data is available up to 500 feet AGL. Audible alerts based on radio AGL or radar altitude can be configured beginning at 300 feet AGL, and at select intervals down to 1 foot AGL.

The GHA 15 unit communicates with the system via CAN bus.

The GHA 15 cannot be interfaced to the AXIS flight display system if TAWS-B is enabled.

1.2.23 CO Detector

The GCO 14 carbon monoxide detector can be installed with AXIS flight displays. Alerts display on the PFD display for excessive carbon monoxide levels, and the current CO level can be displayed in a data field. Additionally, a user alert can be set to set custom CO alert parameters.

A CO Guardian or other compatible carbon monoxide detector can be connected to a GDU using RS-232, and its data relayed to other displays across the CAN bus. CO detectors with pulse oximeter functions are also supported. For installation information, consult the CO detector manufacturer.

1.2.24 ELT

AXIS flight displays can provide NMEA 0183 and Aviation Out formatted GPS position data to an ELT through an RS-232 output from a GDU. For further ELT interface guidance, consult the ELT manufacturer.

1.3 System Architecture Examples

1.3.1 CAN Architecture

The CAN bus is a linear chain encompassing each CAN LRU in the system. Each AXIS display must be connected via CAN, in addition to HSDB. Some LRUs support more than 1 connection type, as described in the preceding sections. If an alternate path is selected, CAN is not required.

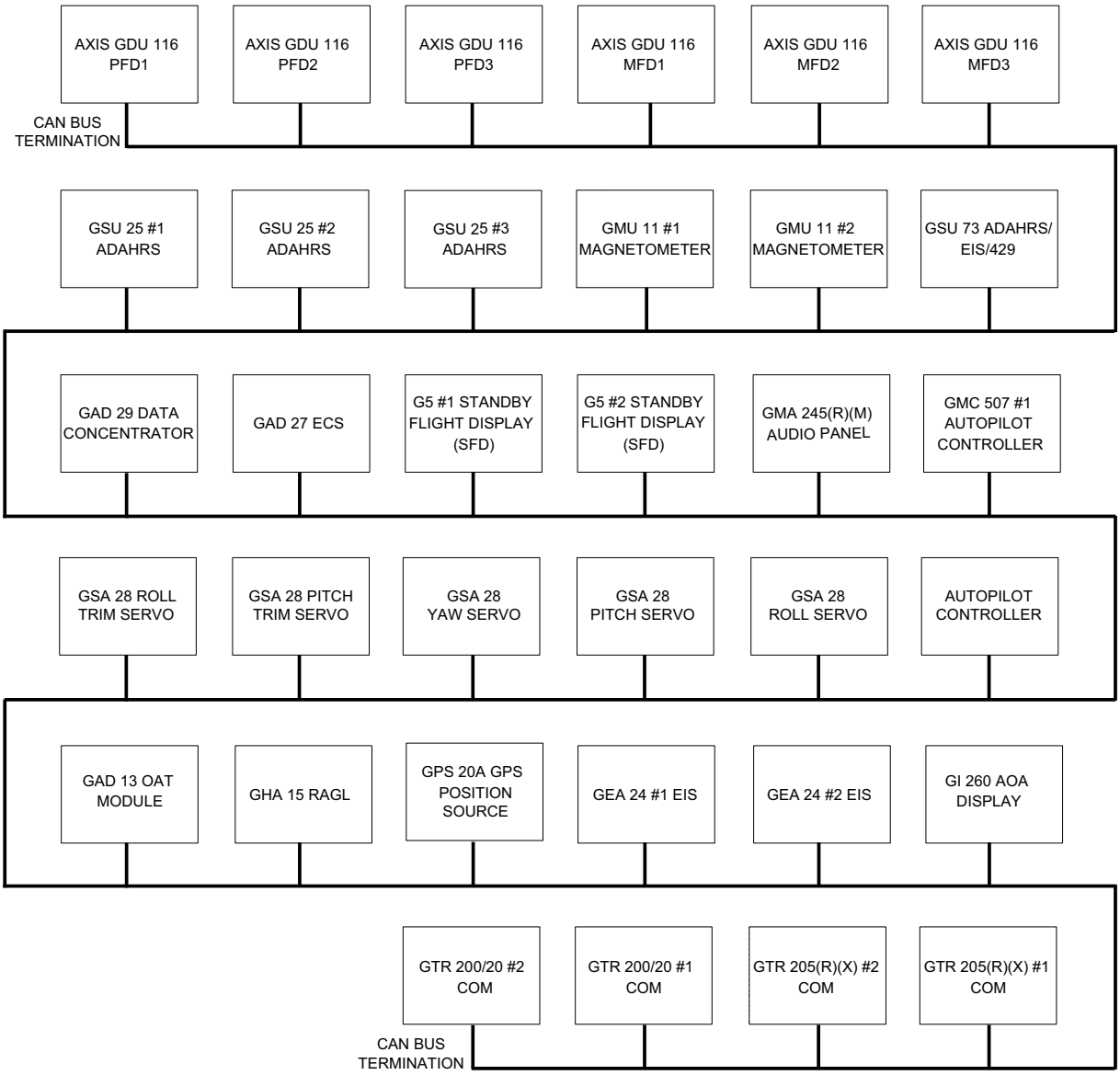

Figure 1-19 CAN Supported LRUs

1.3.2 HSDB Architecture Examples

Examples of system HSDB architecture can be found below. These drawings are intended to demonstrate examples of basic system architecture for the HSDB network. Not all possibilities are shown. Reference the HSDB Architecture guidelines in section 3.2.1 to ensure compliance with supported network topologies.

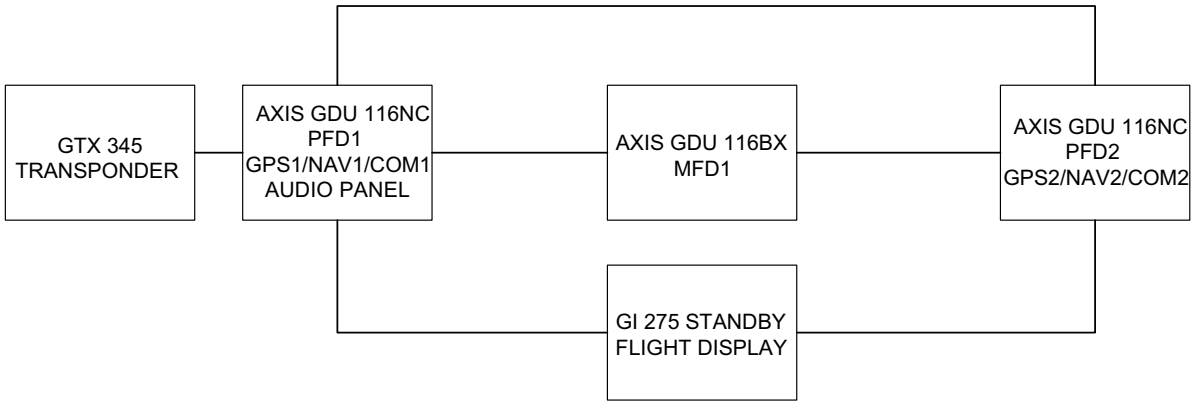

Figure 1-20 Three-Display System with GI 275

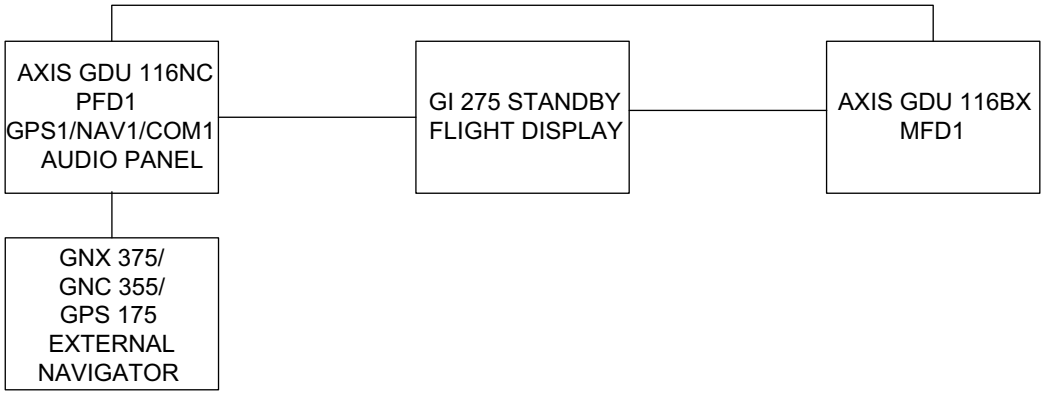

Figure 1-21 Two-Display System with Small Format Navigator, with GI 275

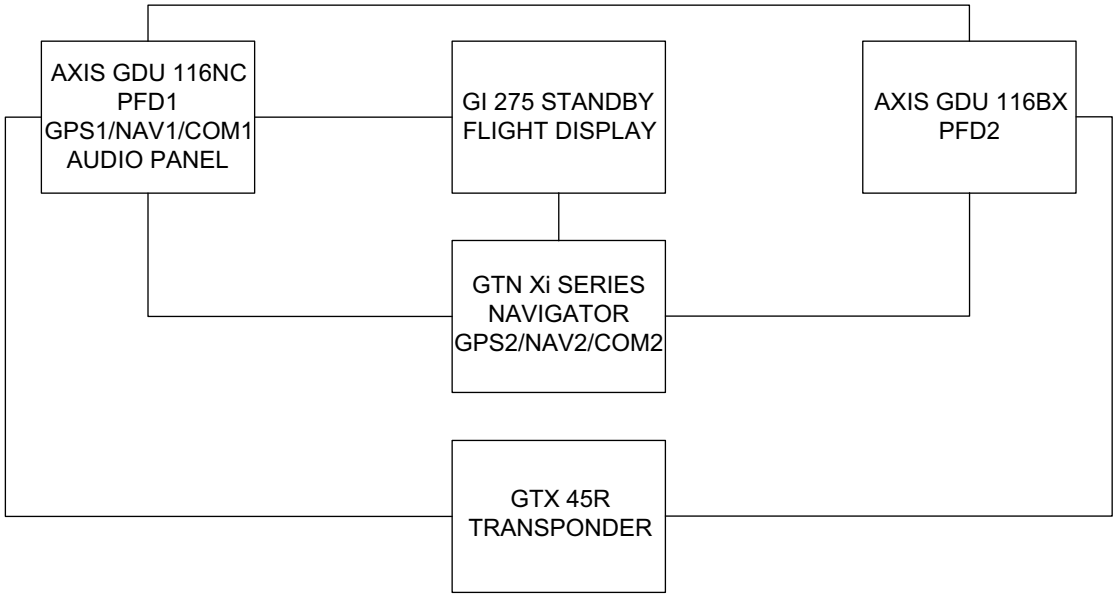

Figure 1-22 Two-Display System with GTN Xi and GI 275

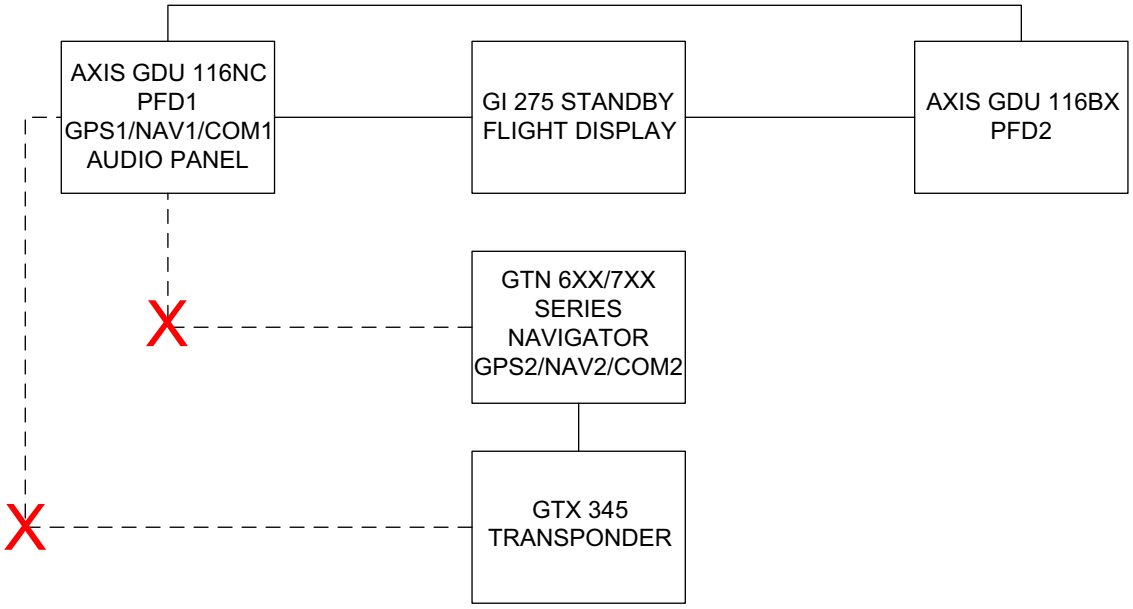

Figure 1-23 Two-Display System with GTN 6XX/7XX

NOTE

If GTN 6XX/7XX and GTX transponder are connected via HSDB, neither can be connected to the primary AXIS system HSDB network.

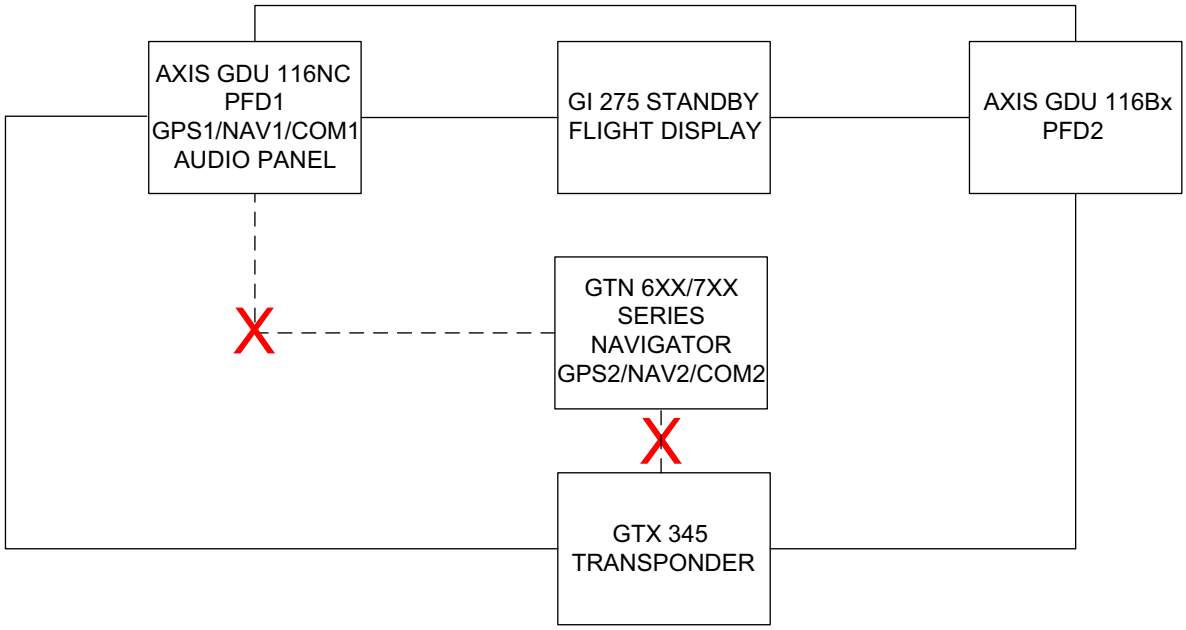

Figure 1-24 Two-Display System with GTN 6XX/7XX (Alternate)

NOTE

If GTX 345 is connected to the primary AXIS system HSDB network, it cannot be connected to GTN 6XX/7XX via HSDB.

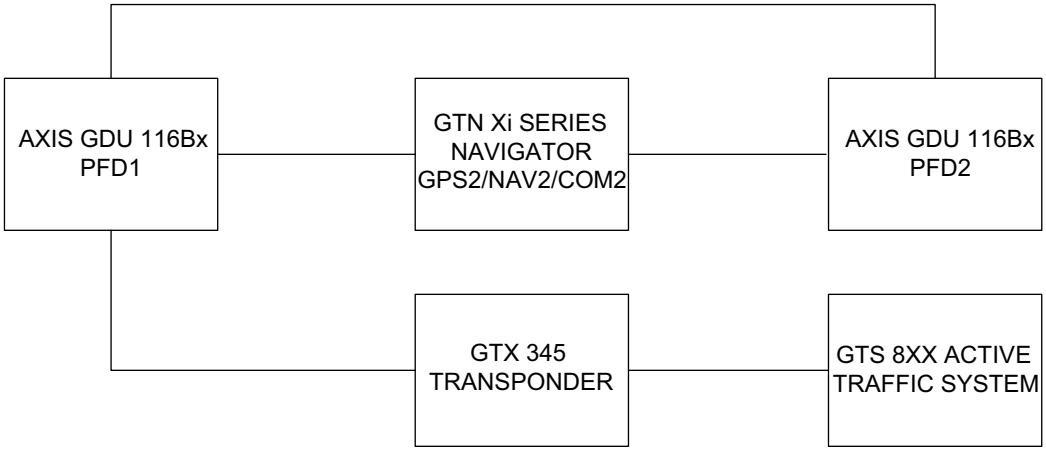

Figure 1-25 Two-Display System with GTS 8XX

2 LIMITATIONS

2.1 Limitations 2-2
2.1.1 G3X Touch 2-2
2.1.2 3rd Party Navigators 2-2
2.1.3 GSU 75 2-2
2.1.4 GEA 110 2-2
2.1.5 Transponder 2-2
2.1.6 GTR 200 2-2
2.1.7 Non-WAAS GNS Units 2-2
2.1.8 AOA Pneumatic Plumbing 2-2
2.1.9 Filtered VOR/LOC/GS Output 2-2
2.1.10 TAWS-B Installation Limitations 2-2
2.1.11 Integrated VFR GPS Installation Limitations 2-2
2.1.12 Traffic Display Limitations 2-2
2.1.13 AFCS Limitations 2-3
2.1.14 Operating Limitations 2-3
2.1.15 Environmental Limitation 2-3
2.1.16 Dual GDU 116C or GDU 116NC Installation Limitations 2-3
2.1.17 Vertical Power Flaps and Trim Control Limitation 2-3

2.1 Limitations

2.1.1 G3X Touch

G3X Touch (GDU 46X) displays cannot coexist in an AXIS system.

2.1.2 3rd Party Navigators

Do not interface to 3rd party GPS/NAV/COM at this time

2.1.3 GSU 75

Must have one non-base display for each GSU 75.

2.1.4 GEA 110

Must have one non-base display to interface to up to two GEA 110s.

2.1.5 Transponder

If a GSU 75 is installed in the system, the AXIS flight display system can only provide transponder control to a GTX 345( ) interfaced via HSDB.

2.1.6 GTR 200

GTR 200 is not supported via RS-232.

2.1.7 Non-WAAS GNS Units

Non-WAAS GNS units are not supported in the AXIS flight display system.

2.1.8 AOA Pneumatic Plumbing

If AOA is enabled on more than one GSU 25 in the aircraft, only a single GAP 26 can be used and its AOA pneumatic plumbing must be paralleled to each GSU 25 for which AOA is enabled.

2.1.9 Filtered VOR/LOC/GS Output

The filtered VOR/LOC/GS ARINC 429 output and LOC/GS filtering setting are meant to be used when interference, such as rotor modulation, causes the VOR/LOC/GS deviation to undesirably oscillate. The filtering in this output should smooth oscillations caused by interference. When this output is used, the GDU 116 ( ) does not meet the Course Deviation Current Response requirements of TSO-C34e, TSO-C36e, ETSO-2C34f, and ETSO-2C36f.

2.1.10 TAWS-B Installation Limitations

- TSO-C151d requirements are only met when TAWS-B is enabled.
- TAWS-B shall not be enabled in systems with a GHA 15 installed.
- If TAWS-B is enabled in AXIS, TAWS-B must be disabled on any cross-side GTN 625/650/750 , GNS 4XX/5XXW, or GNS 480, if present. This does not apply to GTN Xi Series Navigators.
- TAWS-B is not authorized north of 89° north latitude or south of 89° south latitude.
- When an existing GTN has TAWS enabled, the AXIS display will get a free TAWS-B enablement.

2.1.11 Integrated VFR GPS Installation Limitations

Systems that have only an integrated VFR GPS installed do not meet the requirements of TSO-C151d and TSO-C195c.

2.1.12 Traffic Display Limitations

A traffic source meeting TSO-C195c is required to meet TSO-C195c traffic display requirements.

2.1.13 AFCS Limitations

TSO-C198 is not met if a roll or yaw trim servo is configured in the system.

2.1.14 Operating Limitations

Navigation is not authorized north of 89° north latitude or south of 89° south latitude.

2.1.15 Environmental Limitation

GDU 116( ) does not claim waterproofness or fluids susceptibility on the EQF. As a result, the unit must not be installed in areas where water or fluid contamination could be commonly encountered.

2.1.16 Dual GDU 116C or GDU 116NC Installation Limitations

If the internal audio panel is to be used, enable it on PFD1.

2.1.17 Vertical Power Flaps and Trim Control Limitation

If installing a Vertical Power unit, do not use the VP-X's flap and trims.

Flap and trim faults cannot be reset in during flight. Attempting to do so may result in a loss of flap and trim control.

3 PREPARATION

3.1 Selection of System Components 3-2
3.1.1 AXIS Flight Displays 3-2
3.1.2 EIS Sensor Selection 3-7
3.1.3 Antennas 3-8
3.2 Installation Requirements 3-10
3.2.1 HSDB Architecture 3-10
3.2.2 CAN Bus Guidelines 3-11
3.3 Materials and Parts 3-17
3.3.1 AXIS Flight Displays 3-17
3.3.2 AXIS System LRUs 3-18
3.3.3 Commercially Available Parts 3-22
3.3.4 Special Tools Required 3-26
3.4 Electrical Considerations 3-41
3.4.1 LRU Power Requirements 3-41
3.4.2 GDU Power Requirements 3-42
3.4.3 GAP 26 Power Requirements 3-45

3.1 Selection of System Components

3.1.1 AXIS Flight Displays

Use this section to define the display identity and general installation location within the instrument panel for each flight display unit selected in section 1.2.1.

3.1.1.1 AXIS Display User Interface Description

The AXIS flight display is composed of two main user interface windows: Primary Flight Window (PFW) and Multi-function Window (MFW). The PFW displays primary flight and navigation instruments. The MFW includes access to supplemental information relevant to the flight, like the moving map page, traffic scope, engine indication information, and dedicated weather page.

Figure 3-1 Primary Flight Window

Figure 3-2 Multi-function Window

3.1.1.2 AXIS Display Identity Description

A critical step in the installation of the AXIS flight displays is the selection of Display Identity.

AXIS flight displays can be configured with one of two primary “Display Identities,” PFD or MFD.

Up to six AXIS flight displays can exist in a system, three of each identity type.

Units assigned a PFD display ID can be selected to display the PFW to consume the full frame of the display. The user can also split the screen to show the PFW on half the screen, and the MFW on the other half of the screen. The Engine Instrument System (EIS) strip can optionally be shown on either side of the display.

Figure 3-3 Full Screen PFD

Figure 3-4 Split Screen PFD

Units assigned to the MFD display ID can be selected to show the MFW on the full width of the screen, or split with two equivalent MFWs available for the user. The split screen allows for the user to show two MFW functions at the same time, like the traffic and weather pages. It also possible to show PFW information on one of the panes. The EIS strip can optionally be shown on either side of the display.

NOTE

The MFD designation is more flexible, allowing for split screen to show two MFW panes, or one MFW pane and one PFW pane. A unit assigned PFD will always show PFW information on at least half of the screen.

Figure 3-5 Full Screen MFD

Figure 3-6 Split Screen MFD

3.1.1.3 AXIS Display Identity Selection

In a single-display system, configure the display as PFD1.

In a system with multiple displays, the display occupying the instrument panel location most directly in front of the pilot must be assigned PFD1. The other displays may be configured using any of the following combinations:

- Single-display system: PFD1
- Two-display system: PFD1 + MFD1, or PFD1 + PFD2
- Three-display system: PFD1 + MFD1 + PFD2, or PFD1 + MFD1 + MFD2
- Four-display system: PFD1 + MFD1 + PFD2 + MFD2
- Five-display system: PFD1 + MFD1 + PFD2 + MFD2 + either PFD3 or MFD3
- Six-display system: PFD1 + MFD1 + PFD2 + MFD2 + PFD3 + MFD3

If two or more different AXIS Flight display variants are to be installed (GDU 116B vs GDU 116 NAV/COM), the unit with the most functionality must be installed and configured as PFD1, while also meeting the same requirement to be installed in the instrument panel location most directly in front of the pilot.

NOTE

The GDU 116 NAV/COM is considered to have the most functionality, followed by GDU 116C and GDU 116B.

If two GDU 116 NAV/COM or COM displays exist in a system, at least 1 must be assigned PFD1, and installed in front of the pilot. It is recommended the other be installed in the instrument panel location most directly in front of the co-pilot.

Common display combinations are shown below as examples in figure 3-7. Note that in each example, PFD1 is always positioned in front of the pilot, and the most capable display always occupies PFD1.

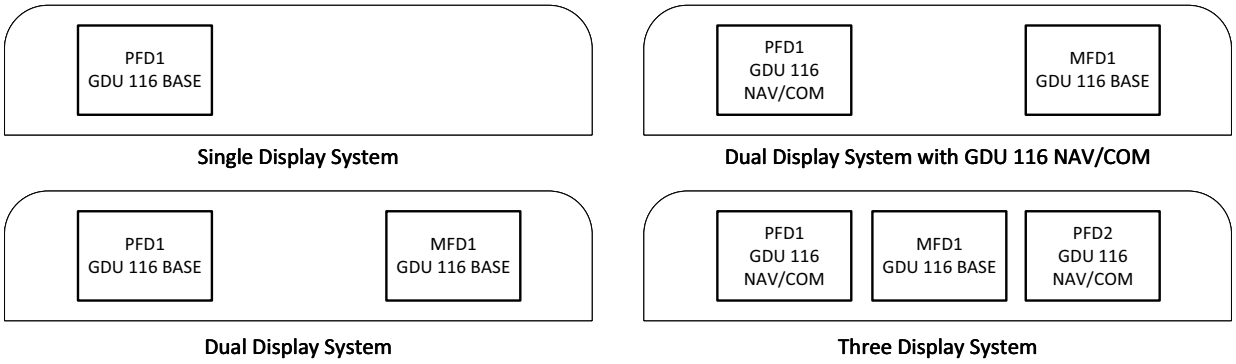

Figure 3-7 Common Display Configuration Examples

3.1.1.4 Display Reversionary Mode

An AXIS flight display can be manually placed in reversionary mode by installing a two pole switch that toggles between open and ground. Reference section 5.5 for more information.

When the switch opens, the display operates normally. When the switch is grounded, the display changes to reversionary mode and assumes the identity of a PFD. This results in flight and navigation instruments being displayed full time on at least half the screen, and other remote LRU controls populating on the databar at the top of the display. Other displays in the system are not affected by manually placing a display into reversionary mode.

The reversionary mode switch can be used in a two display system to install a second display in the MFD position to primarily serve as a supplemental display to the pilot. If a second pilot occasionally flies from the right seat, the reversionary mode switch can be used to quickly switch to a more comprehensive PFD layout for the right seat pilot to use.

Refer to the AXIS flight display pilot's guide for further information about reversionary mode.

3.1.2 EIS Sensor Selection

NOTE

In addition to the engine sensors listed in table C-40, the AXIS flight display system is also compatible with many other sensors (not listed) that output a compatible signal. To determine compatibility, refer to appendix A for the sensor and electrical characteristics of the relevant LRU.

Appendix C includes all of the information necessary to identify which specific engine and airframe sensors are suitable for a wide range of engine types. Table C-40 lists the types of engine/airframe sensors that may be used for the various engine/airframe inputs. In addition, many of the sensors in table C-40 are included in the Garmin AXIS Sensor Kits (section C.12),which are conveniently packaged to cover several common engine configurations. Each of the sensors must be correctly installed (section 4.4.22) and configured (section 5.5) before use.

The AXIS flight display system is highly flexible in its ability to interface to various custom engine and airframe sensors using the General Purpose (GP) inputs on the GEA 24 or GEA 110. Custom pressure, temperature and position can be measured using a variety of the sensors specified in table C-40, and custom names, gauge ranges and labels, and alerting components can be assigned to them. Refer to section 5.5 for more information. Additionally, various system components have discrete inputs available to assign to a variety of functions, to further optimize each cockpit to its specific mission. Refer to section 5.5.3 for more information.

Figure 3-8 MFD Engine Page

The following list of gauges, (if configured) are specifically required by FAR 91.205 and will always be displayed on the EIS display (engine bar). Other gauges will be displayed as space permits based on a predefined priority and user selections.

- RPM
- Oil temperature
- Oil pressure
- Fuel quantity

3.1.3 Antennas

Use section C.13 and the information provided in this section to determine which system antennas are necessary for the AXIS flight display installation.

3.1.3.1 GPS Antenna

Any GDU 116C or GDU 116NC display in the system must be connected directly to an externally mounted GPS antenna.

In a system made up of only GDU 116B displays, an antenna can optionally be connected to every display, however a GPS antenna is only required to be connected to one display in the system (PFD1). GPS position data is shared between GDUs in installations with more than one GDU.

GPS data is used for ADAHRS performance monitoring. Only select GPS sources can provide GPS data for ADAHRS performance monitoring.

The GSU 25 requires at least one of the following:

- AXIS display internal GPS receiver
- GTX transponder with internal GPS, connected via serial
- GPS 20A

The GSU 75 ADAHRS requires a direct connection to a GDU 116C or NC for GPS data.

The AXIS system is capable of displaying navigation data from an external IFR GPS navigator, but this data is not qualified to be used for ADAHRS monitoring.

3.1.3.2 VHF COM Antenna

The GTR 205x, GTR 205R(x), GDU 116C, and GDU 116NC each require a VHF COM antenna that meets the following specifications:

- Standard 50 Ω vertically polarized antenna with coaxial cable
- TSO-C37( ) and C38( ) or TSO-C169( )

3.1.3.3 VHF NAV Antenna

The GDU 116NC requires an external VHF NAV antenna that meets the following specifications:

NAV Antenna

Must meet TSO-C40( ) and C36( ). 50 Ω, horizontally polarized with coaxial cable. If the NAV antenna is a combined VOR/LOC/GS antenna, it must meet TSO-C40( ), C36( ), and C34( ).

Glideslope Antenna

Meets TSO-C34( ). 50 Ω, horizontally polarized with coaxial cable or low-loss splitter used with the VOR/LOC antenna.

Some aircraft may require the use of a splitter and/or diplexer for connection of the VOR/LOC and GS antennas or combination VOR/LOC/GS antennas. Refer to figure 4-165 to determine if a splitter or diplexer is required for the installation.

- Comant Diplexer VOR/GS, Model CI-507
- Garmin P/N 013-00112-00 (Mini-Circuits ZFSC-2-1B+)

3.2 Installation Requirements

3.2.1 HSDB Architecture

The HSDB architecture allows for many connection possibilities. The Ethernet architecture limitations/options shown in this section are used as a guide for common LRU combinations. A summary of the Garmin LRUs with HSDB capability and available ports is shown in table 3-1.

Table 3-1 Garmin LRU HSDB Port Summary

LRU	Number of HSDB Ports
GDU 116B (Base)	3
GDU 116C (COM)	4
GDU 116NC (NAV/COM)	4
GTN Xi	4
GI 275	2
GTR 205R(x)	2
GTS 8XX	1
GTX 345( )	2
GPS 175/GNX 375/GNC 355	1
GNC 215	1

The following considerations are used as a guide in making HSDB connections (not all possibilities are included). Apply the following rules to complete the HSDB connections:

1. When multiple AXIS flight displays are installed, they must be connected to each other either directly or through another AXIS flight display. Use the lowest numbered HSDB port available when making these connections.
2. The pilot's PFD and the co-pilot's PFD must be directly connected, if applicable.
3. The AXIS PFD must be directly connected to its standby flight display, if applicable.
4. A GI 275 standby should be connected a GTN Xi or AXIS PFD 2, if available, to maintain heading and deviation information in the event of an AXIS PFD 1 failure.
5. Systems with a single display and dual GTN Xi units must connect each GTN Xi to the display.
6. Connect other Garmin LRUs via HSDB to the pilot's PFD first, then to the display with a second ADAHRS, if applicable. The next priority is an MFD.
7. A direct HSDB connection is required for 100Mb Ethernet fast sync between an AXIS flight display and each GTN Xi or GI 275 in the system.
8. GNX 375, GPS 175, GNC 355 and GTN Xi series navigators must be connected via HSDB.
9. GTN 6XX/7XX navigators must never be connected to any LRU on the AXIS HSDB network, via HSDB.
10. GTS 8XX must always be connected via HSDB. No serial connections are supported between GTS 8XX and AXIS.
11. GNC 215 may optionally be connected via HSDB.
12. GTX 345(R)(D) and 45R may optionally be connected via HSDB. If connected to a GTN 6XX/7XX via HSDB, neither unit can be connected to the AXIS HSDB network.
13. GI 275 must always be connected to the AXIS system via HSDB. A connection to GI 275 via CAN or RS-232 is not supported.
14. GTR 205R(x) may optionally be connected via HSDB.

3.2.2 CAN Bus Guidelines

The primary digital interface used to exchange data between LRUs in the AXIS flight display system is the Controller Area Network, also known as the CAN bus. CAN was developed by Bosch GmbH in the 1980s, and its specifications are currently governed by ISO 11898-2. CAN is widely used in aviation, automotive, and industrial applications due to its simplicity and reliability.

3.2.2.1 CAN Bus Architecture

The electrical architecture of the CAN bus takes the form of a linear "backbone" consisting of a single twisted wire pair with an LRU connected (terminated) at each end. The CAN bus backbone must be a single linear path, with exactly two distinct ends. CAN bus connections must be daisy-chained from one device to the next.

At each of the two extreme ends of the CAN bus, a 120 Ω resistor is installed to terminate the bus.

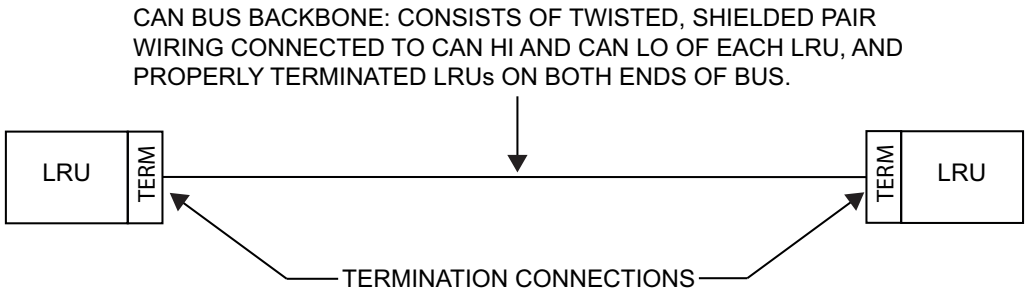

Figure 3-9 CAN Bus Backbone

Multiple LRUs may be connected in a daisy-chain manner along the backbone of the CAN bus, as shown in figure 3-10.

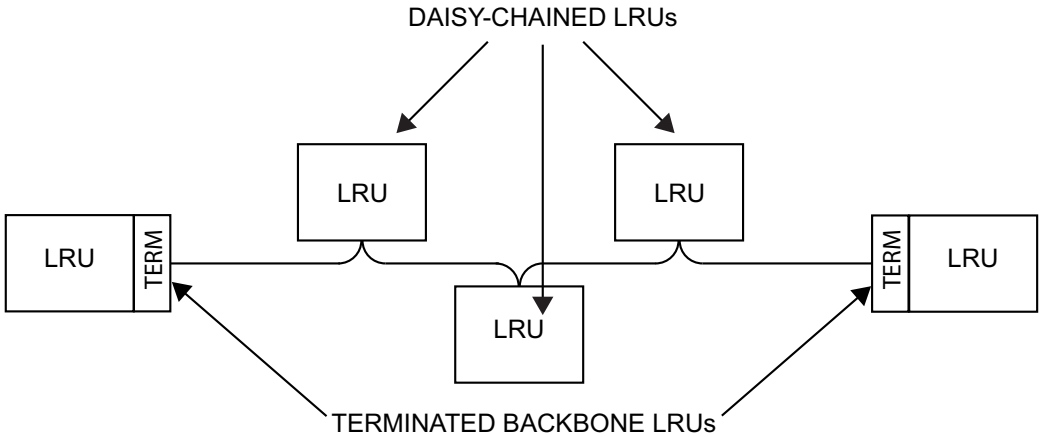

Figure 3-10 Daisy-chained LRUs on Backbone

Daisy-chained LRUs (i.e., LRUs not at the extreme ends of the CAN bus) connect to the CAN backbone through short "stub" or "node" connections (figure 3-10). The length of each node connection should be kept as short as possible, not to exceed 7 inches. Follow the instructions in section 4.3.7 for splicing signal cables. Unshielded wire sections should be kept as short as practical.

Multiple devices must not connect to the CAN bus backbone at the same point. Rather than splicing two or more node connections together, the CAN bus should instead be daisy-chained from one device to the next, as shown in figure 3-11.

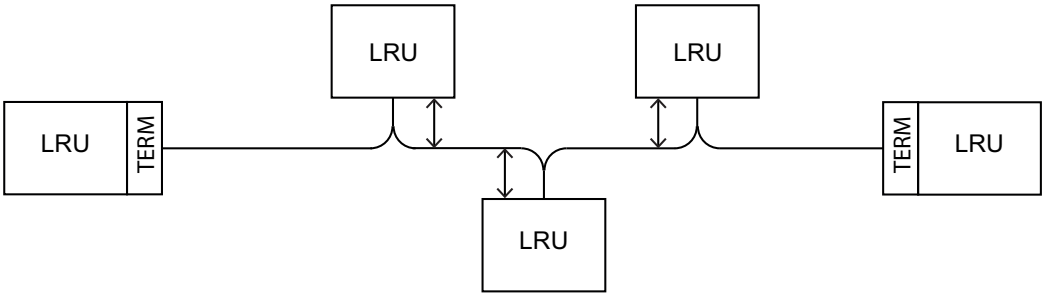

Figure 3-11 Node Connections

The layout of the CAN bus must be a single linear backbone with exactly two distinct end points (figure 3-12). Other layouts such as “star” or “Y” arrangements must be avoided. Similarly, hub devices must not be used with the AXIS CAN bus. (figure 3-13).

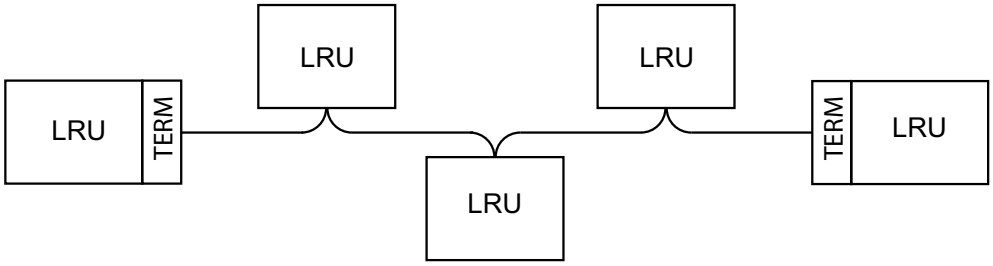

LINEAR CAN BACKBONE, DAISY-CHAINED CONNECTIONS WITH SHORT STUB NODE LENGTHS. MULTIPLE LRUs ARE NOT CONNECTED TO BACKBONE AT THE SAME LOCATION.

Figure 3-12 Correct CAN Wiring Example

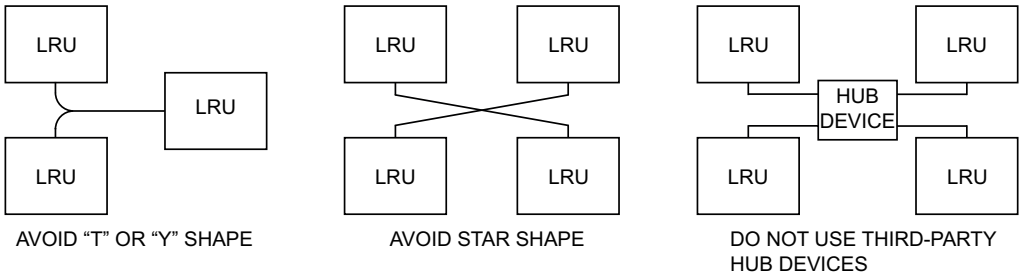

Figure 3-13 Incorrect CAN Wiring Example

3.2.2.2 CAN Bus Length

The CAN backbone should be as short as practical. CAN Bus maximum length is dependent on the type of wire used for the system. The maximum bus length is 32 meters (104 ft) for a system built exclusively of 120 Ω impedance matched wiring.

3.2.2.3 CAN Bus Wire Type

NOTE

CAN bus wiring must only be connected to Garmin LRUs, unless otherwise specified.

For new installations, use 120 Ω impedance matched wire. 120 Ω impedance matched wire is required for the maximum 32-meter bus length and improves overall bus communication.

3.2.2.3.1 Integrating with Systems that Include Existing Garmin CAN Bus

If the aircraft has existing Garmin LRUs connected to a Garmin CAN bus, it is recommended to replace any non-impedance match CAN wire, with impedance matched CAN wire during the upgrade process.

If a system includes any length of non-impedance matched CAN wire, the maximum bus length is limited to 25 meters.

3.2.2.4 CAN Bus Termination

At each of the two extreme ends of the CAN bus backbone, a 120 Ω resistor is installed to terminate the bus. Both ends of the CAN bus should be terminated (figure 3-14), but devices that are not at the ends of the CAN bus should not be terminated (figure 3-12).

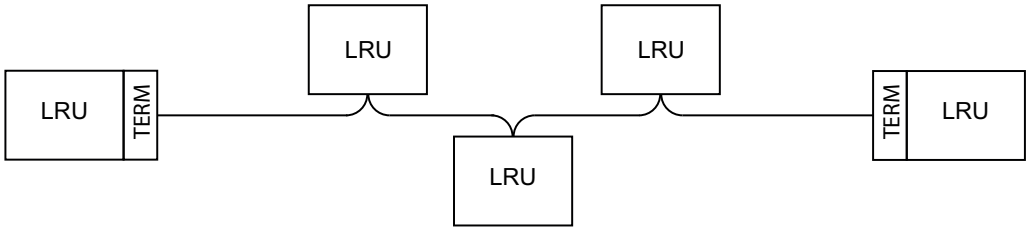

CORRECT - CAN BUS TERMINATED AT EACH END OF BACKBONE

Figure 3-14 Correct CAN Bus Termination Example

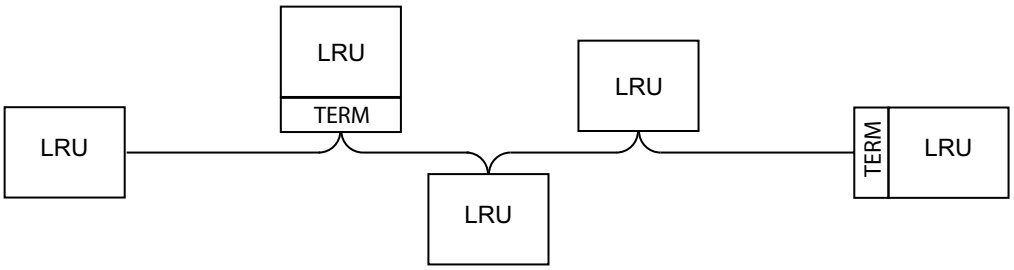

INCORRECT - ONE OF THE TERMINATIONS IS NOT AT END OF BACKBONE

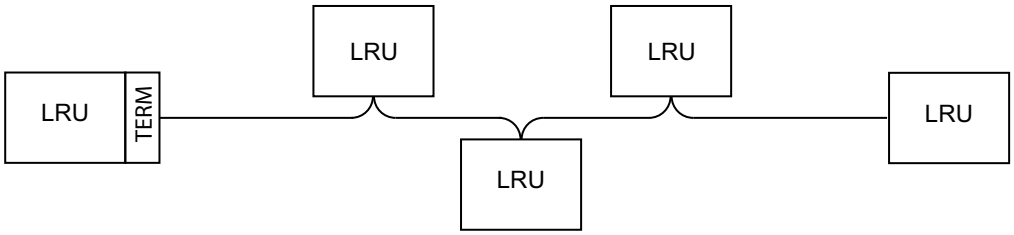

INCORRECT - ONLY ONE END OF BACKBONE IS TERMINATED

Figure 3-15 Incorrect CAN Bus Termination Examples

3.2.2.4.1 Individual LRU Termination Requirements

In the AXIS system, individual resistor components are not required. Instead, termination resistors are provided either within the LRUs themselves or using termination adapters that plug into an LRU's CAN connection.

The GAD 29, GEA 24, GMU 11, GPS 20A, GSU 25, and G5 installation kits provide a 9-pin termination adapter that provides termination when attached to the device's main connector. The termination adapter contains a 120 Ω resistor that is connected between pins 1 and 2.

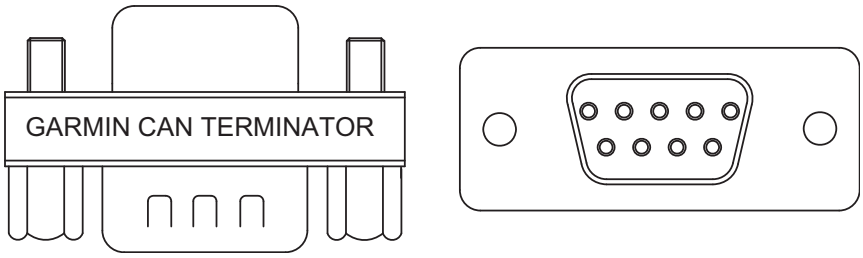

Figure 3-16 CAN Bus Termination (P/N 011-02887-00)
for GAD 29, GEA 24, GMA 245, GMU 11, GPS 20A, GSU 25, and G5

The following LRUs include internal CAN bus terminations. The specific wiring architecture required to terminate each of these units is provided in more detail in appendix B.

- The GDU 116, GAD 27, GHA 15, and GSU 73 contain a 120 Ω resistor inside the unit that provides termination when the CAN LO pin is connected externally to the CAN TERM pin.
- The GMC 507, GSA 28, GTR 20/200, GTR 205X and GTR 205R(x) contain a 120 Ω resistor inside the unit that provides termination when the two CAN TERM pins are connected together.

The GI-260 and GMA 245 do not have provisions for CAN termination. The GI 260 cannot be installed at the end of the CAN bus. The total amount of extra wire length the GI 260 adds to the CAN HI and CAN LO wires should not exceed 0.4 meters (15 inches). The GMA 245 can use the 9-pin termination adapter for a termination solution, by installing the unit in-line rather than directly to the LRU connector. Refer to GMA 245 installation manual for further information.

3.2.2.5 CAN Bus Shielding

The shields for each CAN bus wire segment should be interconnected, forming a continuously connected shield from one end of the CAN bus to the other end as shown in figure 3-17. At minimum, the CAN bus shield should always be grounded to the device connector backshells at the two extreme ends of the bus, but it is acceptable to also ground the shield at any or all other devices on the CAN bus.

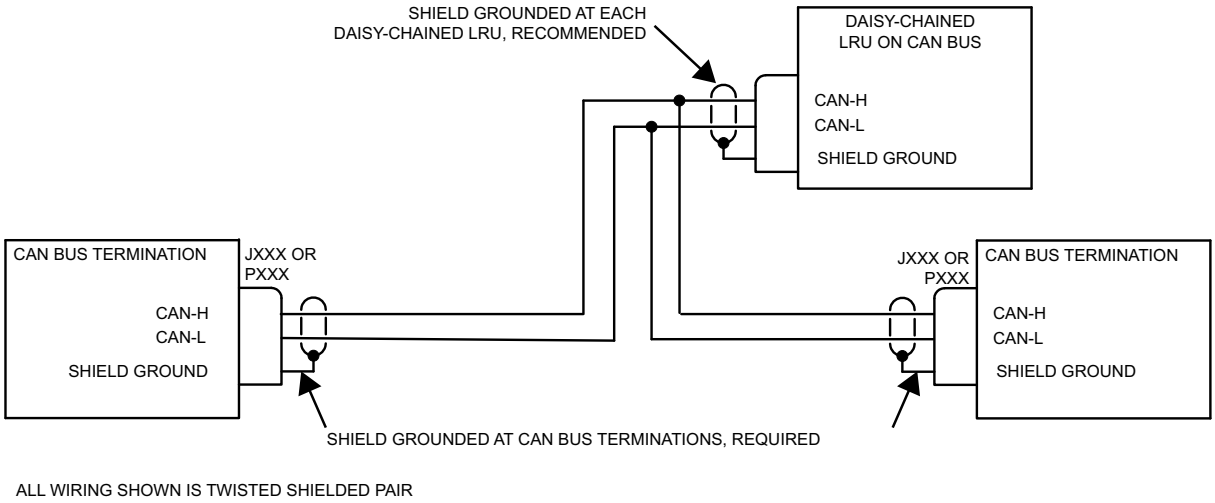

Figure 3-17 CAN Bus Shield Grounding

3.2.2.6 CAN Bus LRU Removal Guidelines

The following should be considered when removing an LRU from the ends of AXIS CAN network:

- GEA 24, GSU 25, GAD 29, GPS 20A, G5, or other devices that uses the 9-pin CAN termination adapter: The CAN bus will remain terminated as long as the CAN termination adapter is left connected.
- GDU 116, GAD 27, GMC 507, or GSU 73: The CAN bus will be unusable until the LRU is reconnected, or the bus is properly terminated at both ends of the CAN backbone.
- GSA 28: A removal adapter (part number 011-03158-00) is provided with each GSA 28 connector kit. This adapter can be used when a GSA 28 is removed from the aircraft. The removal adapter keeps the node on the CAN bus in the same state as when the servo was installed (either terminated or not terminated). The removal adapter also allows trim signals to pass through when no servo is installed.

3.2.2.7 CAN Bus Installation Guidelines

For maximum reliability of the CAN bus, the following guidelines must be followed:

- For proper CAN bus operation, it is important for all devices on the CAN bus to share a common power ground reference. Connect all LRU power ground pins to a single common ground point - do not use local ground points or use the aircraft structure as a ground return path.
- For reliable operation, avoid introducing unnecessary connectors into the CAN bus wiring. If the addition of an in-line connector is unavoidable, use a high-reliability connector with locking features.
- Keep all stub node connections as short as practical. The maximum length of any stub node connection is 7 inches.
- Avoid connecting more than one device to the CAN bus backbone at the same point. Instead, daisy chain the CAN bus backbone from one device to the next.
- Observe proper wiring, shielding, and grounding requirements as described above.
- Terminate the CAN bus at the two extreme ends of the bus, as described above.
- When adding a new device to the CAN bus, evaluate proposed modifications to the CAN bus wiring connections to ensure compliance with all above requirements.

3.3 Materials and Parts

Equipment sourced from Garmin and commercially available parts are required for the installation of the AXIS flight display system. This section provides a description of equipment and installation kits available from Garmin as well as commercially available parts and their requirements.

3.3.1 AXIS Flight Displays

One installation kit is required per display in the AXIS flight display system. Each kit falls into one of two categories, specific to GDU 116B, or specific to GDU 116C/NC.

Additionally, two types of kits exist for each category, new installation or G3X Touch upgrade. Choose G3X Touch upgrade if upgrading from a G3X Touch system, otherwise choose New Installation. AXIS flight display system components and applicable installation kits are supplied by Garmin.

Table 3-2 AXIS Flight Displays

LRU	Part Number	
	Unit	Catalog
GDU 116 Base	011-05799-05	010-03000-00
GDU 116 COM	011-05799-10	010-03001-00
GDU 116 NAV/COM	011-05799-20	010-03002-00
GDU 116 Base (non-TSO)	011-05799-00	010-03004-00

Table 3-3 AXIS Flight Display Install Kits [1]

Install Kit	Installation Type	Part Number
GDU 116B	New	010-14469-01
GDU 116C or GDU 116NC	New	010-14469-02
GDU 116B	G3X Touch Upgrade	010-14469-10
GDU 116C or GDU 116NC	G3X Touch Upgrade	010-14469-12

[1] A configuration module is required for each AXIS flight display. Each display install kit in this table includes one (1) configuration module (011-04037-00).

3.3.2 AXIS System LRUs

For the LRUs selected in table 1-1, use the catalog part number to order the desired units from your Garmin Dealer.

NOTE

Unit Part Number is the identifier that can be found physically printed on the LRU itself. The catalog number is the identifier used to order equipment from your Garmin Dealer.

Table 3-4 AXIS Flight Display System LRUs

LRU	Unit Part Number	Catalog Part Number
GSU 25C	011-02929-55	010-01071-55
GSU 25D	011-02929-56	010-01071-56
GMU 11	011-04349-00	010-01788-00
GMU 44(B)	011-04201-00	010-01708-00
GSU 75	011-03094-01	010-01127-01
GTP 59	011-00978-00 [1]	011-00978-00 [1]
GEA 24B	011-05991-00	010-02770-00
GEA 110	011-03454-01	010-01329-01
GAD 27	011-03876-10	010-01525-10
GTR 205x	011-06748-00	010-03395-00
GTR 205R(x)	011-06749-00	010-03396-00
GSA 28	011-02927-20	010-01068-20
GMC 507	011-04548-00	010-01946-00
GAD 29C	011-03236-20	010-01172-20
GMA 245	011-03519-01	010-01318-03
GMA 245R	011-03784-01	010-01471-03
GMA 245RM	011-03784-10	010-01471-10
GDL 50R	011-03910-10	010-01561-10
GDL 51R	011-03910-50	010-01561-50
GDL 52R	011-03910-30	010-01561-30
GHA 15	011-05259-50	010-02942-00 [1]
GCO 14	011-06537-00	010-02975-01 [1]
GAP 26 Unheated	011-02964-00	010-01074-00
GAP 26 Heated/Unregulated 14V	011-02964-10	010-01074-10
GAP 26 Heated/Unregulated 28V	011-02964-60	010-01074-60
GAP 26 Heated/Regulated	011-02964-20	010-01074-20 [2]

[1] Installation Kit included with LRU.

3.3.2.1 AXIS System LRU Bundles

Table 3-5 and table 3-6 list available LRU kits. These bundle the common system LRUs required for basic function in a convenient kit. The standard kit includes the GSU 25C and GMU 11, the performance kit includes the GSU 25D and the GMU 22. Applicable mounting and connector kits listed in this section are still required to be ordered separately.

Table 3-5 Contents of AXIS Standard LRU (P/N 010-04556-00)

Item	Part Number	Quantity
GSU 25C, Unit Only	010-01071-55	1
GMU 11, Unit Only	010-01788-00	1
GTP 59 OAT Probe Kit	011-00978-00	1

Table 3-6 Contents of High Performance AXIS LRU Kit* (P/N 010-04556-01)

Item	Part Number	Quantity
GSU 25D, Unit Only	010-01071-56	1
GMU 22, Unit Only	010-01196-00	1
GTP 59 OAT Probe Kit	011-00978-00	1

The High Performance Kit must be used if the aircraft airspeed or service ceiling exceeds specifications for the GSU 25C. Refer to section G.11.

3.3.2.2 AXIS System LRU Kits

Each part number listed for each LRU is required for the installation of that LRU, unless otherwise specified. Individual kits can be ordered as necessary, to facilitate the installation of mounting racks and other equipment throughout the build process.

Table 3-7 AXIS System LRU Kits

LRU	Kit Description	Catalog Part Number
GSU 25C/D	GSU 25 Connector Kit	K10-00181-00
GMU 11	GMU 11 Installation Kit	011-04349-90
GMU 44(B)	GMU 44(B) Connector Kit	011-04205-00
	GMU 44(B) Universal Mount [1]	011-01779-01
	GMU 44(B) Installation Rack	125-00437-00
GSU 75	GSU 75 Remote Rack	117-00608-00
	GSU 75 Connector Kit	011-03109-00
GEA 24B	GEA 24 Connector Kit	011-02886-00
GEA 110	GEA 110 Install Tray	011-03941-00
	GEA 110 Connector Kit [2]	011-03527-50
	GEA 110 Sealed Connector/Config Module Kit [2]	011-03527-51
GAD 27	GAD 27 Connector Kit	011-03877-00
GAD 29C/D	GAD 29 Connector Kit	011-03271-00
GMA 245R/RM	GMA 245R Remote Side Mount Bracket [3]	011-04150-00
	GMA 245R Remote End Mount Bracket [3]	011-04150-11
	GMA 245R Connector Kit	011-03828-00
GMA 245	GMA 245 Install Rack	115-00262-00
	GMA 245 Connector Kit	011-02302-00
	GMA 245 Back Plate	011-00678-00
GAP 26	GAP 26 Adjustable Mounting Kit	010-01380-00
GDL 50R/51R/52R	GDL 5XR Connector Kit	010-12498-60
GTR 205x	GTR 205x Install Rack	115-03651-00
	GTR 205x Connector Kit	011-05779-10
	GTR 205x Back Plate	011-05691-00
GTR 205R(x)	GTR205R(x) Install Rack	115-03651-00
	GTR 205R(x) Connector Kit	011-05779-10
	GTR 205R(x) Back Plate	011-05691-00

LRU	Kit Description	Catalog Part Number
GSA 28	GSA 28 connector kit	011-02950-00
	GSA 28 connector kit, 90°	011-02950-01
	GSA 28 stop bracket kit	011-02951-00
	Servo Mount	[4]
GMC 507	GMC 507 Connector Kit	011-01824-01
	GMC 507 Installation Rack [5]	010-12700-10

[1] Optional. Refer to section 4.4.7.4.2 for more information.
[2] Pick one type of connector kit.
[3] Pick one type of bracket.
[4] Refer to table 4-41 for complete list of available servo mounting solutions.
[5] GMC 507 mounting rack optional. Refer to section 4.4.9.3.2 for more information.

3.3.3 Commercially Available Parts

The AXIS flight display system is designed to be installed using standard parts and accessories. The following may be required for the installations:

- Push-pull manually resettable circuit breakers or other trip-free, push-pull circuit breaker type as specified in the aircraft parts catalog
  - MS26574, MS22073, or Garmin 355-00010-XX
- Fuses
  - MIL-F-15160 size 3AG
- Fuse holders
  - MIL-PRF-19207 (FHN series), GPN 330-01791-10
- Current shunts
  - AA55524
- Master warning/caution indicator lamps
  - MS25041-2 (red)
  - MS25041-4 (amber)
  - MS25237-327 (GE or JKL lamp number 327, 28VDC)
  - MS25237-330 (GE or JKL lamp number 330, 14VDC)
- Insulated, stranded, electrical wire
  - MIL-W-22759/18 (recommended for compatibility), MIL-W-22759/16, MIL-W-22759/34. If MIL-W-22759/18 wire is utilized, extra care must be taken to adequately support and protect the wiring due to its thinner insulation
- Shielded electrical cable (one of the following):
  - MIL-C-27500 with M22759/16 wire (TE) or M22759/18 wire (TG) and ETFE jacket (14)
  - M22759/34 (SD) wire and cross-linked modified EFTE jacket (23 or 73)
- 50 Ω coaxial cable
  - MIL-DTL-17
- Ethernet cable, aircraft grade category 5, for HSDB interfaces. Use only cables listed in table 3-8.

Table 3-8 Approved Ethernet (HSDB) Cables

Manufacturer	Cable P/N	Gauge
PIC WIRE AND CABLE	E10422 [1]	22 AWG
	E10424	24 AWG
	E12424	
EMTEQ	D100-0824-100	
THERMAX	MX100Q-24	
CARLISLE IT	392404	
GIGAFLIGHT	GF100T-24CAT5	

[1] E10422 cable is not recommended because of the larger insulation diameter, making it very hard to work with in the high density connectors. E1042x cable is also not recommended due to insulation shrinkage that can occur.

- 120 Ω CAN bus wire. Use only cables listed in table 3-9.

Table 3-9 Approved CAN Bus Wire

Manufacturer	Contact Info	P/N
GigaFlight Connectivity	GigaFlight Connectivity Inc. 6180 Industrial Ct. Greendale, WI 53129 United States Toll Free: +1 (844) 303-1093 Phone: +1 (414) 488-6320 Email: info@gigaflightinc.com	GF120-24CANB-1
		GF120T-24CANB
Carlisle IT	Carlisle Interconnect Technologies 5300 W. Franklin Drive Franklin, WI 53132 United States Toll Free: +1 (800) 327-9473 Phone: +1 (414) 421-5300 Fax: +1 (414) 421-5301	CAN24TST120(CIT) [1]

[1] Must be ordered from the listed facility.

- Wire bundle routing, securing, and management supplies, as required
  - Cable ties, MS3367
  - Lacing cord, A-A-52080 (MIL-T-43435)
- Adel Clamps of various sizes for wiring in the engine cowling
  - MS21919WDGXX
- Ring terminals
  - MS25036, MS20659, M7928
- BNC/TNC coaxial connector, male, crimp
- MIL-PRF-39012
- Shield terminators
  - AS83519/1-X, AS83519/2-X, or equivalent
    - AS83519/X-2 for single conductor wire
    - AS83519/X-3 for twisted-pair and triple conductor wire
    - AS83519/X-4 for RG-400 coax
  - M83519/2-X
- Standard heat-shrink tubing
  - M23053/5 (X=color)
    - M23053/5-104-X for single conductor wire
    - M23053/5-105-X for insulating twisted-pair wire
    - M23053/5-106-X for insulating triple conductor wire or RG-400 coax
- Self-sealing heat-shrink
  - AMS-DTL-23053/4 (P/N M23053/4-103, Tyco P/N SCL-1/4-0-STK, or Alpha Wire P/N FIT-321-1/4)

- Silicone fusion tape
  - A-A-59163 (MIL-I-46852C or equivalent)
- Environmental splice

AS81824/1-X (where X = size) or equivalent

- Flat or Tubular braid, 1/16ℹ for the GMU

AA59569F36T0062, AA59569R36T0062, or equivalent

- Round or Tubular over-braid, 0.171ℹ for the fuel flow transducer (if required)

QQB575R36T171, AA59569R36N171, or equivalent

- Tubing and fittings for the Pitot and static air plumbing to the GSU units
  - Refer to aircraft-specific parts catalog for approved Pitot and static connector part numbers
- 2024-T3 or 6061-T6 Aluminum, varying thicknesses
  - AMS-QQ-A-250/5 (2024)
  - AMS 4025, AMS 4027, or AMS-QQ-A-250/11 (6061)
- Headphones
  - 500 Ω nominal impedance
- Microphone
  - Low impedance, carbon or dynamic, with transistorized pre-amp

For GEA 24(B) and GEA 110

- Type K or J stranded thermocouple extension wire, 20-24 AWG, 150ºC or greater
  - ASTM E230, NIST ITS 90, ASTM E 207, ASTM E 220, or AMS 2750
    - Watlow SERV-RITE P/Ns K24-3-507 and J20-3-507
- Fiberglass sleeving
  - MIL-I-3190/6
- For P-lead interfaces, Resistors 400k Ω(+/-10%), 0.5W minimum (one of the following)
  - MIL-R-10509
  - Garmin P/N 913-00010-01
- Mating connector for stainless steel pressure transducers
  - PT06E-8-4S(SR), (P/Ns 494-30030-00, 494-30031-00, 494-30032-00)
- TSO-C53a Type C or D hose for the fuel flow and pressure sensors
  - Aeroquip 303 hose with AE102 sleeve and 900591B clamps or Aeroquip AE466

For GMA 245(RM)

- Resistors, 390 Ω (+/-5%), 0.25W minimum
  - MIL-R-10509 (i.e. RN60D3900FB14, RN60D3920FB14, RN65C3900FB14)

For GAP 26

- Switches
  - MIL-DTL-3950 (i.e. Honeywell P/N 1TL1-2)
- Screws
  - 4x, #6, MS51957-26
  - 2x, #6, MS51957-32
  - 4x, #8 MS24693-CXX (countersunk) or #8 MS51957-XX (pan head)
- Washers
  - 2x, #6, NAS1149CN632R
  - 4x, #8, NAS1149CN832R
- Nuts
  - 2x, #6, MS21044C06
  - 4x, #8, MS21044C08

For the Wig-Wag

- Switches, high current (>5A)
  - MIL-DTL-3950 (i.e. Honeywell P/N 2TL1-10)

For Remote Mount of GMU 11 in Non-metallic Wingtip

- Tinned copper flat braid, 1/4in
  - QQB575F36T0250
- Electrical tie-down strap, adjustable
  - MS3367-(1, 2, or 7)-X
- Terminal lug, #10, uninsulated
  - MS25036-108
- Terminal stud, #10
- Terminal lug, #8, uninsulated
  - MS25036-153

For NAV Antenna Interface (if required)

Some aircraft may require the use of a splitter or diplexer for connection of the VOR/LOC and GS antennas, or combination VOR/LOC/GS antennas. Refer to figure 4-165 to determine if a splitter or diplexer is required for the installation.

- Garmin P/N 013-00112-00 (Mini-Circuits ZFSC-2-1B+)
- Comant Diplexer VOR/GS, Model CI-507

3.3.4 Special Tools Required

The following equipment is required to complete the AXIS flight display installation and to perform the post-installation checkout of the system:

- Ground power cart (capable of supplying power to the aircraft systems and avionics)
- Calibrated air data test set
- Calibrated VHF NAV test set
- Low resistance ohmmeter
- Calibrated digital level
- Crimp tool listed in table 3-10

Table 3-10 Recommended Crimp Tools

Manufacturer	Hand Crimping Tool	Standard Density 20-24 AWG		High Density 22-28 AWG	
		Positioner	Insertion/ Extraction Tool	Positioner	Insertion/ Extraction Tool
Military Specification P/N	M22520/2-01	M22520/2-08	M81969/14-02 M81969/1-02	M22520/2-09	M81969/14-01 M81969/1-04
Positronic	9507	9502-5	M81969/1-02	9502-3	M81969/1-04
ITT Cannon	995-0001-584	995-0001-604	980-2000-426	995	N/A
AMP	601966-1	601966-5	91067-2	601966-6	91067-1
Daniels	AFM8	K13-1	M81969/1-02	K42	M81969/1-04
Astro	615717	615724	M81969/1-02	615725	M81969/1-04

The following equipment may be required based on the units being installed and the particular aircraft. Refer to section 4 for information.

- Laser square
- Protractor tool
- Plumb bob
- Aircraft jack set

3.3.4.1 Special Tool Overview

Avionics installation require special tools. Refer to table 1-1.

Installing avionics primarily involves the following steps:

1. Identifying the proper and/or desired location of your chosen units (AXIS GDU, GTN Navigator, Remote mount radio, etc.)
2. Identifying the proper location for antennas (GPS, VHF COM and NAV, etc.) and other sensors (Pitot tubes, OAT probe, etc.)
3. Installing LRUs, antennas, and sensors - then connecting them together to form an integrated system.

Tools used to install an AXIS flight display will perform one of the following tasks:

- Cutting
- Stripping
- Crimping
- Inserting/Extracting
- Heating
- Labeling

3.3.4.2 Cutting Tools

Flush Cut Diagonal Side Cutters

WARNING

To avoid laceration injuries from improperly cut cable ties, do not use diagonal side cut pliers.

Flush cut pliers can get right up next to the locking feature of a cable tie and cleanly cut away the excess tail of the cable tie. Cutting wire and wax string is common use. The “flush cut” nature of these kinds of cutting pliers is needed to properly cut plastic cable ties.

Figure 3-18 Flush Cut Diagonal Side Cutter

Tubing Cutters

CAUTION

To prevent burrs and debris entering pneumatic lines, do not use a hacksaw to cut tubing.

Most Pitot-static installations use some form of 1/4” O.D. plastic tubing (Poly-Flo or similar). Use a proper guillotine style hand cutter. These tools use a jaw that keeps the pneumatic line properly seating during the cut, and a sharp blade which quickly slices through the line leaving no debris behind. A ratcheting PVC cutter is also acceptable.

Figure 3-19 Tubing Cutters

Cable Cutting Pliers

CAUTION

To avoid damaging multi-strand wire bundles and RG-400 coax cable, do not use diagonal side cutters.

For larger multi-strand wire bundles and RG-400 coax cable use a proper set of cable cutting pliers. The jaws of these cutters are rounded. The rounded shape of the jaw helps to uniformly shear material of a larger diameter. A clean cut on your coax cable will set you up for success when it comes time for stripping the end of the cable and preparing for a TNC/BNC crimp connection.

Figure 3-20 Cable Cutting Pliers

Miscellaneous Cutting Tools

For jobs requiring fine-detail cutting operations, have the following available:

- Razor blades
- Hobby knife
- Scissors

Figure 3-21 Miscellaneous Cutting Tools

3.3.4.3 Stripping Tools

Wire Strippers

Automatic wire stripping pliers are usually more suited for smaller gauge wire, as seen in the installation. Once you've positioned the wire in the jaws of the pliers, one squeeze of the plier handles grasps the wire, cuts into the insulation of the wire, and slides the insulation off the end of the wire. After you hear a click, release the pressure on the plier handles.

Figure 3-22 Wire Strippers

Coax Cable Strippers

NOTE

To avoid inconsistent cutting, use a coaxial cable stripper instead of a razor blade.

RG-400 (MIL-DTL-17) coax cable is used to connect the antennas (VHF NAV, VHF COM, GPS, etc.,) to avionics. The coax cable is terminated at each end with BNC (quarter-turn style that clicks when seated) and TNC (threaded style) connectors. These connections require a stripping process at the end of your coax cable.

The coax cable gets stripped in three sections. Refer to section 4.1.3.

- The first third closest to the end of the cable gets stripped all the way down to the center conductor.
- The second section removes the external insulation and shielding, but leaves the dielectric and center conductor.
- The third section gets stripped of only the external insulation leaving the shielding, dielectric, and center conductor.

After stripping the coax cable and removing the relevant material from each section, you'll be left with a stair step appearance all the way down to the center conductor. It's very important to properly space out each cut and not cut too deep in the wrong section. The coax stripper has properly spaced blades which are set for the correct cutting depth along the splice.

To use the coax stripper:

1. Clamp the tool down onto the end of the coax cable.
2. Rotate the tool around the end of the cable a couple times to make the cuts in the cable.
3. Remove the tool.
4. Remove the material from each section.

NOTE

The coax cable strippers from hardware stores for RG-58 cable are not appropriate to use with RG-400. Use coax cable strippers that are specific to RG-400 cable.

Figure 3-23 Coaxial Cable Strippers

3.3.4.4 Crimping Tools

Pin/Socket Crimper

Each connector in AXIS flight display system utilizes either pin or socket contacts to pass information and power to the components in the avionics system. It is critical to properly crimp the pins/sockets to the end of each of the wires.

Considerations:

- Use a crimper that meets MIL SPEC M22520/2-01 (figure 3-24)
- Purchase MIL SPEC M22520/2-08 and M22520/2-09 positioners or MIL SPEC M22520/2-07 positioner for GHA 15 installations (figure 3-25)

To use the crimper and positioner:

1. Determine the size of the contact and the gauge of the wire
2. Use table 3-11, table 3-12, or table 3-13 to determine which positioner to use.
3. Insert the positioner into the crimper.
4. Push down while turning 90°. A sticker on the positioner provides you with the correct selector knob setting for a given gauge wire.
5. Remove the pin (if installed) and rotate the selector knob match the selector number to the arrow.
6. Release the knob and re-install the pin.

NOTE

For pins GPN 336-00022-01 used in the AXIS configuration module installation, use the M22520/2-08 positioner and set the selector knob on the crimp tool to 6.

7. After stripping the wire slide the pin or socket over the bare wire.

The pin/socket should slide over the wire and bottom out before the pin/socket comes in contact with the wire insulation. There should be slight gap between the contact and insulation. Observing this gap ensures that enough wire has been inserted into the contact before performing the crimping operation.

8. Place the pin/socket (with wire still inside) into the crimping tool ensuring that the contact bottoms out into the tool.

9. Squeeze the handles of the crimping tool until ratcheting action stops.
10. Release the handles and observe the crimped contact.
11. Perform a light tug test on the contact and wire to ensure a proper crimp was achieved.

Figure 3-24 Crimping Tool (MIL SPEC M22520/2-01)

MIL SPEC M22520/2-07

MIL SPEC M22520/2-08

MIL SPEC M22520/2-09

Figure 3-25 Positioners

Refer to the following tables when determining which positioner to use in crimping tool.

Table 3-11 High Density Pins for Positioner M22520/2-07

Positioner	High Density 22D AWG Pins [1]
M22520/2-07	GPN 336-00051-00
	MIL SPEC: 39029/56-348

[1] These pins are used in the connector for the GHA 15.

Table 3-12 Standard Density Pins and Sockets for Positioner M22520/2-08

Positioner	Standard Density 20 AWG Pins	Standard Density 20 AWG Sockets
M22520/2-08	GPN 336-000024-00	GPN 336-00022-00 [1]
	MIL SPEC: M39029/64-369	MIL SPEC: M39029/63-368

[1] The configuration module harness uses 28 AWG wire. The size 20 standard density pins used for the configuration module installation have a special thicker wall to receive the small 28 AWG wire from the configuration module harness. For these special pins (Garmin Part Number: 336-00022-01), use the M22520/2-08 style positioner and set the selector knob on the crimp tool to 6.

Table 3-13 High Density Pins for Positioner M22520/2-09

Positioner	High Density 22D AWG Pins
M22520/2-09	GPN 336-00021-00
	MIL SPEC: M39029/58-360

Terminal Crimper

MS25036 series terminals are known as Pre-Insulated Diamond Grip (PIDG) are industry standard for electrical terminal connections. PIDG terminals come in different styles with ring terminals, knife/handshake terminals, and MS25181 butt splices. The insulation on the terminals are color coded:

- Red insulation for 22-16 gauge wire
- Blue for 16-14 gauge wire
- Yellow for 12-10 gauge wire

NOTE

PIDG terminals are designed for mechanical connection to the wire and are specially designed to resist against vibration. Do not buy terminals at the hardware or auto parts store.

The AMP Pro Crimper II (AMP P/N 58433-3) is recommended and comes with the 58423-1 die set required to crimp the red, blue, and yellow PDIG terminals. Refer to figure 3-26.

To use this tool,

1. Insert the terminal into the die.
2. Squeeze the crimper just enough to hold the terminal in place. You'll want the strain-relief indenters of the die on the side facing the wire.
3. Align the edge of the insulation on the terminal tongue side flush with the die.
4. Insert the stripped wire into the terminal
5. Squeeze down on the handles of the tool to perform the crimping operation.

Adjustments can be made to the crimper tool to adjust the magnitude of the crimp. More information on how to use the AMP Pro Crimper II (P/N 58433-3) with the 58423-1 die set can be found at by searching for the TE Connectivity Instruction Sheet, P/N 408-9252. Refer to figure 3-27. Website: https://www.te.com/en/home.html

Figure 3-26 AMP Pro Crimper II and Die Set

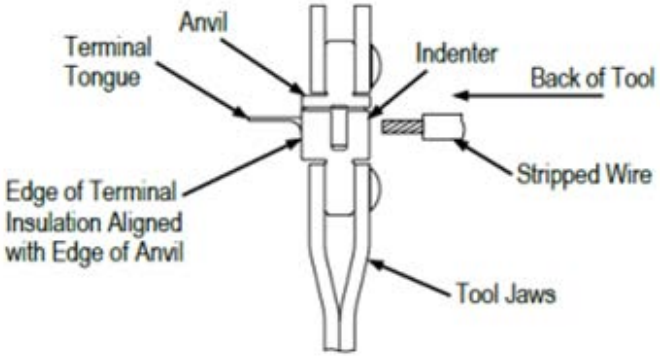

Figure 3-27 TE Connectivity Instruction Sheet (408-9252)

BNC/TNC Connector Crimper

BNC and TNC connectors are used on RG-400 (MIL-DTL-17) coax cables throughout the AXIS installation. BNC connectors are a twist and click type connector, while TNC connectors require a threaded connection. BNC connectors are found in communication and navigation antennas, while TNC connectors are found in IFR WAAS GPS antenna installations.

The crimper used for PDIG terminals can also be used to crimp BNC and TNC connectors. Purchase the AMP P/N 58436-1 die set (figure 3-28) to crimp BNC and TNC connectors. Refer to figure 3-29 for ferrule position.

After the coax cable has been properly stripped:

1. Insert the center contact onto the center conductor wire.
2. Verify the center contact is all the way seated into the .068" die location. The contactor flange pressed against the die.
3. Cycle the crimper tool to crimp the contact onto the center conductor wire.
4. Slide the ferrule over the coax cable and any necessary heat-shrink labeling.
5. Push on the connector until it snaps.
6. Verify the braid of the coax cable slides over the connector.
7. Slide the ferrule over the braiding until it makes contact with the connector.
8. Place the assembly into the .213" die location, ensuring the crimping die is also flush with the connector.
9. Cycle the crimper tool once more to crimp the ferrule around the coax cable.

Figure 3-28 AMP Die Set (P/N 58436-1)

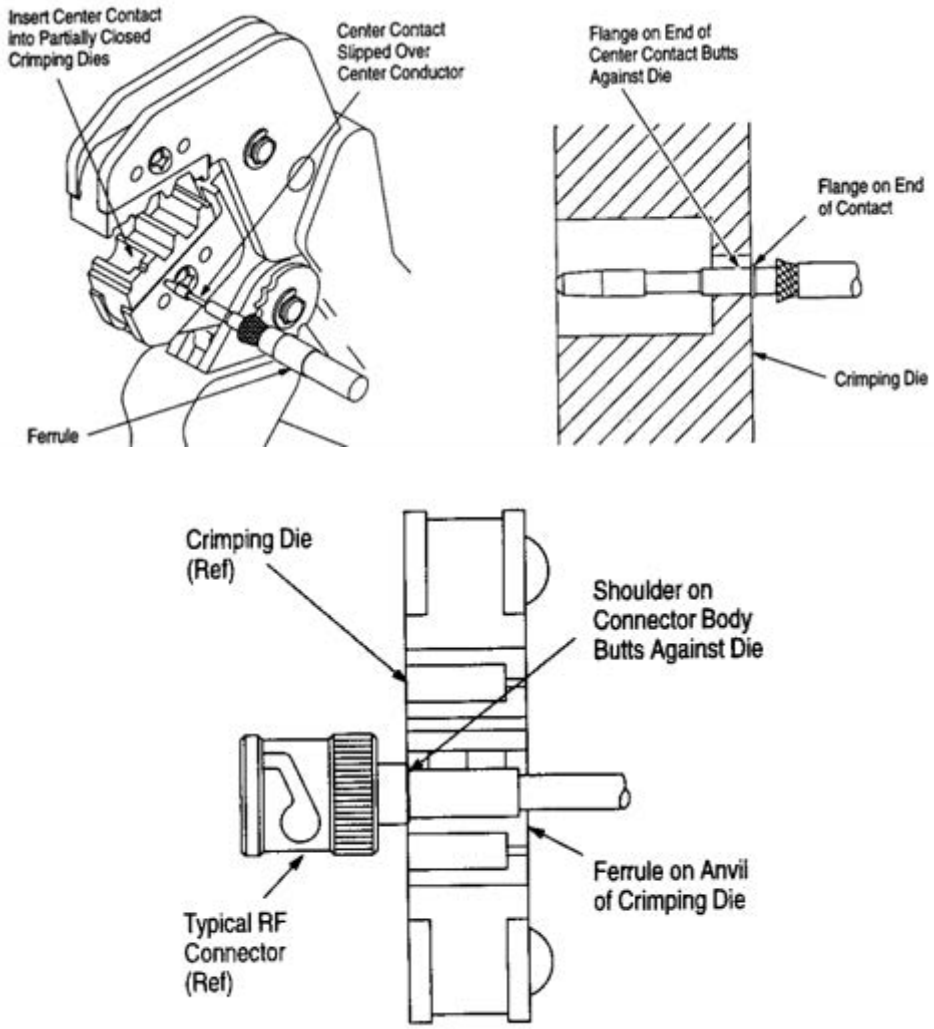

Figure 3-29 Ferrule Positioning

Environmental Butt Splice Crimper

Low-profile environmental butt splices (manufactured by Raychem and conforming to MIL-S-81824) are necessary for tight spaces. Butt splices are composed of a metal inner sleeve and a heat-shrinkable outer sleeve.

MIL-S-81824 environmental butt splices are color coded as follows:

- Red for 20-26 gauge wire
- Blue for 16-20 gauge wire
- Yellow for 12-16 gauge wire

Use a crimping tool that meets MIL SPEC M22520/37-01. How to use environmental butt splices:

1. Slide the outer sleeve over the wire to be spliced.
2. Insert wires at both ends of the metal inner sleeve.
3. Crimp the inner sleeve.
4. Slide the outer sleeve over the connection.
5. Apply heat to the outer sleeve until it shrinks around the connection.

A crimper that conforms to MIL SPEC M22520/37-01 are specifically designed to install the metal inner sleeve connection found in MIL-S-81824 environmental butt splices.

Figure 3-30 Crimper (MIL SPEC M22520/37-01)

Figure 3-31 Crimper Locating Fixture (M22520/37-01)

3.3.4.5 Tools for Contact Insertion/Extraction

D-Subminiature (D-sub) Connector Pin/Socket Insertion and Extractor Tools

The basic tool needed for insertion is MIL SPEC M81969/1-02 (red and white) and for extraction MIL SPEC M81969/1-04 (green and white). The metal tipped versions of the tools is recommended (figure 3-32). Use the red-and-white tool for standard density, size 20 contacts. Use the green-and-white tool for high density, size 22 contacts. The white side of these tools is used for contact extraction, and the red/green side of the tool is used for contact insertion.

NOTE

Do not use excessive force during insertion or extraction.

To use the insertion tool:

1. Slide the wire and contact into the tool allowing the shoulder of the contact to come into contact with the metal tip of the tool.
2. Align the contact with the proper receptacle in the rear of the D-sub connector.
3. Use the insertion tool to push the contact into place.
4. Remove the insertion tool.
5. Gently pull the wire to verify the contact is properly seated and locked into its receptacle.

To extract a contact:

1. Slide the wire into the valley of the extraction tool.
2. Press the extraction tool into the contact receptacle in the rear of the D-sub connector.
3. When inserted, rotate the tool around the wire to ensure that the latches of the contact have been fully disengaged.
4. To remove the contact, give a slight pull on the wire. and the contact should come out of the D-sub connector along with the extraction tool.

Tweezer-Type Extraction Tools

For the tweezer-type tools (figure 3-33) search for the following:

Standard density size 20 contacts:

- Insertion: MS27495A20 (DMC P/N: DAK95-20, or similar)
- Extraction: MS27495R20 (DMC P/N: DRK95-20, or similar)

High density size 22 contacts:

- Insertion: MS27495A22 (DMC P/N: DAK95-22, or similar)
- Extraction: MS27495R22 (DMC P/N: DRK95-22, or similar)

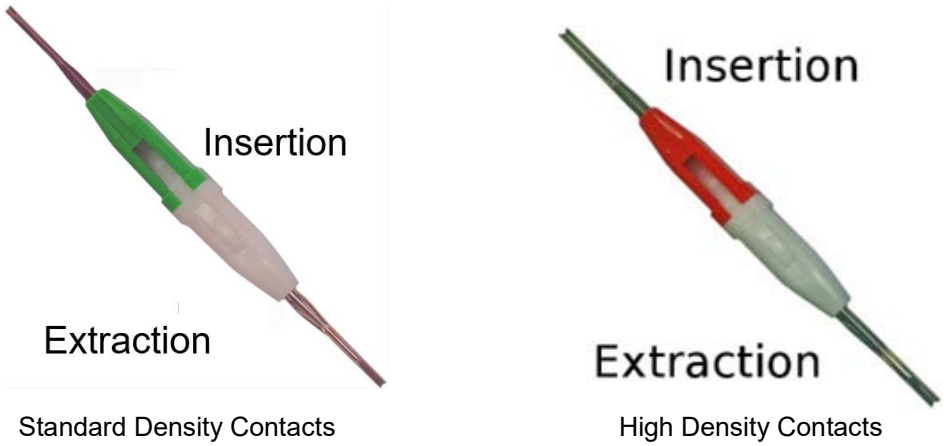

Standard Density Contacts High Density Contacts

Figure 3-32 Insertion/Extraction Tools

Figure 3-33 Tweezer-Type Extractor Tool

3.3.4.6 Tools for Heating

Soldering Iron

Ensure the soldering iron has the ability to set and maintain a temperature of 650°F–700°F. Recommended solder is 63/37 or 60/40 solder (Kester #44 or similar).

Other recommendations:

- RMA flux (Kester #186 or similar)
- Isopropyl alcohol
- Acid brush
- Clamp stand

Figure 3-34 Soldering Equipment Examples

Heat Gun

A heat gun is required to set the heat-shrink used in avionics installation. Solder splices (like those used for shield drains) also require the use of a heat gun.

Recommendations:

- A heat gun that has tip attachments that can be used to redirect the airflow
- A heat gun with multiple heat settings

Figure 3-35 Cordless Heat Gun with Tip Attachments

3.3.4.7 Tools For Labeling

Label Maker

Two options for labeling wires in avionics installation:

1. Heat-shrink label maker that allows printing of text directly onto a piece of heat-shrink.
2. A traditional label maker prints text onto a piece of adhesive-backed paper and then covered with a clear piece of heat-shrink tubing.

3.4 Electrical Considerations

CAUTION

To avoid damage to the LRUs, take precautions to prevent Electro-Static Discharge (ESD) when handling connectors and associated wiring. ESD damage can be prevented by touching an object that is of the same electrical potential as the LRU before handling the LRU itself.

This section presents information required for planning the electrical layout of the AXIS flight display installation.

3.4.1 LRU Power Requirements

All AXIS flight display system LRUs are capable of operating at either 14 or 28 VDC (except the GAD 27 which is 14 VDC only, and the GAP 26). Table 3-14 lists supply voltage and current draw info for the AXIS flight display system LRUs. Use this information when determining power supply requirements. All iInstalled electrical appliances must be considered when determining total power requirements.

Table 3-14 GDU 116 - J1012 Connector (5A Pins) Current Draw

LRU	J1012 (5A Pins) Current Draw			
	14V System		28V System	
	Typical [1] [3]	**Max** [2] [3]	**Typical** [1] [3]	**Max** [2] [3]
GDU 116B	1.60 A	4.40 A	0.82 A	2.20 A
GDU 116C / 116NC	1.82 A	4.60 A	0.92 A	2.30 A

Table 3-15 LRU Current Draw

LRU	Current Draw – Amps			
	14V System		28V System	
	Typical	Max	Typical	Max
GAD 27	0.20 A	0.20 A	N/A	N/A
GAD 29	0.10 A	0.20 A	0.10 A	0.10 A
GDL 52R	0.20 A	0.30 A	0.10 A	0.20 A
GDU 116B (Base) [1] [2]	1.60 A	4.90 A	0.82 A	2.45 A
GDU 116C (COM) [1] [2]	2.88 A	10.15 A	1.47 A	4.98 A
GDU 116NC (NAV/COM) [1] [2]	3.08 A	10.35 A	1.57 A	5.08 A
GEA 110	0.30 A	0.60 A	0.15 A	0.30 A
GEA 24(B)	0.20 A	0.40 A	0.10 A	0.20 A
GHA 15	0.272 A	0.350 A	0.139 A	0.175 A
GI 260	0.40 A	0.40 A	0.20 A	0.20 A
GMA 245/245R/245RM	0.32 A	1.11 A	0.18 A	0.87 A
GMC 507	0.20 A	0.20 A	0.11 A	0.11 A
GSA 28 [3]	0.36 A	1.80 A	0.20 A	0.90 A

LRU	Current Draw – Amps			
	14V System		28V System	
	Typical	Max	Typical	Max
GSU 25D, GMU 11, GTP 59	0.25 A	0.35 A	0.13 A	0.18 A
GSU 75, GMU 44(B), GTP 59	0.76 A	0.96 A	0.38 A	0.48 A
GTR 20/200B	3.00 A	7.50 A	1.40 A	3.75 A
GTR 205R(x)	0.63 A	3.35 A	0.33 A	1.61 A

[1] Per-connector current draw for GDU 116 units for breaker sizing and electrical system design is provided in section 3.4.2.5. Typical amperages are measured with 50% backlighting and are based on listed maximums and common duty cycles. Max display amperages measured with 100% backlighting.

[2] Typical amperage is measured with 50% backlighting and reflects listed maximum values under common duty cycles. Maximum amperage is measured with 100% backlighting, 27 W charging, and COM transmit (if applicable).

[3] Add 1 A to maximum current draw if GSA 28 is connected to a 1 A trim motor at full load.

3.4.2 GDU Power Requirements

Power inputs can be found on multiple connectors on GDU 116( ).

The main 50-pin connector (J1012) has four main power inputs. This connector is present on all display variants. All four power and ground connections should be connected to the aircraft electrical system. It is acceptable to use one of these power inputs for a connection to a backup battery, if equipped.

COM and NAV/COM display variants include an additional 50-pin connector (J1015) dedicated to COM, NAV/COM and audio panel functions, as applicable. This connector includes three dedicated power inputs to provide power for these functions. All three are required to be connected.

J1011 includes an optional power output to a connected GEA 24 or GSU 25. While this is an option, it is generally recommended to provide an independent power connection to the unit, rather than use the pass through function of the display.

3.4.2.1 USB-C Charging

A USB-C port on the bezel of GDU 116( ) provides up to 27 W of power for device charging when 11V or greater is detected on at least two power input pins of the GDU 116 J1012 connector.

3.4.2.2 Display Lighting

Lighting on the AXIS flight display/bezel keys can be controlled either by the built-in photocell light sensor or by configuring an optional lighting bus. When a lighting bus is used, the display can be configured to revert to photocell-based control if the lighting bus input voltage falls below a specified level. Refer to section 5.7.4.2 for details on lighting bus configuration.

3.4.2.3 Battery Backup Support

AXIS flight displays are compatible with the same TCW Integrated Backup Battery Systems (IBBS) employed in many current G3X Touch installations.

27 W USB-C charging significantly increases the power requirements of the display. For installations using IBBS backup batteries, it is recommended to connect only one J1012 power input to the IBBS battery. This will ensure minimal charging occurs while operating on backup battery only, minimizing the consumption of backup battery power by non-critical equipment.

3.4.2.4 Remote Wake Power Input

A connection to the AXIS flight display can be made to provision for future updates to support remote connectivity and database updates, by providing a power input to the AXIS GDU through the positive battery terminal, hot side of master solenoid, or always-hot battery bus. Current draw for this input is less than 42 uA at 12 V while idle. When remote wakeup is active, the display draws 0.85A.

It is suggested that this connection be switched from the cockpit, to allow disconnecting this path when the aircraft will be idle for long periods of time. Refer to section A.1.5.9.1.

Refer to figure B-9.19 for assembly of 330-01791-10 fuse holder. Locate fuse holder as close as possible to connection at positive battery terminal, hot side of master solenoid, or always-hot battery bus.

3.4.2.5 GDU 116 Power Consumption by Connector

Depending on your GDU 116 unit, power consumption varies by connector:

- Power input on the *J1012* connector supports base system functionality to include computing GPS position, normal function processing, USB-C charging, and display backlight. Applies to GDU 116( ). Current draw varies based on USB-C charging and display backlight setting.
- Power input on the *J1015* connector supports audio panel functionality as well as VHF COM function which applies to GDU 116C and GDU 116NC, and VHF NAV function which applies to GDU 116NC. Current draw varies based on COM transmission state.
- Power input on the *J1011* connector can be wired for optional remote wake-up for database loading when connected to a suitable WiFi connection.

Table 3-16 GDU 116 - J1012 Connector (5A Pins) Current Draw

LRU	J1012 (5A Pins) Current Draw			
	14V System		28V System	
	Typical [1] [3]	**Max** [2] [3]	**Typical** [1] [3]	**Max** [2] [3]
GDU 116B	1.60 A	4.40 A	0.82 A	2.20 A
GDU 116C / 116NC	1.82 A	4.60 A	0.92 A	2.30 A

[1] *Typical* current values are measured with 50% display backlighting (BL) and no USB charging load.
[2] *Max* current occurs from 100% display backlighting (BL) with maximum USB-C charging load (27 W).
[3] Add 0.4 A if powering a GEA 24 through J1011, and add 0.2 A if powering a GSU 25 through J1011.

Table 3-17 GDU 116 - J1015 Connector (3A Pins) Current Draw

LRU	J1015 (3A Pins) Current Draw			
	14V System		28V System	
	Typical	**Max** [1]	**Typical**	**Max** [1]
GDU 116C	1.06 A	5.05 A	0.55 A	2.43 A
GDU 116NC	1.26 A	5.25 A	0.65 A	2.53 A

[1] *Max* current occurs during COM transmission.

Table 3-18 GDU 116 - J1011 Connector (5A Pins) Current Draw

LRU	J1011 (5A Pins) Current Draw	
	14V System	28V System
GDU 116B	0.85 A [1]	0.43 A
GDU 116C / 116NC	0.85 A [1]	0.43 A

[1] Current draw while remote wakeup is active.

3.4.3 GAP 26 Power Requirements

The P/N 010-01074-00 version of the GAP 26 does not require power as it does not have a heater. The initial current vs temperature requirements for the P/N 010-01074-10 and P/N 010-01074-20 are listed in table 3-19. Refer to section 5.5.2.2.8.1 for acceptable wiring configurations.Do not connect the heated/regulated version of the GAP 26 (P/N 010-01074-20) to 28 VDC. The heated/non-regulated version of the GAP 26 (P/N 010-01074-10) may be connected to either 14V or 28V. Refer to section 4.4.13 for wiring information.

This table refers to probe temperature at initial turn-on. For example, upon turn-on at -40°C, the standard (-10) or regulated (-20) heated probes will initially draw 12 amps, but will draw less current as they warm up.

The -10 non-regulated probe draws current proportional to the probe temperature as shown above.

The -20 heated regulated probe uses similar power to the -10 probe when airborne, but will limit the current to regulate the probe temperature to ~75°C (167°F) when the probe temperature reaches this value.

Table 3-19 Probe Temperatures

Probe Temperature	-40°C (-40°F)	0°C (32°F)	50°C (122°F)	100°C (212°F)	175°C (347°F)
Amps	12 Amp	9.25 Amp	7.3 Amp	5.85 Amp	4.36 Amp

4 INSTALLATION

4.1 LRU Installation and Wiring Harness Fabrication 4-2
4.1.1 Wiring Harness Installation 4-2
4.1.2 Wire Routing and Installation 4-3
4.1.3 Shielded Cable Preparation 4-4
4.2 Pitot-Static Routing 4-6
4.3 Backshell Assembly 4-8
4.3.1 Jackscrew Backshell Assembly 4-8
4.3.2 Backshell with Hardware Assembly 4-11
4.3.3 Configuration Module Installation 4-14
4.3.4 GMU 44(B) Connector Assembly and Shield Termination 4-17
4.3.5 GHA 15 Connector 4-20
4.3.6 ID Program Pins (Strapping) 4-23
4.3.7 Splicing Signal Wires 4-24
4.4 AXIS Display and Remote LRU Installations 4-25
4.4.1 Remote LRU Installation Considerations 4-25
4.4.2 CAN Status Indicator 4-25
4.4.3 GDU 116, GDU 116C, and GDU 116NC 4-26
4.4.4 GSU 25 B/C/D Air Data, Attitude and Heading Reference System (ADAHRS) Installation 4-39
4.4.5 GTP 59 Outside Air Temperature (OAT) Probe Installation 4-50
4.4.6 GMU 11 Magnetometer Installation 4-55
4.4.7 GMU 22/44(B) Magnetometer Installation 4-63
4.4.8 GEA 24 Engine Indication System Installation 4-76
4.4.9 GMC 507 Autopilot Controller Installation 4-83
4.4.10 GSA 28 Autopilot Servo Installation 4-93
4.4.11 GAD 27 Electrical Control System Installation 4-133
4.4.12 GAD 29B/C/D ARINC 429 Data Link Installation 4-138
4.4.13 GAP 26 Pitot Tube Installation 4-145
4.4.14 GHA 15 Height Advisor Installation 4-164
4.4.15 GI 260 AOA Indicator Display 4-170
4.4.16 GTR 205x COM Radio Installation 4-173
4.4.17 GTR 205R(x) COM Radio Installation 4-173
4.4.18 GEA 110 EIS Installation 4-173
4.4.19 GSU 75 ADAHRS Installation 4-177
4.4.20 GCO 14 Carbon Monoxide Detector 4-180
4.4.21 Antenna Installation 4-184
4.4.22 Engine/Airframe Sensor Installation 4-230

4.1 LRU Installation and Wiring Harness Fabrication

AXIS system installation requires constructing electrical wire harnesses.

Incorporate the general wiring and instillation guidance provided in section 4.1 through section 4.3 of this chapter, with the dedicated LRU installation information found in section 4.4, to install the LRUs in the aircraft and fabricate the necessary wiring harness. This will require close cross referencing of the following sections of this manual:

- Appendix A contains specific electrical characteristics of each pin of each LRU.
- Appendix B contains interconnect drawings for all required/optional LRUs and sensors.

CAUTION

Check wiring connections for errors before connecting any wiring harnesses. Incorrect wiring could cause internal component damage.

NOTE

Install LRUs/sensors before constructing the wiring harnesses and cables.

4.1.1 Wiring Harness Installation

The installation kits for the GDU 116( ) and associated system LRUs include connectors and crimp contacts.

For power and ground, use the wire gauge specified in the drawing and 22 AWG for the short length from the splice to the connector. Once the wire harness assemblies have been made, use anti-chafe tape and attach the backshell/connector to the rear of the mounting unit. Route the wire harness as appropriate. Avoid sharp bends that may damage the wire harness.

General steps in constructing the wiring harness:

1. Strip approximately 0.17 inches of insulation from all wires going to connectors. It is the responsibility of the installer to determine the proper length of insulation to be removed. Wire must be visible in the inspection hole after crimping and the insulation must be 1/64 – 1/32 inches from the end of the contact as shown in figure 4-1.
2. Insert the wire into the pin and crimp with one of the recommended (or equivalent) crimping tools.
3. Insert the pin into the connector housing location as specified by the interconnect drawing in appendix B.
4. Verify the pin is properly engaged into the connector by gently tugging on the wire.

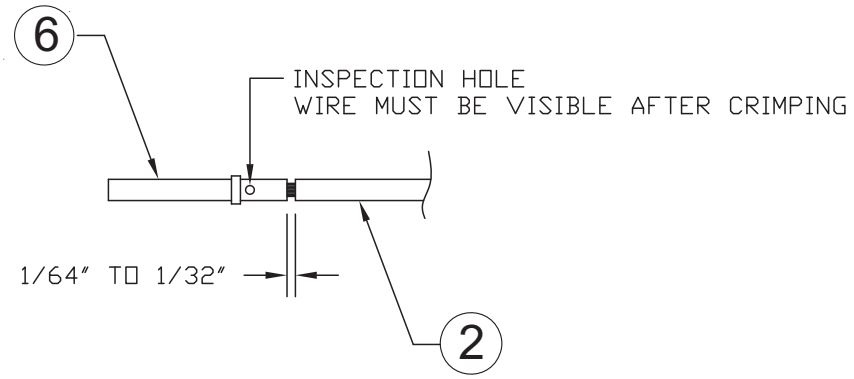

Figure 4-1 Insulation/Contact Clearance

4.1.2 Wire Routing and Installation

This section includes general wiring considerations. The installer supplies and fabricates all of the cables. Required connectors, pins, etc., are provided with LRU installation kits.

Use MIL-W-22759/16 (or other approved wire) AWG #22 or larger wire for all connections unless otherwise specified. The supplied standard pin contacts are compatible with up to AWG #22 wire. In cases where some installations have more than one LRU sharing a common circuit breaker, sizing and wire gauge is based on aircraft circuit breaker layout, length of wiring, current draw on units, and internal unit protection characteristics.

- Use MIL-C-27500 (or other approved cable) for all shielded cable connections unless otherwise specified.
- HSDB connections should use preferred aviation grade Category 5 Ethernet cable listed in table 3-8.
- RG-400 or RG-142 coaxial cable with 50 Ω nominal impedance and meeting applicable aviation regulations should be used for the installation.
- For dual GDU 116 installations, route the cable harnesses separately.

When fabricating and installing each harness:

- Reference methods, techniques, and practices defined in AC 43.13-1B Chapter 11, Aircraft Electrical Systems for guidance on wire type, gauge, routing, and wire identification.
- Label all wires and connectors in a durable manner to facilitate future maintenance, troubleshooting and installation updates.
- All cable routing should be kept as short and as direct as possible.
- Check there is ample space for the cabling and mating connectors.
- Avoid sharp bends in cabling.
- Avoid routing near aircraft control cables.
- Avoid routing cables near heat sources, RF sources, EMI interference sources, power sources (e.g., 400 Hz generators, trim motors, etc.) or near power for fluorescent lighting.
- Route the GPS antenna cable as far as possible away from all COM transceivers and antenna cables.
- Analog input wires routed too close to spark plugs, plug wires, or magnetos may result in erratic readings.
- Ensure the wiring does not contact sources of heat or RF/EMI interference (power sources) and is not routed near moving components of aircraft controls or other systems. Wire routing must preclude accidental impact or damage.
- Provide adequate space for the LRU or sensor connector(s). Include additional wire length to create a service loop for maintenance, where appropriate.
- Care must be taken to adequately support and protect cable harnesses from chafing.
- Shield terminations should be as short as possible, not to exceed 3.0" unless otherwise specified. Shields may be connected to the metal connector backshell when the backshell is grounded to the airframe chassis ground, unless otherwise specified by equipment manufacturer.
- Wiring from the pilot AXIS flight display system and the electronic standby instruments should be routed independently and ideally independent from the copilot AXIS flight display system.
- GEA wiring should be routed on the lower part of the instrument panel area, away from any windows. The pilot and copilot AXIS flight display systems should not share any circuit breakers or ground returns. The standby instruments should not share any circuit breakers or ground returns with either AXIS flight display system.
- Intermediate connections must be minimized to maintain certified electromagnetic compatibility. All shields must have continuity at intermediate connections (e.g., bulkhead connectors, terminal blocks, splices, etc.). If intermediate connectors are installed, unless otherwise specified, the shield must be terminated at both sides of the intermediate connector backshells.

4.1.3 Shielded Cable Preparation

Prepare all of the shielded cables as shown in figure 4-1. When terminating shield drains, a maximum of two shields can be daisy-chained together. The daisy-chaining method may only be used if the six tapped holes in the shield block are insufficient to ground all shields. Refer to figure 4-2.

1. At the end of the shielded cable, strip back a 2.5-inch maximum length of the jacket to expose the braid.
2. Remove this exposed braid.
3. Carefully score the jacket 1/4 to 5/16 inches from the end and remove the jacket to leave the braid exposed.

NOTE

Solder sleeves with pre-installed shield drains may be used instead of separate shield terminators and individual wires.

4. Connect a 20 or 22 AWG wire to the exposed shield of the prepared cable assembly. Refer to figure 4-2. Refer to AC 43.13 for termination techniques.

NOTE

Solder sleeves with pre-installed lead: A preferred solder sleeve is the Raychem S03 Series with the thermochromic temperature indicator. These solder sleeves come with a preinstalled lead. For detailed instructions on product use, refer to Raychem installation procedure.

5. Slide a shield terminator onto the prepared cable assembly.
6. Connect the shield wire to the shield using a heat gun approved for use with solder sleeves. The chosen size of solder sleeve must accommodate both the number of conductors present in the cable and the shield wire to be attached.
7. Crimp contacts onto the cable wires.
8. Repeat steps 1 through 7 as needed for the remaining shielded cables.
9. Wrap the cable bundle with silicone fusion tape or equivalent at the point where the backshell strain relief and cast housing will contact the cable bundle.
10. Install a ring terminal onto the cable shield termination wires, grouping wires as applicable for the connector.

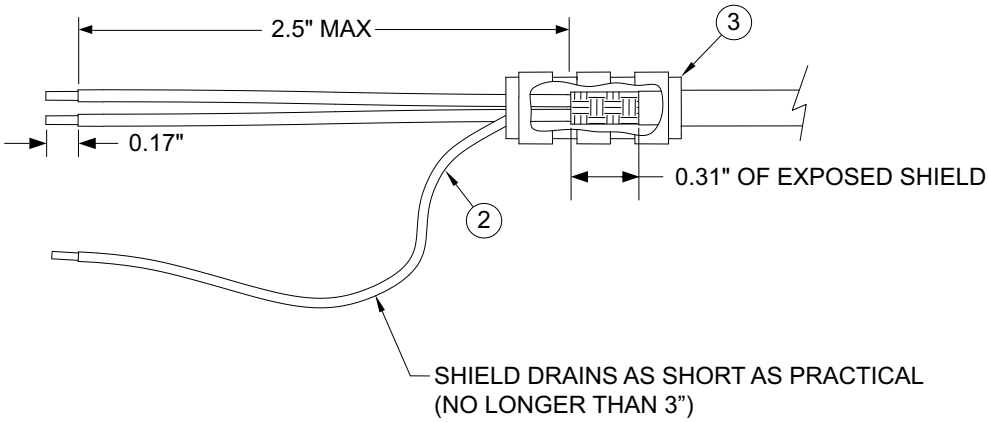

PREFERRED METHOD

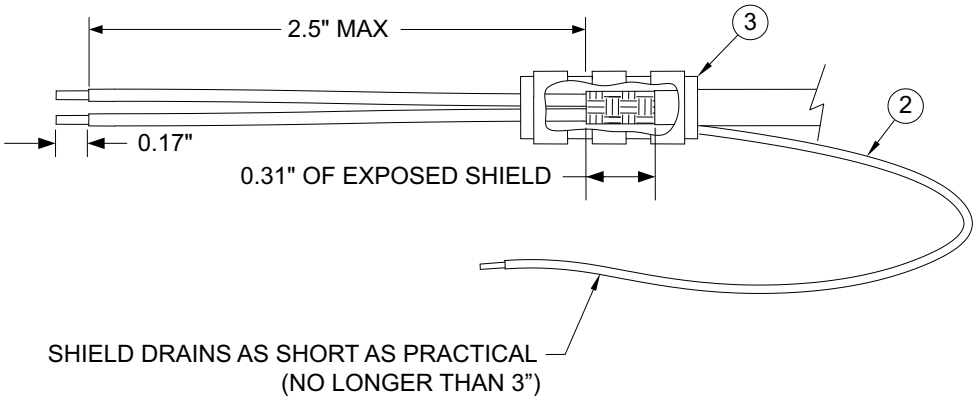

ALTERNATE METHOD

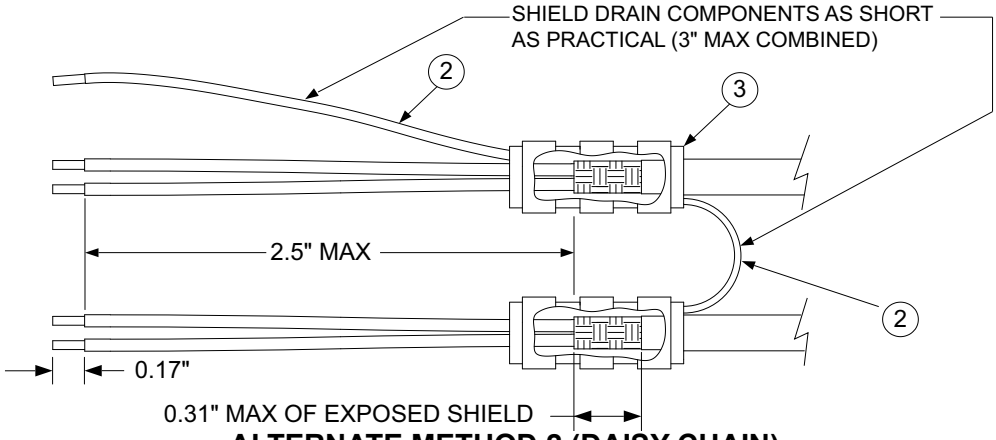

ALTERNATE METHOD 2 (DAISY CHAIN)

Figure 4-2 Shield Termination Methods

4.2 Pitot-Static Routing

CAUTION

Check connections for errors before operating the equipment. An incorrect connection can result in equipment damage.

Selected LRUs and pneumatic standby instruments must be connected to the aircraft Pitot-static system using lines and fittings. Lines should be labeled next to each LRU or instrument. Refer to figure 4-3 and figure 4-4.

When installing pneumatic lines and fittings:

- Determine the hose/connection material that best interfaces with the existing aircraft installation. Reference the appropriate aircraft parts manual to determine the current part numbers associated with the installation of hose and connections used in the Pitot-static system.
- Do not confuse Pitot, static, and AOA (if applicable) plumbing between the ports on the aircraft and the ADAHRS. Use of different colored labels is recommended for Pitot, static, and AOA plumbing to avoid plumbing connection errors.
- Reference the aircraft manufacturer standard practices manual or equipment manufacturer documentation for guidance. Methods, techniques, and practices defined in AC 43.13-1B Chapter 12, Section 4 *Pitot/Static Systems* are acceptable.
- Do not route lines near moving components of the aircraft control systems, other systems with moving components, or sources of heat including high temperature lines.
- Connected equipment must not be at the lowest point in the system to prevent moisture or debris collection.
- Adequate positive drainage of moisture must be maintained for the installation of the Pitot and static lines, so that moisture cannot accumulate resulting in a blockage of the system. Ensure lines are free from fluids and other contaminants. For existing systems, a review of the system and lines must be conducted to ensure positive drainage.
- Ensure that no deformations of the airframe surface have been made that would affect the relationship between static air pressure and true ambient static air pressure for any flight condition.
- The performance of existing drains must remain unaffected by connected equipment.
- Pitot and static ports mounted on the aircraft surface must not be changed or relocated. The aircraft surface where these ports are located must remain undeformed and free from defects.

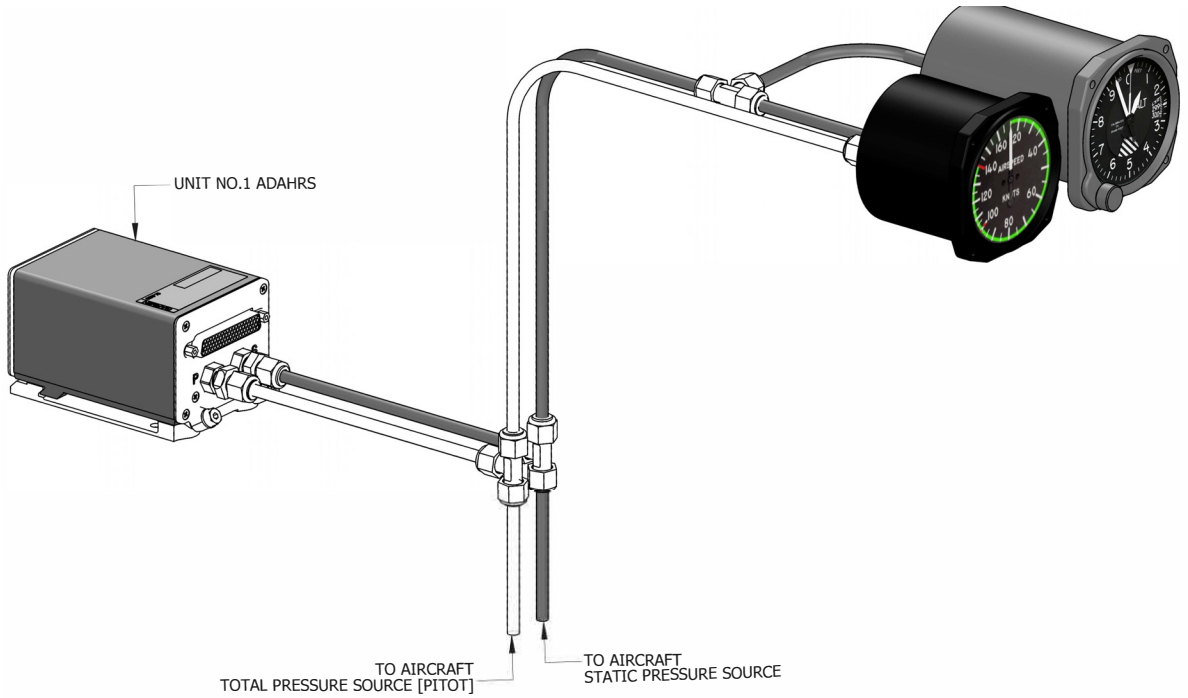

Figure 4-3 Pitot-Static Connections for Single ADAHRS Installation

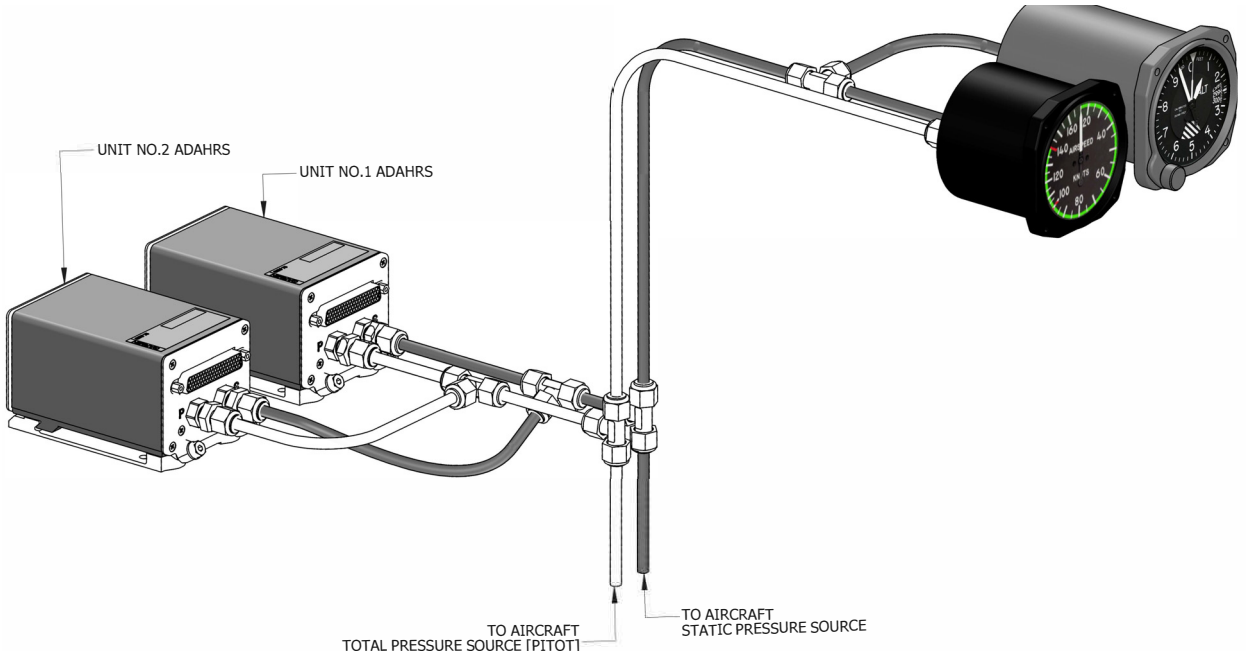

Figure 4-4 Pitot-Static Connections for Dual ADAHRS Installation (Aircraft with a Single Pitot-Static System)

4.3 Backshell Assembly

NOTE

Make sure that backshell connectors are fully tightened. Loose connectors may cause vibration-related performance issues that are difficult to troubleshoot.

Connector kits listed in table 4-12 and table 4-13 include Garmin backshell and ground adapter assemblies. Ground adapter assemblies are not required for all Garmin LRUs and are not included in all LRU connector kits. Backshell connectors allow the installer to terminate shield grounds at the backshell housing using the shield block ground kit.

There are two types of backshells for AXIS flight display system LRUs: jackscrew backshell and backshell with hardware.

4.3.1 Jackscrew Backshell Assembly

NOTE

When connecting a jackscrew backshell to an LRU, torque the jackscrews 5 to 6 in-lb.

Prepare the shielded cables to be connected to the LRU in accordance with section 4.1.3, then terminate the cables to the LRU jackscrew backshell assembly using the following procedure. Refer to figure 4-5 and figure 4-6 during this procedure.

1. Terminate the crimped pin/socket contacts (4) in the D-sub connector (8) in accordance with the aircraft wiring drawings.
2. Place the smooth side of the backshell strain relief clamp (9) across the cable bundle and secure using three 4-40 x 0.375 pan head screws (10).

CAUTION

Place smooth side of strain relief (9) across cable bundle. DO NOT place grooved side across cable bundle. Placing the grooved side of the strain relief across the cable bundle may damage wires.

3. Terminate the ring terminals (6) to the tapped holes on the backshell (8) by placing items on the 8-32 x 0.312 pan head shield terminal screw (13) in the following order before finally inserting the screw into the tapped holes on the shield block:
   a. split washer (14)
   b. flat washer (15)
   c. first ring terminal (6)
   d. second ring terminal (6) (if needed)

NOTE

Each tapped hole on the backshell (8) may accommodate only two ring terminals (6). It is preferred that a maximum of two wires (3) be terminated per ring terminal. Two wires per ring terminal will necessitate the use of a ring terminal, #8, insulated, 14-16 AWG (MS25036-153). If only a single wire is left or if only a single wire is needed for this connector a ring terminal, #8, insulated, 18-22 AWG (MS25036-149) can accommodate this single wire. If more wires exist for the connector than two per ring terminal, it is permissible to terminate three wires per ring terminal.

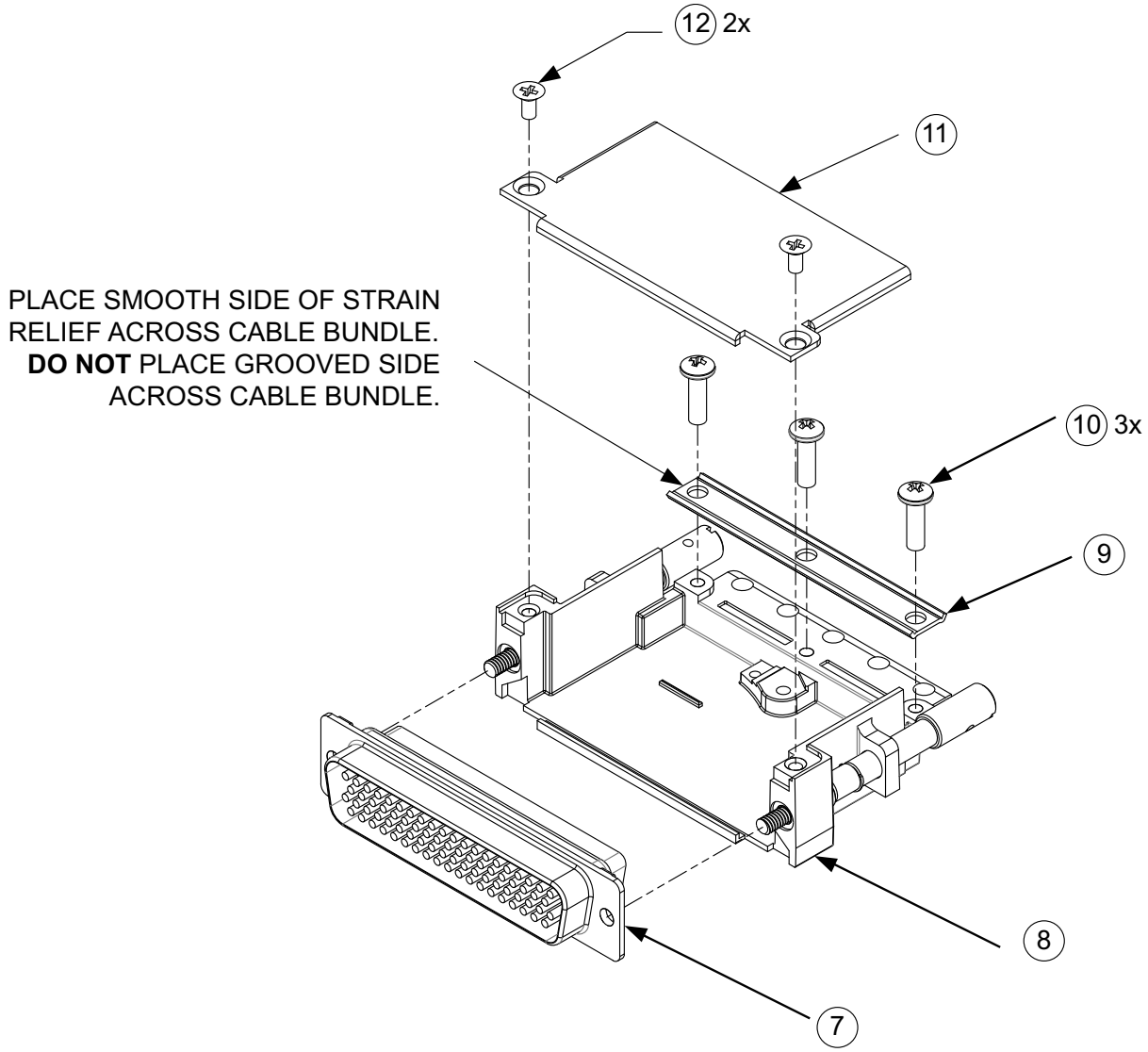

Figure 4-5 Jackscrew Backshell and Shield Block Assembly

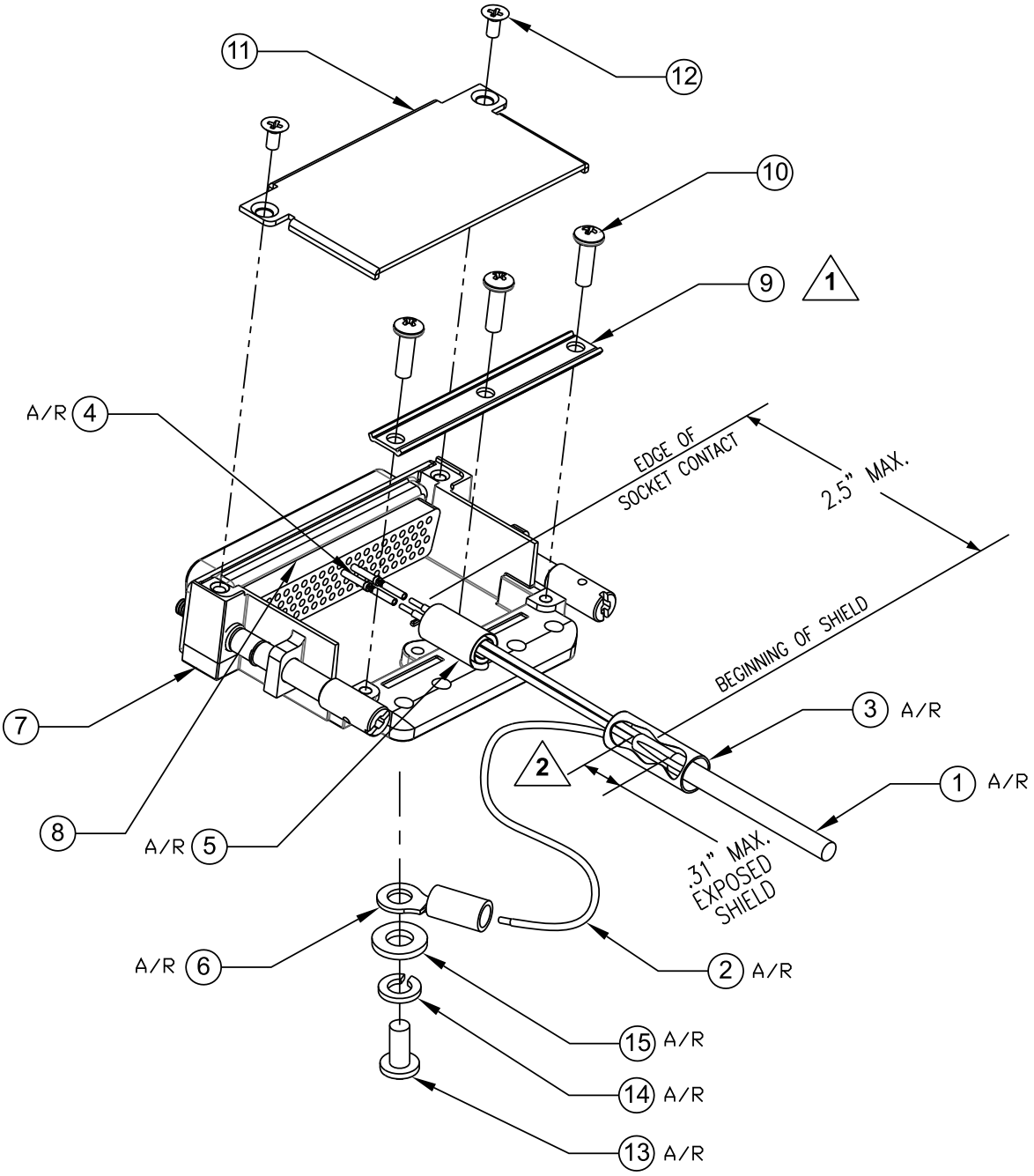

NOTES

1. PLACE SMOOTH SIDE OF STRAIN RELIEF ACROSS CABLE BUNDLE. DO NOT PLACE GROOVED SIDE ACROSS CABLE BUNDLE.

2. PREFERRED SHIELD TERMINATION METHOD SHOWN.

Figure 4-6 Shield Block Termination on Jackscrew Backshell Assembly

4.3.2 Backshell with Hardware Assembly

Prepare the shielded cables to be connected to the LRU in accordance with section 4.1.3, then terminate the cables to the LRU backshell with hardware assembly using the following procedure. Refer to figure 4-8 during this procedure.

1. Attach the shield block (2) to the backshell (1) by inserting the 4-40 x 0.250 flat head screws (3) through the holes on the shield block and threading into the tapped holes on the backshell (1).
2. Attach the D-sub connector (11) to the backshell (8) by inserting two pan head screws (3) through the holes on the connector and threading into the tapped holes on the backshell (1).
3. Terminate the cable bundle contacts (14) in the D-sub connector (10) in accordance with the aircraft wiring drawings.
4. Place the convex side of the backshell strain relief clamp (7) across the cable bundle and secure using three 4-40 x 0.375 pan head screws (6).

CAUTION

Place smooth side of strain relief (7) across cable bundle. DO NOT place grooved side across cable bundle. Placing the grooved side of the strain relief across the cable bundle may damage wires.

5. Attach the backshell cover (11) to the backshell using two 4-40 x 0.187 countersunk screws (9).
6. Terminate the ring terminals (15) to the shield block (2) by placing items on the pan head shield terminal screw (16) in the following order before finally inserting the screw into the tapped holes on the shield block:
   a. split washer (17)
   b. flat washer (18)
   c. first ring terminal (15)
   d. second ring terminal (if needed)

NOTE

Each tapped hole on the shield block (2) may accommodate only two ring terminals (15). It is preferred that a maximum of two wires (13) be terminated per ring terminal. Two wires per ring terminal will necessitate the use of a ring terminal, #8, insulated, 14-16 AWG (MS25036-153). If only a single wire (13) is left or if only a single wire is needed for this connector a ring terminal, #8, insulated, 18-22 AWG (MS25036-149) can accommodate this single wire. If more wires exist for the connector than two per ring terminal (15), it is permissible to terminate three wires (13) per ring terminal.

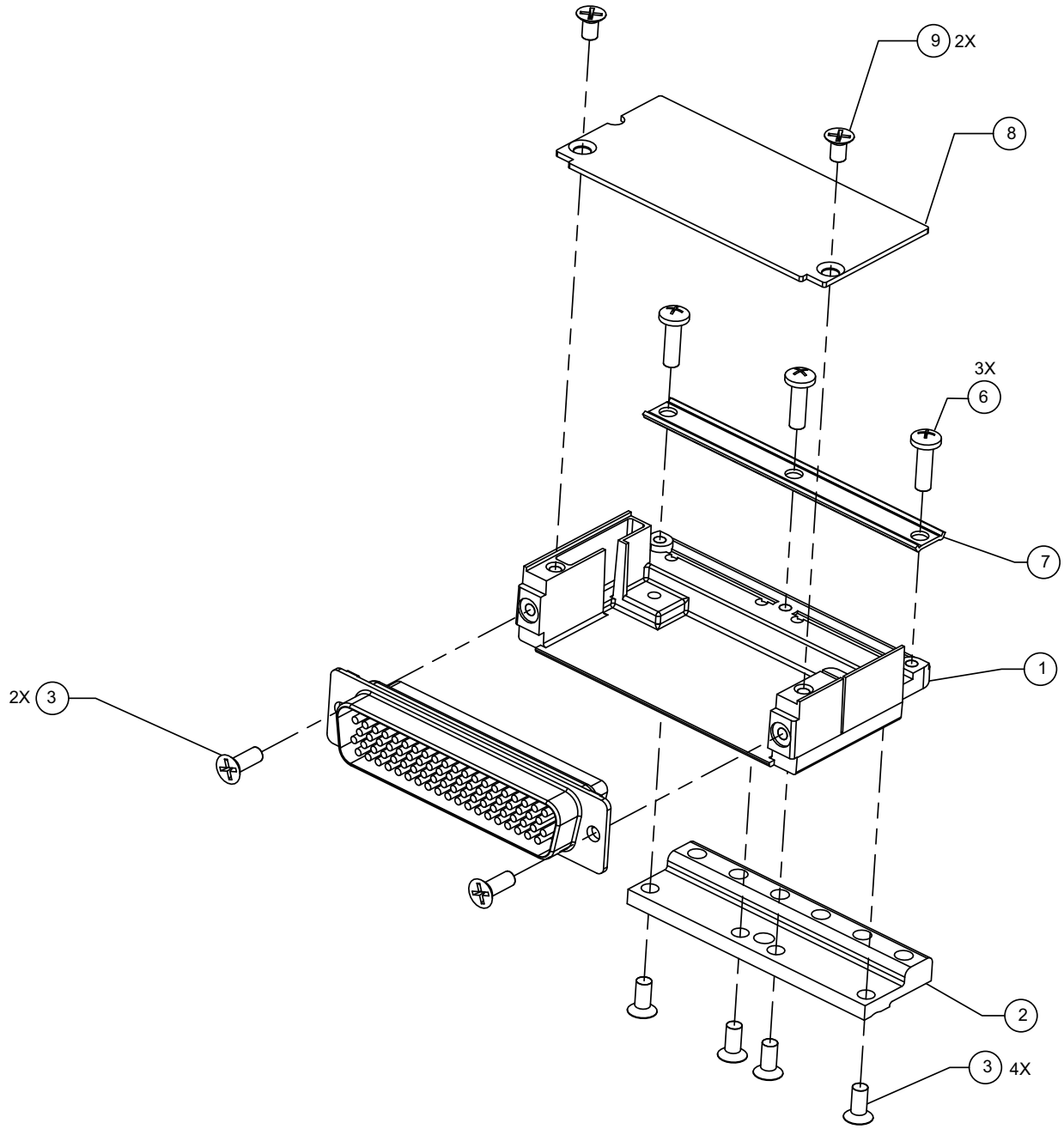

Figure 4-7 Backshell with Hardware and Shield Block Assembly

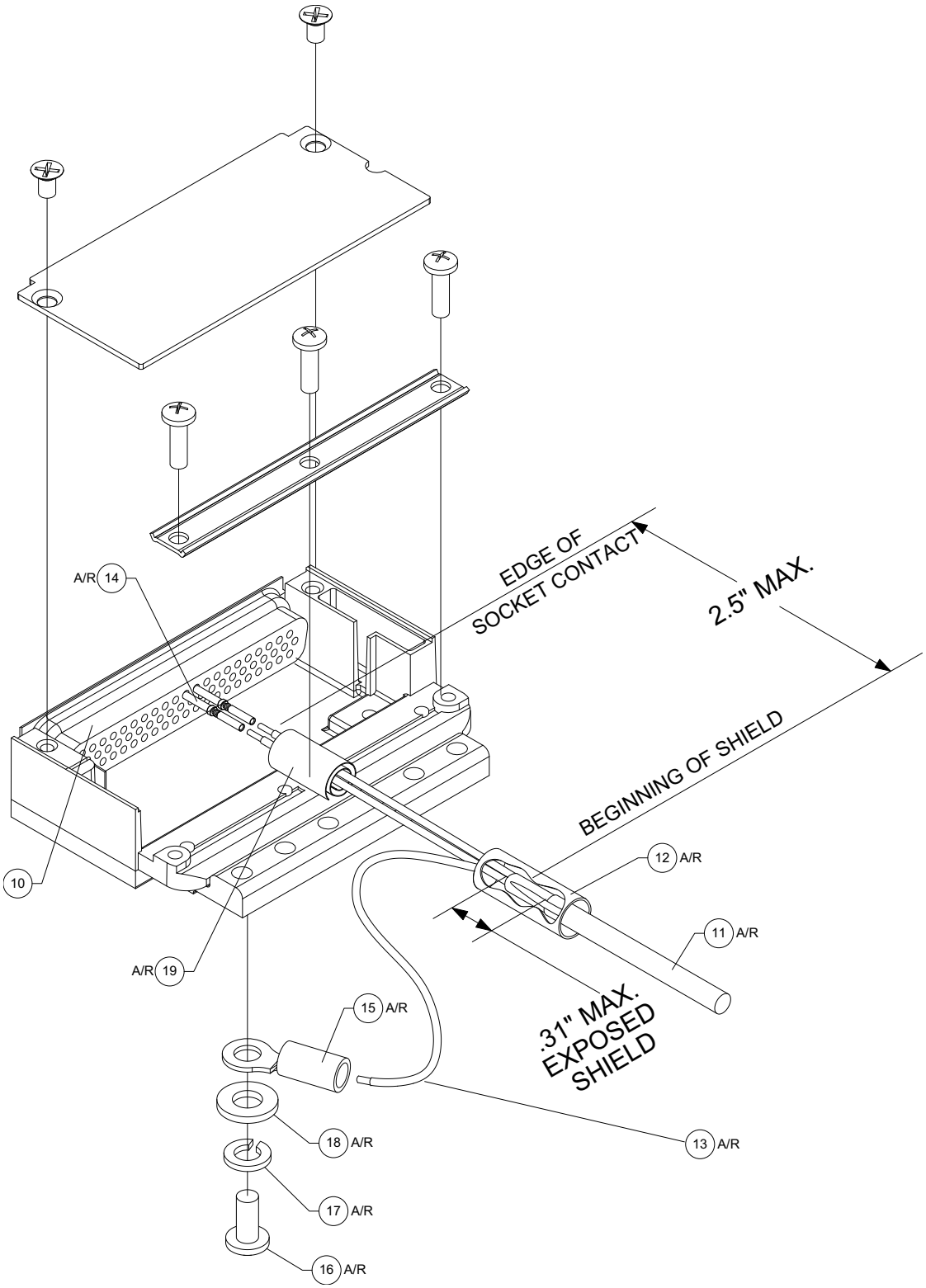

Figure 4-8 Shield Termination on Backshell with Hardware Assembly

4.3.3 Configuration Module Installation

LRU backshell assemblies serve as housing for configuration modules. This section lists configuration module assemblies and installation procedures for new and existing installations.

NOTE

The socket contacts supplied with the configuration module are specifically made to accommodate 28 AWG wire. Ensure the crimp tool is set to the proper crimp tension when crimping these contacts to the configuration module harness.

4.3.3.1 Configuration Module Installation Without GCO 14

Use the following procedure when installing the configuration module for a GEA 110, GSU 75, and AXIS flight display without the optional GCO 14. Refer to section 4.3.3.2 or section 4.4.3.3 for GCO 14 installation instructions.

Refer to figure 4-9 for details and item numbers referenced in the following procedure.

1. Strip back approximately 0.17 inches of insulation from each wire of the 4-conductor wire harness (3). It is the responsibility of the installer to determine the proper length of insulation to be removed.
2. Crimp a pin (4) to each conductor.
3. Ensure that the wire is visible in the inspection hole, and that the insulation is 1/64 to 1/32 inches from the end of the contact.
4. Insert newly crimped pins and wires (3, 4) into the connector housing (5) location. For details, refer to the applicable interconnect drawings.
5. Attach the module (1) to the backshell (6) using a pan head screw (10).
6. Plug the 4-conductor wire harness (3) into the connector on the module (1).
7. Point the connector housing (5) so that the 4-conductor wire harness (3) is on the same side of the backshell (6) as the module (1).
8. Attach the cover (7) to the backshell (6) using two screws (8).

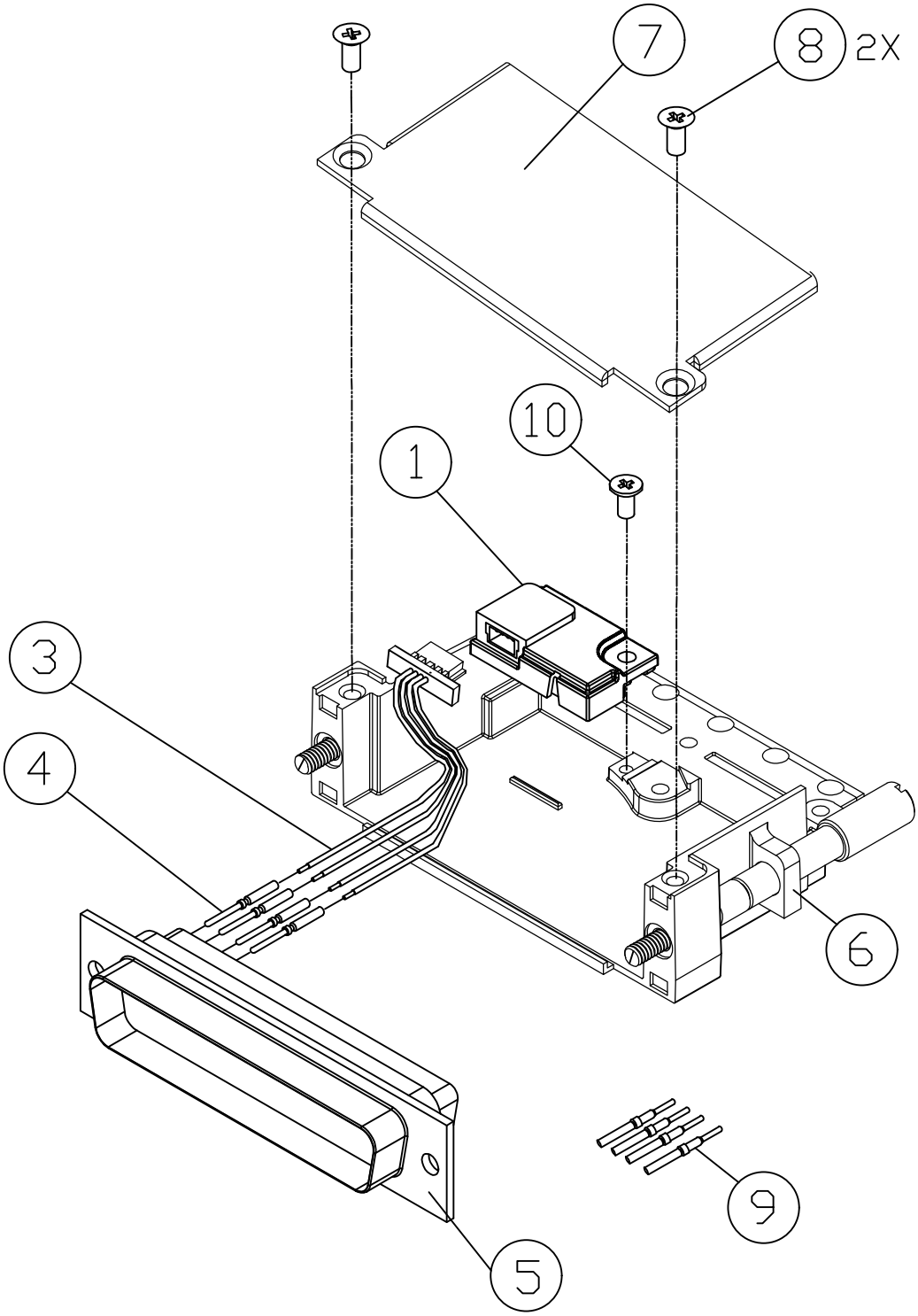

Figure 4-9 Configuration Module Assembly without GCO 14 (Potted Configuration Module)

4.3.3.2 Configuration Module Installation with GCO 14 in Existing AXIS Installation

When connecting a new GCO 14 to a previously installed AXIS flight display, the configuration module wiring must first be removed with the following procedure:

1. Ensure the configuration is saved per section 5.9.3.1 in case of configuration module damage.
2. Ensure the AXIS flight display is powered off.
3. Disconnect the J1012 connector from the display.
4. Remove the backshell connector cover (7) by removing the two screws (8).
5. Remove the retaining screw (10) and extract the configuration module (1) from the backshell (6).
6. Disconnect the 4-conductor wire harness (3) from the configuration module.
7. Remove the four pins (4) from the connector housing (5).

To prepare the cable harness (figure 4-123) for crimp pin installation:

1. Strip at least 0.17 inches of insulation from all wires going to connectors. It is the responsibility of the installer to determine the proper length of insulation to be removed.
2. Insert the wire into the supplied pin and crimp with one of the recommended (or equivalent) crimping tools listed in table 3-10.
3. Insert the pins into the J1012 connector housing location as specified in figure B-7.5.
4. Install ring terminals, #8, insulated, onto the shield drain wires, grouping wires as appropriate for the connector.
5. Secure ring terminals with two screws, 8-32 (drain lugs) to shield block.
6. Verify the pins are properly engaged into the connector by gently tugging on the wire.

4.3.4 GMU 44(B) Connector Assembly and Shield Termination

The parts listed in table 4-1 are required for the GMU 44(B) connector harness. Some parts for this installation are included in the GMU 44(B) connector kit and some are to be provided by the installer.

Table 4-1 GMU 44(B) Connector Assembly

Figure Ref	Description	Conn Kit Qty [1]	Part Number
1	Shield termination (method optional)	0	Parts used depend on method chosen
2	Shield extension wire, 1.9 inch length	0	M22759/16-22
3	Shield extension wire, 2.0 inch length	0	M22759/16-22
4	Contact, socket, mil crimp, size 22	6	336-00055-00
5	Connector, receptacle, WTW, D369 series, 6 position, socket insert, key N	1	330-01430-01
6	Strain relief, D369 series, 6 position	1	330-90056-06
7	3-conductor cable	0	M27500-22TE3T14
8	2-conductor cable	0	M27500-22TE2T14
9	Self-clinching plastic cable tie strap	0	AS33671 or similar

Notes:

[1] Quantity included in GMU 44(B) Connector Kit (P/N 011-04205-00).

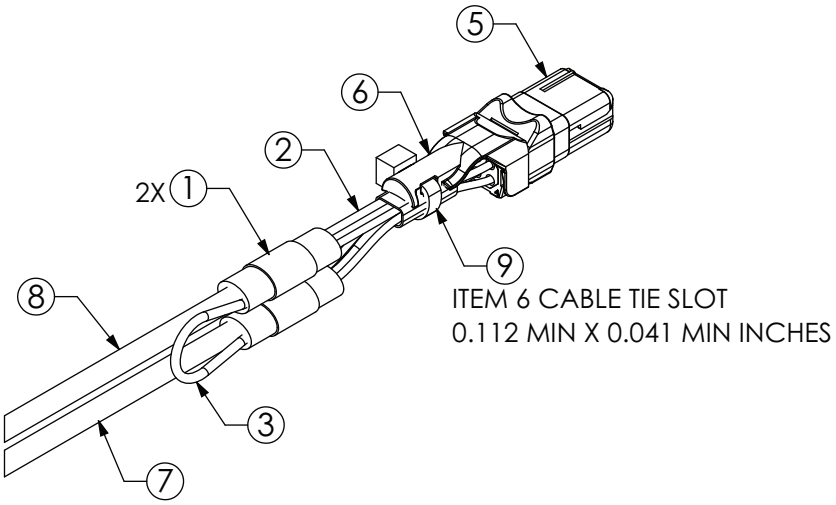

Figure 4-10 GMU 44(B) Connector Harness

1. On one end of each shielded cable (7 and 8), strip back approximately 1.6 inches of jacket to expose the shield. Use caution when cutting the jacket to avoid damaging the individual braids of the shield.
2. Trim away approximately 1.3" of shield, leaving approximately 0.3 inches of shield. Fold this remaining shield back over the jacket.

3. Cut one 22 AWG shield extension wire (2) approximately 1.9 inches long so the end of the shield extension wire lines up with the end of the previously prepared shielded cable (7) from step 1.
4. Strip back approximately 0.25 inches of insulation from one end of the shield extension wire (2).
5. Cut a second 22 AWG shield extension wire (3) approximately 2.0 inches long.
6. Strip back approximately 0.25 inches of insulation from both ends of this shield extension wire (3) to daisy chain the prepared shielded cables (7 and 8).
7. Connect the shield extension wire to the previously prepared shields using an approved shield termination technique. Refer to AC 43-13 for termination techniques.

   Preferred Method:

   a. Slide a solder sleeve onto the prepared cable assembly (1) and shrink using a heat gun. The chosen size of solder sleeve must accommodate the number of conductors present in the cable assembly. (Solder sleeve MIL-specs are M83519/1-2 for 2-conductor and M83519/1-3 for 3-conductor.)

   Secondary Method:

   a. Solder the prepared cable assembly. Ensure a solid electrical connection through the use of acceptable soldering practices.

   b. Slide a piece of shrink tube onto the prepared wire assembly (**1**) and shrink using a heat gun. The chosen size of shrink tube must accommodate the number of conductors present in the cable.

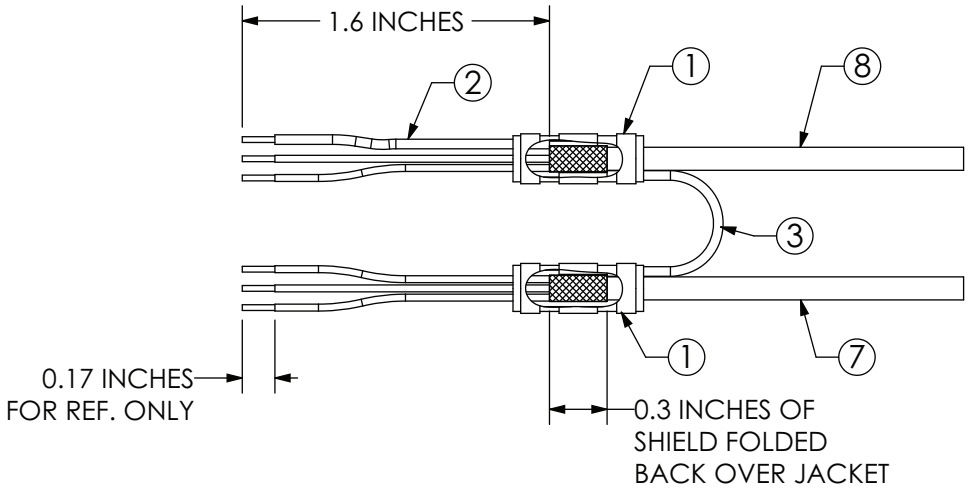

Figure 4-11 GMU 44(B) Shield Termination

8. Strip back approximately 0.17 inches of insulation from each wire of the shielded cables (**7** and **8**) and shield extension wire (**2**).

9. Crimp a socket (4) to each conductor of the shielded cables and shield extension wire. It is the responsibility of the installer to find the proper length of insulation to be removed. Wire must be visible in the inspection hole after crimping and the insulation must be 1/64 to 1/32 inches from the end of the contact as shown in figure 4-12.

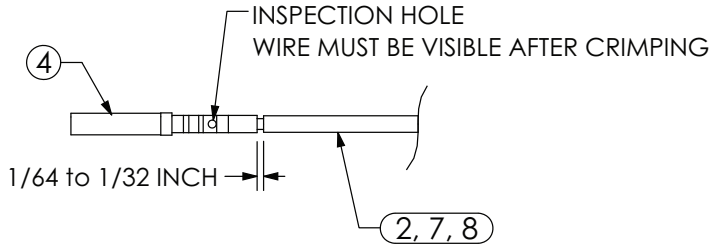

Figure 4-12 GMU 44(B) Connector Insulation/Socket Clearance

10. The 6-pin plastic connector is comprised of a connector (5) and strain relief (6). Insert each crimp socket (4) into the appropriate location inside of the receptacle. Refer to section A.5 for correct pinout of connector.
11. (Optional) It is recommended to wrap the cable bundle with silicone fusion tape (Garmin P/N 249-00114-00, or a similar version). Using this tape is at the discretion of the installer.
12. Snap the strain relief (6) on the connector body (5).
13. Use a cable tie (9) to secure the cables to the strain relief.

4.3.5 GHA 15 Connector

The following table indicates the components for a circular connector using an AS85049/124S saddle clamp strain relief or a AS85049/126S right angle saddle clamp strain relief shown in figure 4-13.

Table 4-2 GHA 15 Connector Components

Figure Ref	Description	GPN, NAS, or military p/n
1 [1]	Circular connector	Reference product installation manual
2 [1]	Contacts (provided with circular connector)	Reference product installation manual
3 [1]	Saddle clamp strain relief (AS85049/124S, self-locking or AS85049/126S right angle, self-locking)	Reference product installation manual
	#4 Captive self-locking nut and #4 screw (connector size 17 and smaller) #6 Captive self-locking nut and #6 screw (connector size 19 thru size 23) #8 Captive self-locking nut and #8 screw (connector size 25)	Parts supplied with strain relief
	Cable clamps	
4	Multiple conductor shielded cable (2 –conductor demonstrated here)	Reference installation wiring diagrams
5	Drain wire shield termination (method optional)	Parts used depend on method chosen
6	Braid, flat (19-20 AWG equivalent, tinned plated copper strands 36 AWG, circular mil area 1000 - 1300)	Parts used depend on method chosen
7	Floating shield termination (method optional)	Parts used depend on method chosen
8	Ring terminal, #4, insulated, 18-22 AWG	MS25036-148
	Ring terminal, #4, insulated, 14-16 AWG (connector size 17 and smaller) or Ring terminal, #6, insulated, 18-22 AWG	MS25036-152 or MS25036-102
	Ring terminal, #6, insulated, 14-16 AWG	MS25036-107
	Ring terminal, #6, insulated, 10-12 AWG (connector size 19 thru size 23) or Ring terminal, #8, insulated, 18-22 AWG	MS25036-111 or MS25036-149
	Ring terminal, #8, insulated, 14-16 AWG	MS25036-153
	Ring terminal, #8, insulated, 10-12 AWG (connector size 25)	MS25036-156

[1] Indicates part is included in Garmin connector kit

Figure Ref	Description	GPN, NAS, or military p/n
9*	Flat washer, stainless, #4, .032” thick, .115”ID, .209”OD (connector size 17 and smaller) Flat washer, stainless, #6, .032” thick, .143”ID, .267”OD (connector size 19 thru size 23) Flat washer, stainless, #8, .032” thick, .169”ID, .304”OD (connector size 25)	NAS620C4 or NAS620C6 or NAS620C8
10	Silicone fusion tape	249-00114-00 or similar
Not Shown*	Connector seal plug - sized to match the connector contact size (install connector seal plugs in unused pin position)	Reference product installation manual

[1] Indicates part is included in Garmin connector kit

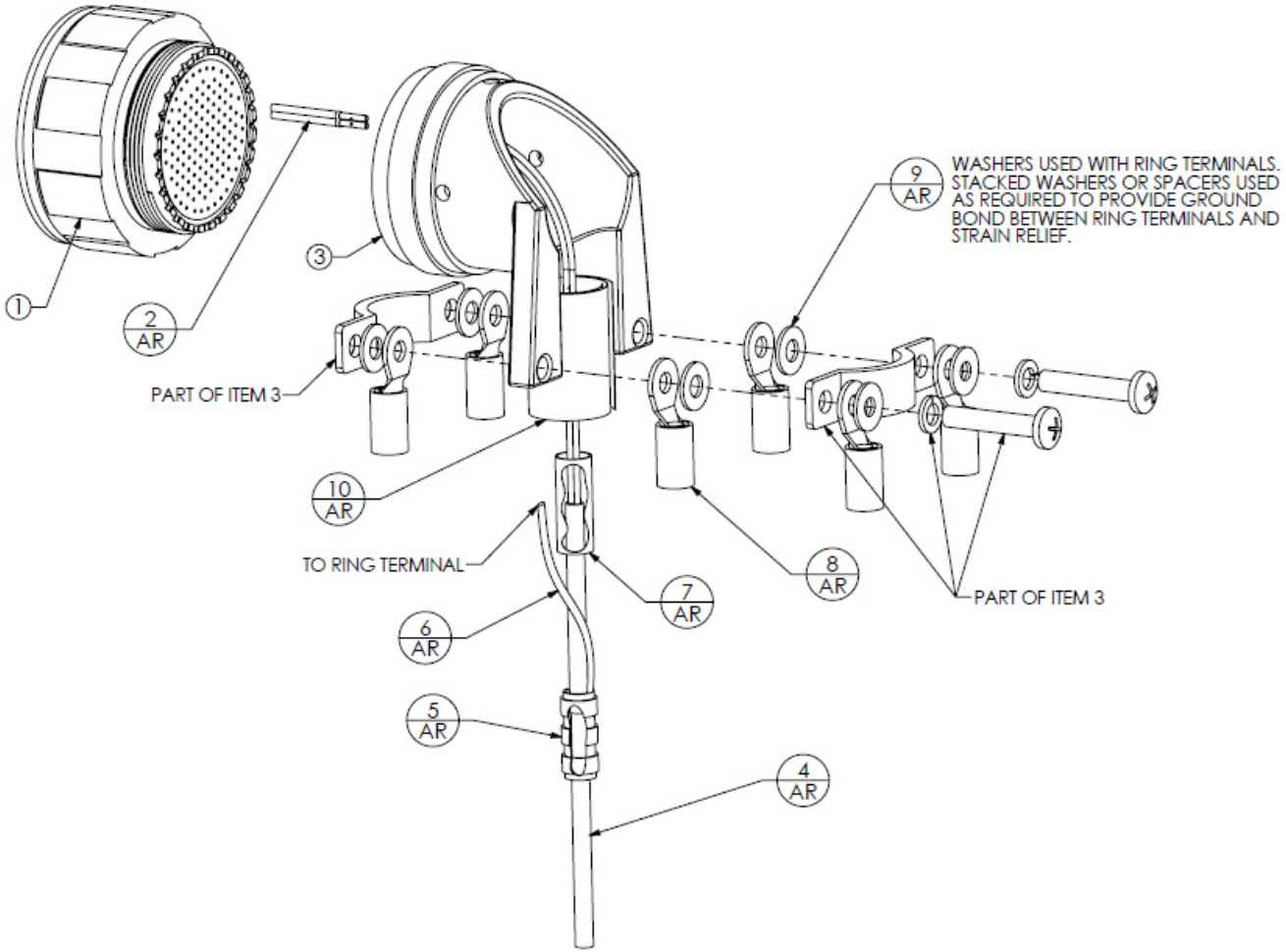

Figure 4-13 GHA 15 Right Angle Saddle Clamp Strain Relief

NOTES

1 D38999/26 CONNECTOR WITH AS85049/126S SELF-LOCKING STRAIN RELIEF SHOWN.

2 “AR” DENOTES QUANTITY “AS REQUIRED” FOR THE PARTICULAR INSTALLATION.

4.3.6 ID Program Pins (Strapping)

ID Program Pins provide a ground reference used by the hardware as a means of configuration for system identification. The following instructions will illustrate how this ground strapping should be accomplished with the Jackscrew Backshell:

1. Cut a 4 inch length of 22 AWG insulated wire.

CAUTION

Flat Braid is not permitted for this purpose. Use only insulated wire to avoid inadvertent ground issues that could occur from exposed conductors.

2. Strip back approximately 0.17 inches of insulation and crimp a contact (item 6, Figure 22-3) to the 4" length of 22 AWG insulated wire. It is the responsibility of the installer to find the proper length of insulation to be removed. Wire must be visible in the inspection hole after crimping and the insulation must be 1/64 – 1/32 inches from the end of the contact as shown in Figure 22-3.
3. Insert newly crimped pins and wires into the appropriate connector housing location as specified by the installation wiring diagrams.
4. At the end opposite the pin on the 22 AWG insulated wire strip back 0.2 inches of insulation.
5. Terminate this end using the ring terminals with the other flat braid per steps 8 through 11 (section 4.1.3) pertaining to shield termination. If this ground strap is the only wire to terminate, attach a Ring terminal, #8, insulated, 18-22 AWG (MS25036-149).

4.3.7 Splicing Signal Wires

NOTE

Figure 4-14 illustrates that a splice must be made within three inch window from outside the edge of clamp to the end of the three inch max mark.

Keep the splice out of the backshell for pin extraction, and outside of the strain relief to avoid preloading.

Figure 4-14 shows a two wire splice, but a maximum of three wires can be spliced. If a third wire is spliced, it is located out front of splice along with signal wire going to pin.

Splice Part Numbers

- Raychem D-436-36/37/38
- MIL Spec MIL-S-81824/1

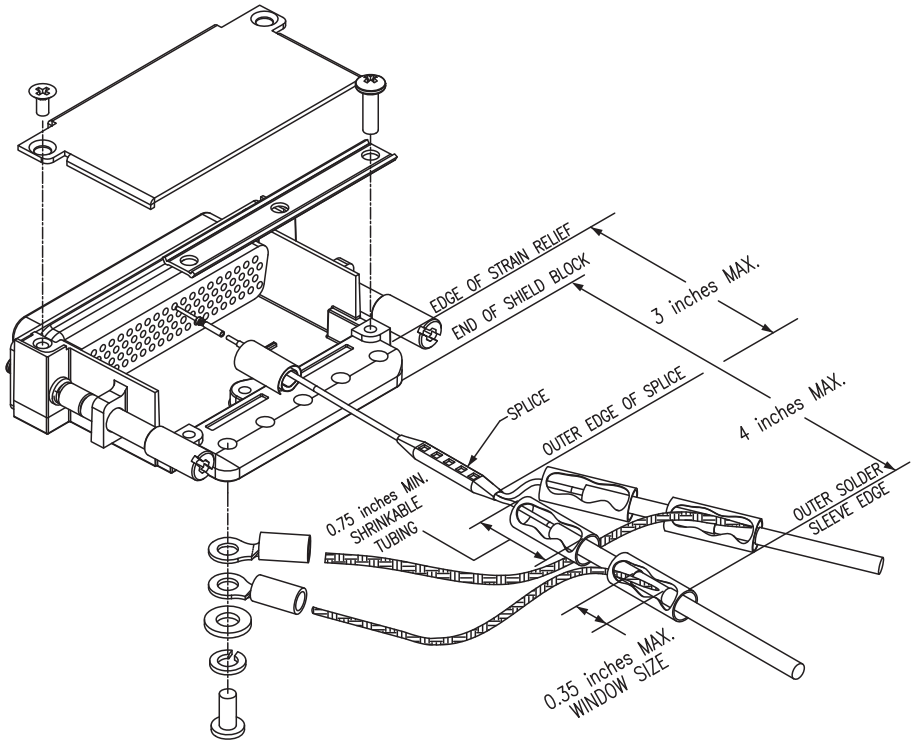

Figure 4-14 D-Sub Spliced Signal Wire Illustration

4.4 AXIS Display and Remote LRU Installations

This section includes information relating to the installation of AXIS displays and remote LRUs. Each section should be cross referenced with the content in appendix A, appendix B, and the general installation guidance provided previously in this section, when installing the unit in the aircraft and fabricating the wiring harness.

Garmin recommends that all electrical equipment, supporting brackets, racks, and antennas be electrically bonded to the aircraft's main structure. Installation should use all four mounting holes to ensure proper electrical contact.

Refer to SAE ARP 1870 Section 5 when surface preparation is required to achieve an electrical bond. Wherever the equipment is mounted, the electrical bond should achieve DC resistance less than or equal to 2.5 mΩ to the local structure.

Compliance should be verified by inspection using a calibrated milliohm meter. An equivalent EAB builder procedure may also be substituted. There may be airframe builder-specific reasons for electrically isolating equipment or having a higher bonded resistance. These reasons should be rationalized upon installation.

4.4.1 Remote LRU Installation Considerations

Use of existing aircraft avionics shelving is preferable for remote mounting of LRUs.

Installation locations should allow for inspection and service. Installations must not expose the unit to rapid thermal transients. Avoid exposed mounting locations in the cabin due to potential accidental damage by occupants.

Remote LRUs must be installed in an area free of flammable fluids, with the exception of the GEA 110, which can be mounted in the engine compartment. Remote LRUs must be installed in a cockpit/cabin environment, with the exception of the GMU 11/44(B) and GEA 110.

4.4.2 CAN Status Indicator

Many CAN LRUs have a LED status indicator built into the unit. Refer to appendix J for more information.

4.4.3 GDU 116, GDU 116C, and GDU 116NC

This section contains general information as well as installation information for the GDU 116 Base, GDU 116 COM, and GDU 116 NAV/COM units.

4.4.3.1 Equipment Description

The AXIS flight display is designed to mount in the aircraft instrument panel and replace the existing primary instruments.

Refer to section 1.2.1 for full equipment description.

4.4.3.2 Available Equipment

Table 4-3 AXIS Flight Displays

LRU	Part Number	
	Unit	Catalog
GDU 116B (Base)	011-05799-05	010-03000-00
GDU 116C (COM)	011-05799-10	010-03001-00
GDU 116NC (NAV/COM)	011-05799-20	010-03002-00

Table 4-4 AXIS Flight Display Install Kits [1]

Install Kit	Part Number
GDU 116B, New Installation	010-14469-01
GDU 116C or GDU 116NC, New Installation	010-14469-02
GDU 116B, G3X Touch Upgrade	010-14469-10
GDU 116C or GDU 116NC, G3X Touch Upgrade	010-14469-12

[1] A configuration module is required for each AXIS flight display. Each display install kit listed in table 4-4 includes one (1) configuration module (P/N 011-04037-00).

Table 4-5 Contents of GDU 116B New Installation Kit (P/N 010-14469-01)

Item	Part Number	Quantity
2Mbit configuration module kit	011-04038-01	1
50-pin jackscrew backshell (J1012)	011-01855-04	1
9-pin jackscrew backshell (J1011)	011-01855-00	1
9-pin D-sub Connector (J1011)	330-00184-09	1
50-pin D-sub Connector (J1012)	330-00186-50	1
Size 20 socket	336-00022-00	60
HDMI adapter	011-05801-00	1
Nut plate	115-01725-01	1
Panel mounting screws	211-00169-03	4

Table 4-6 Contents of GDU 116C or GDU 116NC, New Installation (P/N 010-14469-02)

Item	Part Number	Quantity
2Mbit configuration module kit	011-04038-01	1
HDMI Adapter	011-05801-00	1
62-pin jackscrew backshell (J1013)	011-01855-03	1
50-pin jackscrew Backshell (J1012 & J1015)	011-01855-04	2
9-pin jackscrew backshell (J1011)	011-01855-00	1
9-pin D-sub connector (J1011)	330-00184-09	1
62-pin HD D-sub connector (J1013)	330-00185-62	1
50-pin D-sub connector (J1012 and J1015)	330-00186-50	2
Size 22D pins	336-00021-00	60
Size 20 socket	336-00022-00	60
Size 20 pin	336-00024-00	50
Nut plate	115-01725-01	1
Panel mounting screws	211-00169-03	4

Table 4-7 Contents of GDU 116B, G3X Touch Upgrade Kit (P/N 010-14469-10)

Item	Part Number	Quantity
2Mbit Configuration Module Kit	011-04038-01	1
Panel Mounting Screws	211-00169-03	4
Cont, Sckt, Mil Crp, Size 20	336-00022-00	28
HDMI Adapter	011-05801-00	1

Table 4-8 Contents of GDU 116C or GDU 116NC, G3X Touch Upgrade Kit (P/N 010-14469-12)

Item	Part Number	Quantity
Panel mounting screws	211-00169-03	4
2Mbit configuration module kit	011-04038-01	1
62-pin jackscrew backshell (J1013)	011-01855-03	1
50-pin jackscrew backshell (J1015)	011-01855-04	1
HDMI Adapter	011-05801-00	1
62-pin HD D-sub connector (J1013)	330-00185-62	1
50-pin D-sub connector (J1015)	330-00186-50	1
Size 22D pins	336-00021-00	60
Size 20 sockets	336-00022-00	28
Size 20 pins	336-00024-00	50

4.4.3.3 Modification of Instrument Panel

Installation of the AXIS flight display system may require modification to the existing instrument panel. The extent of this modification depends on the selected AXIS flight display system configuration, choice of standby instrument(s), standby instrument placement, and any other instruments that must be retained. In some cases, it is more effective to purchase a blank instrument panel if the scope of the required changes makes it impractical to modify the existing panel.

No instrument panel modifications are required for the AXIS flight display if it is replacing an existing GDU 460 display. The display can be installed in the existing GDU 460 panel cutout. The nutplate assembly (P/N 115-01725-01) can be retained, if installed.

NOTE

The instrument panel cutout for new installations of the AXIS flight display is intentionally designed for a snug fit. The existing cutout can be used when replacing a GDU 460, however, the bezel of the GDU 116 is 0.075" larger than a GDU 46X on each side.

NOTE

The GDU 116 requires a minimum panel thickness of 0.063".

4.4.3.4 Unit Installation

The AXIS flight display is designed to mount in the aircraft instrument panel. The primary unit location should minimize pilot head movement when transitioning between looking outside of the cockpit and viewing/operating the GDU 116. The AXIS flight display should be located such that the screen is entirely viewable and within reach of the pilot (or copilot for PFD2). It is preferable for the display to be located as far up the instrument panel as practical.

The position of the AXIS flight display(s) must not interfere with the installation of flight control items or control lock devices. The location should be such that the GDU 116 is not blocked by the glareshield on top, or throttles, control yoke, etc., on the bottom. If the aircraft has a throw-over yoke, verify the yoke does not interfere with the GDU 116.

The GDU 116 is installed by holding the unit flush with the instrument panel and fastening the four 3/32" hex socket head screws to the panel as shown in section 4.4.3.7. This section includes comprehensive outline and installation drawings.

Figure 4-19 provides detailed Cutout Dimensions for the GDU 116 B/C/NC display. Figure 4-20 provides a detailed outline of the installation of the AXIS flight display nutplate. Before cutting the panel, verify there is sufficient clearance behind the GDU 116( ) location for connectors, wire harness, and Pitot-static plumbing.

NOTE

The GDU 116( ) has a single cooling fan integrated into the back of the chassis. The fan draws air through the bezel and exhausts through the fan. The mounting configuration should not restrict these two areas. External cooling is not required.

4.4.3.5 Configuration Module

The AXIS system is designed to store configuration and calibration data in multiple locations to retain the configuration of the system during maintenance. A configuration module is installed in the connector backshell of every display in the system to store important configuration data.

4.4.3.6 General Specifications

Table 4-9 AXIS Flight Display Weight and Size

LRU	Weight lb. (kg) [2]	Dimensions in. (mm)		
		Height	Width	Depth [1]
GDU 116B (Base)	5.6 (2.54)	7.83 (198.9)	11.00 (279.4)	2.37 (60.1)
GDU 116C (COM)	6.4 (2.90)			2.48 (62.9)
GDU 116 NC (NAV/COM)	6.5 (2.95)			

[1] Allow an additional 2.00 inches for connectors and wire routing.

[2] Weight doesn't include optionally mounted GSU 25D.

Table 4-10 VFR GPS Antenna Weight and Size

LRU	Weight lb. (kg)	Dimensions in. (mm)		
		Height	Width	Depth
VFR GPS Antenna	0.20 (0.092)	0.60 (15.2)	2.88 (73.2)	2.22 (56.4)

4.4.3.7 Outline and Installation Drawings

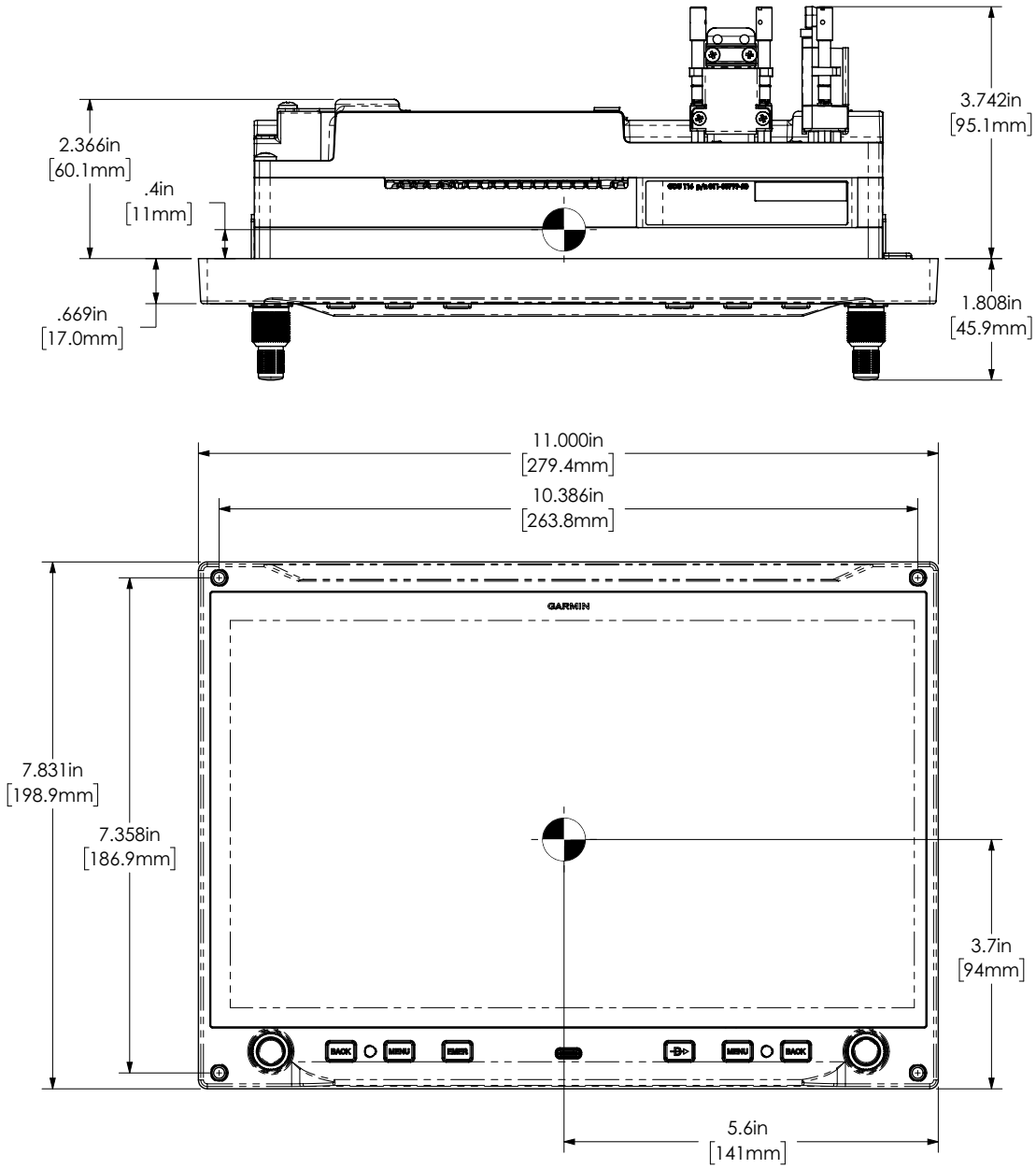

Figure 4-15 GDU 116B CG and Dimensions

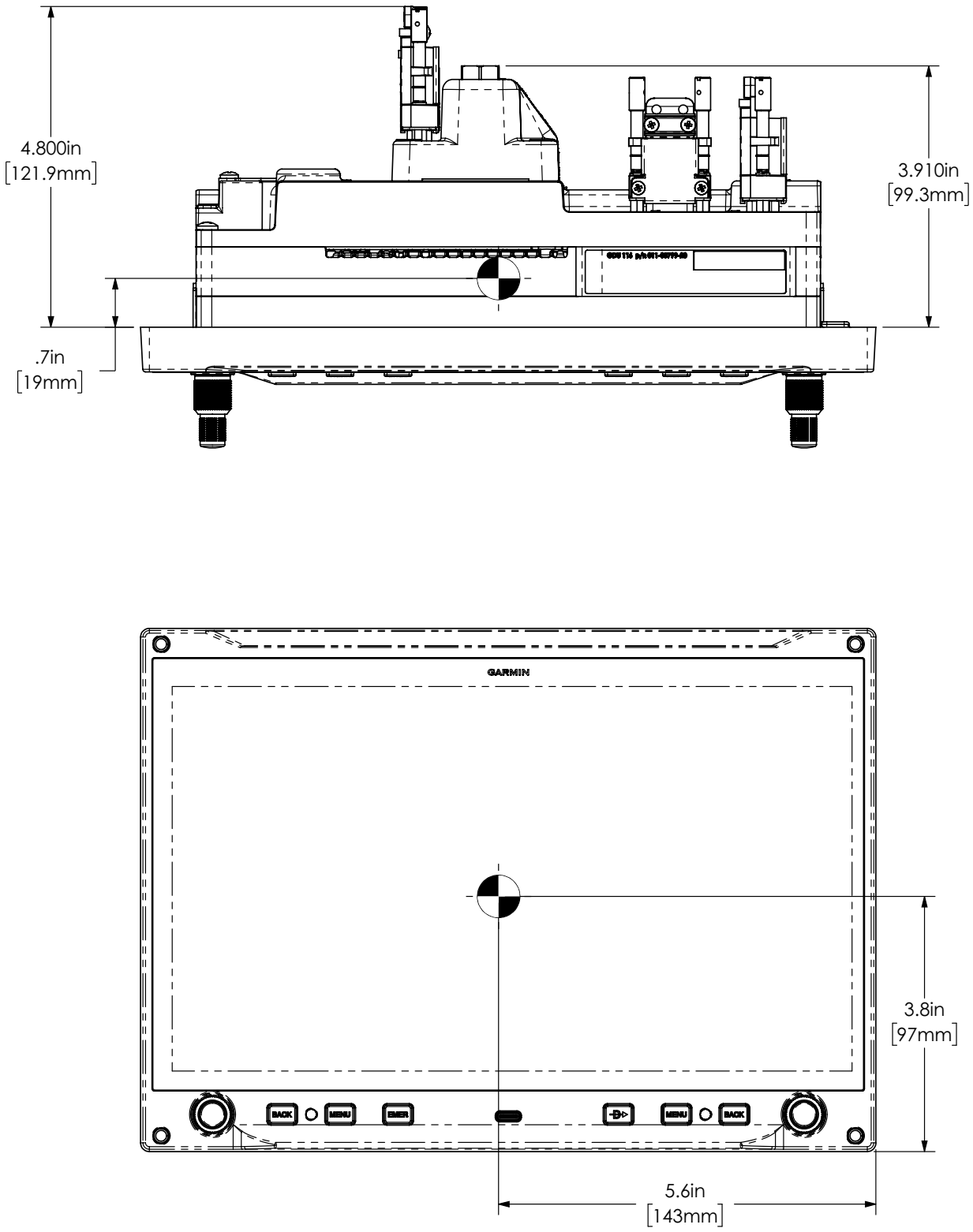

Figure 4-16 GDU 116B with GSU 25D CG and Dimensions

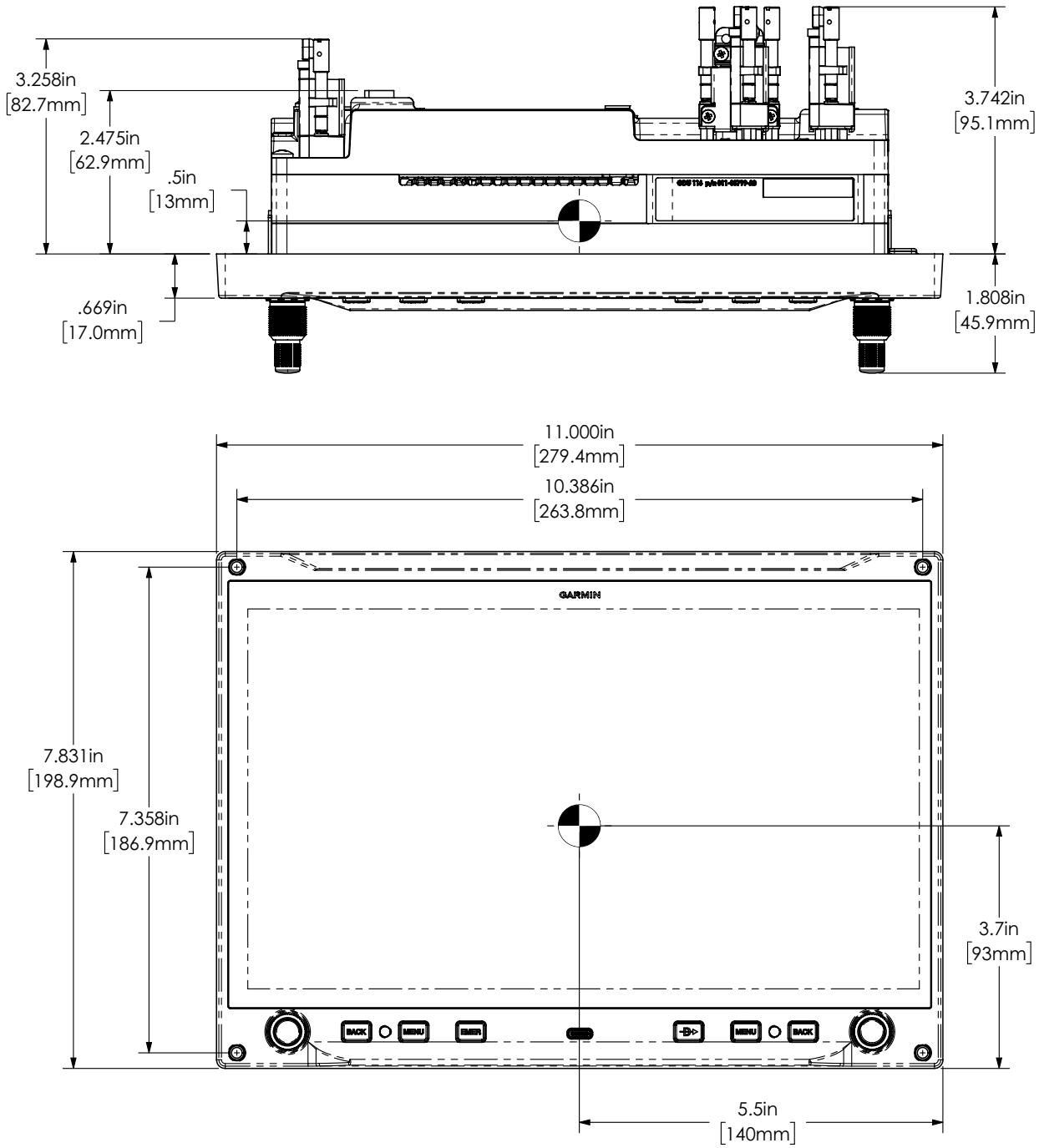

Figure 4-17 GDU 116C and GDU 116NC CG and Dimensions

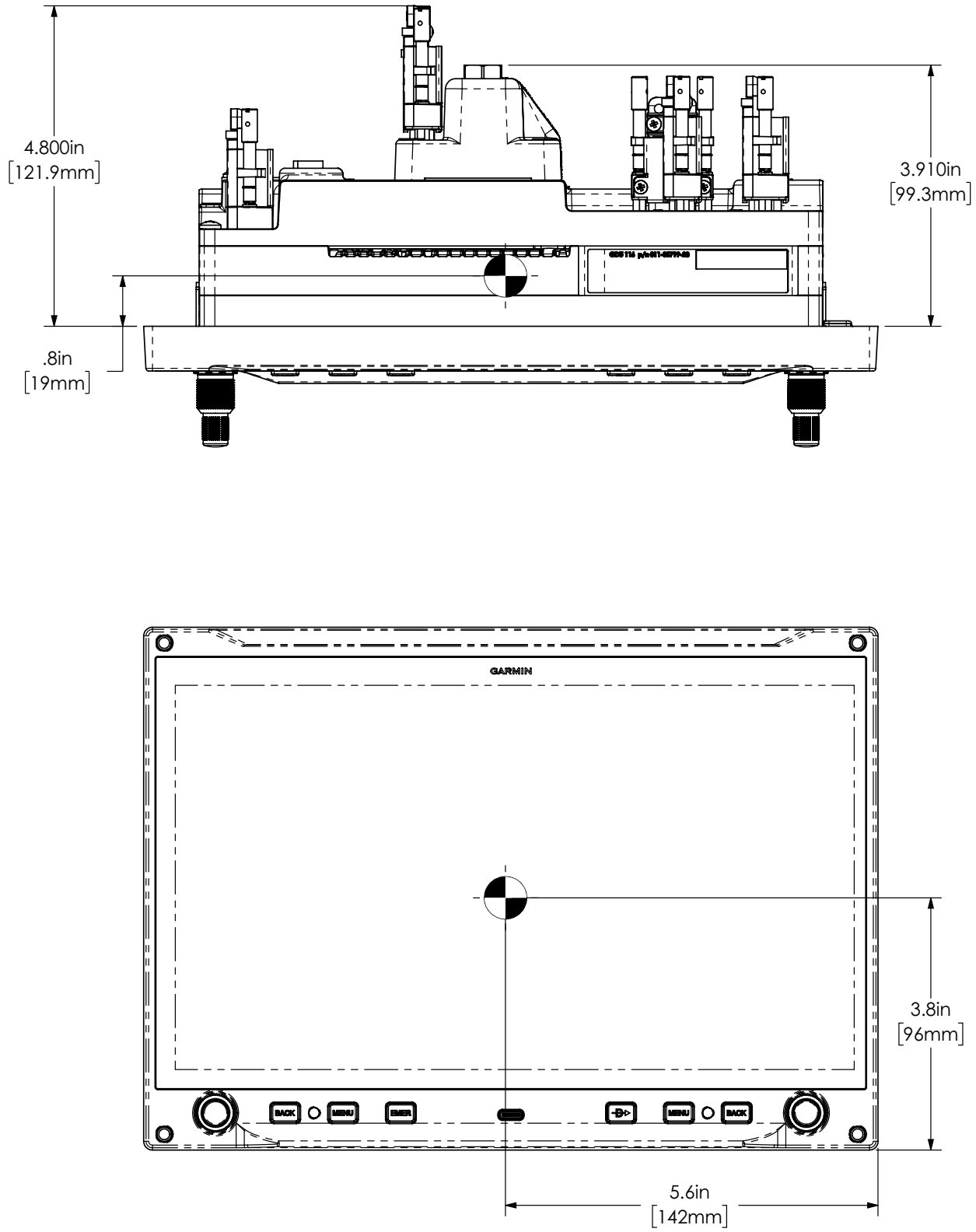

Figure 4-18 GDU 116C and GDU 116NC with GSU 25D CG and Dimensions

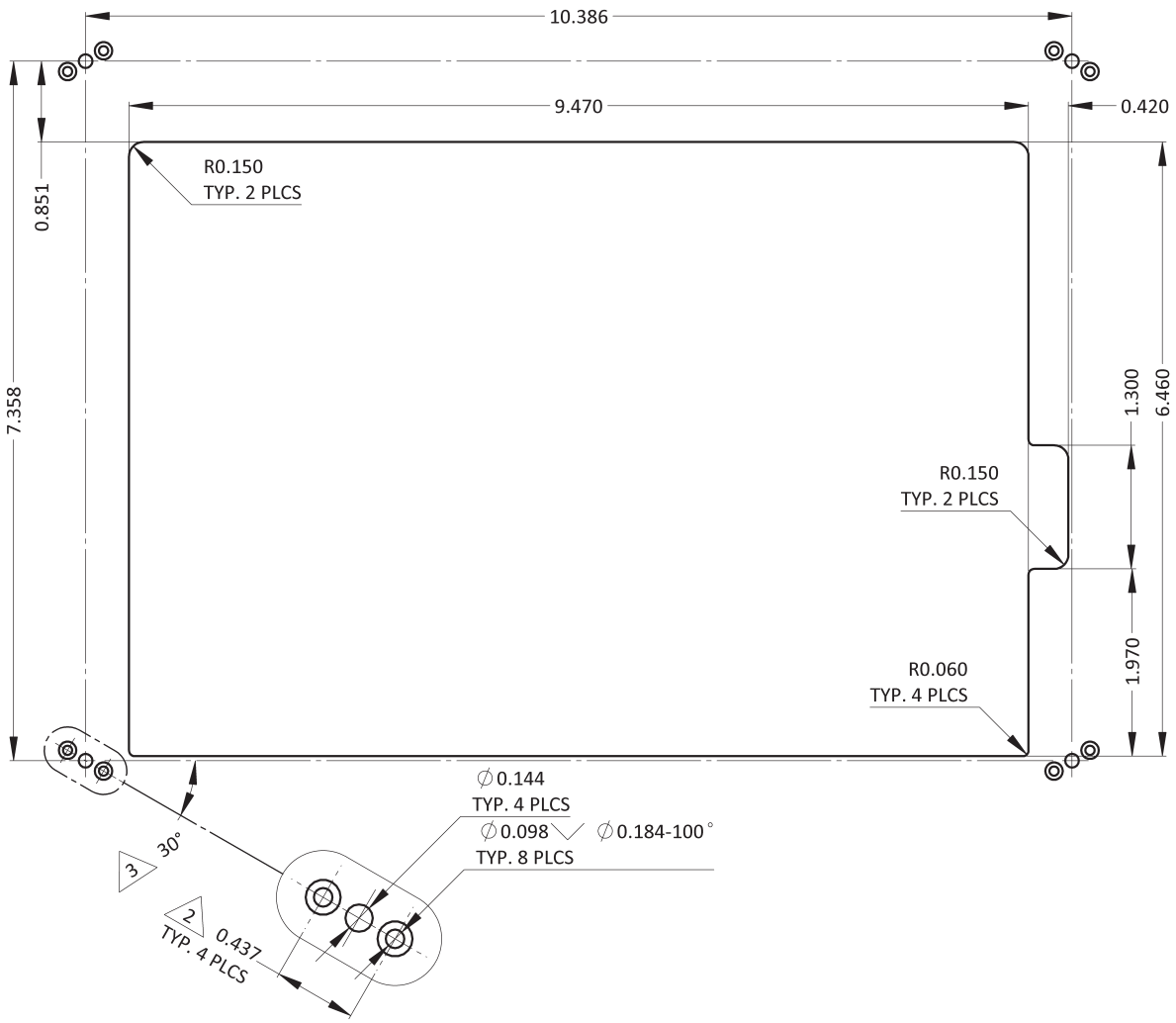

NOTES

1. DIMENSION TOLERANCES ARE 0.010 INCH.

2. DISTANCE TO MATCH THE NUTPLATE. ADJUST AS REQUIRED IF USING OTHER THAN MS21069.

3. NUTPLATE ANGLE NOT REGULATED. 30° RECOMMENDED.

Figure 4-19 AXIS Flight Display Cutout Dimensions

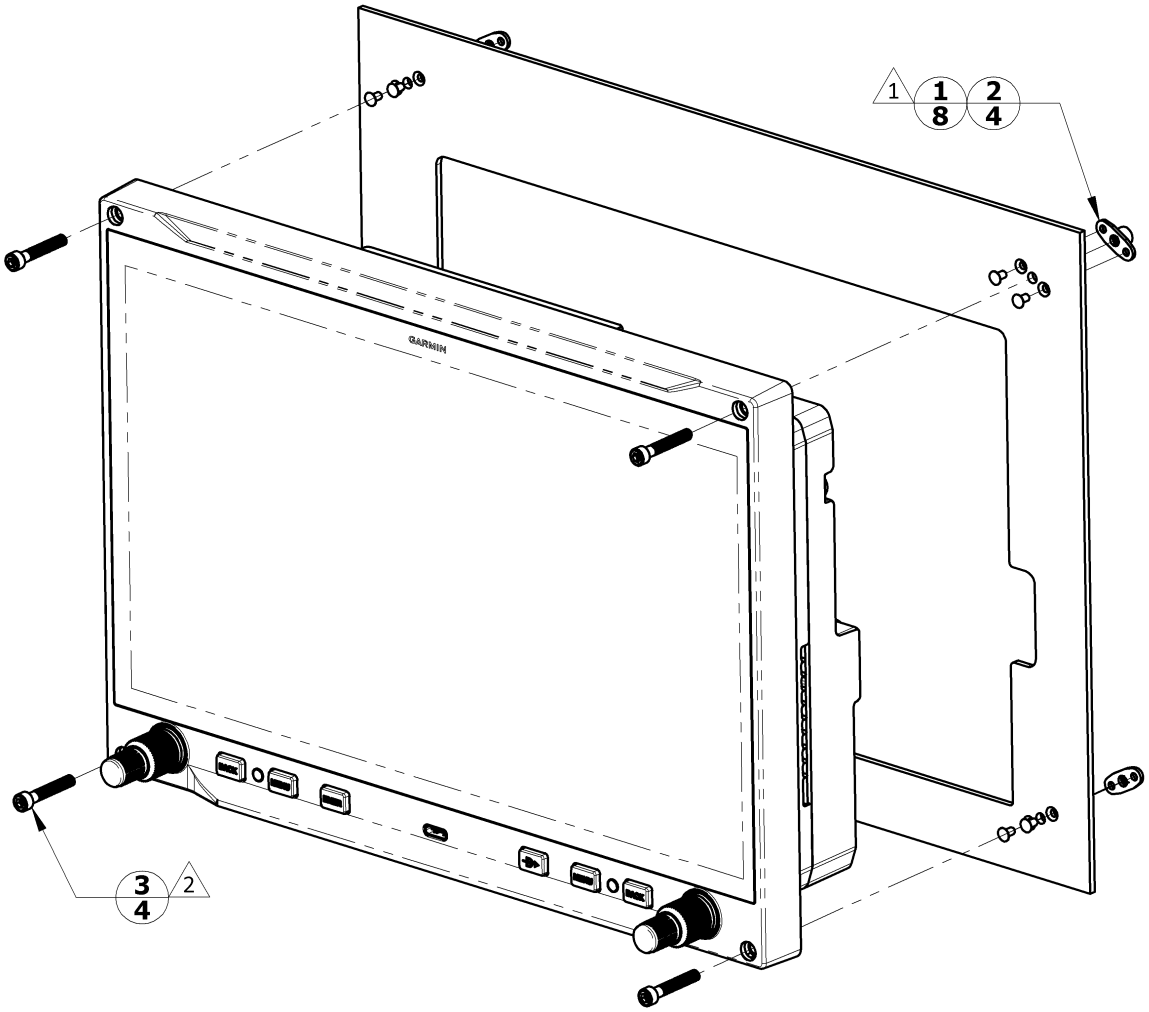

ITEM	DESCRIPTION	P/N	QTY
1	RIVET, SOLID, COUNTERSUNK 100°, PRECISION HEAD, 3/32 IN OD, 3/16 IN LONG	MS20426AD3-3	8
2	NUT, SELF-LOCKING PLATE, TWO-LUG, REDUCED RIVET SPACING, .138-32 UNJC-3B	MS21069L06	4
3	SCREW, CAP, SOCKET HEAD, 0.1380-32 UNC, 14/16-IN LONG	NAS1352-06-14	4

NOTES

1. RIVETS ARE INSTALLED PER MIL-R-47196 (NASM47196) RIVET, BUCK TYPE, PREPARATION FOR AND INSTALLATION, OR PER MIL-STD-403 *PREPARATION FOR AND INSTALLATION OF RIVETS AND SCREWS, ROCKET MISSILE, AND AIRFRAME STRUCTURES.* ADJUST RIVET GRIP LENGTH TO MATCH PANEL THICKNESS AS REQUIRED. HOLLOW NUTPLATE RIVETS CAN BE USED IN PLACE OF SOLID RIVETS.

2. ADJUST SCREW LENGTH TO MATCH PANEL THICKNESS AS REQUIRED. MS16995-21B SCREW AND GARMIN SCREW 211-00169-03 ARE ACCEPTABLE SUBSTITUTES. TORQUE 0.138-32 UNJC SCREWS 8.0 ± 1.0 IN-LB.

Figure 4-20 AXIS Flight Display Installation

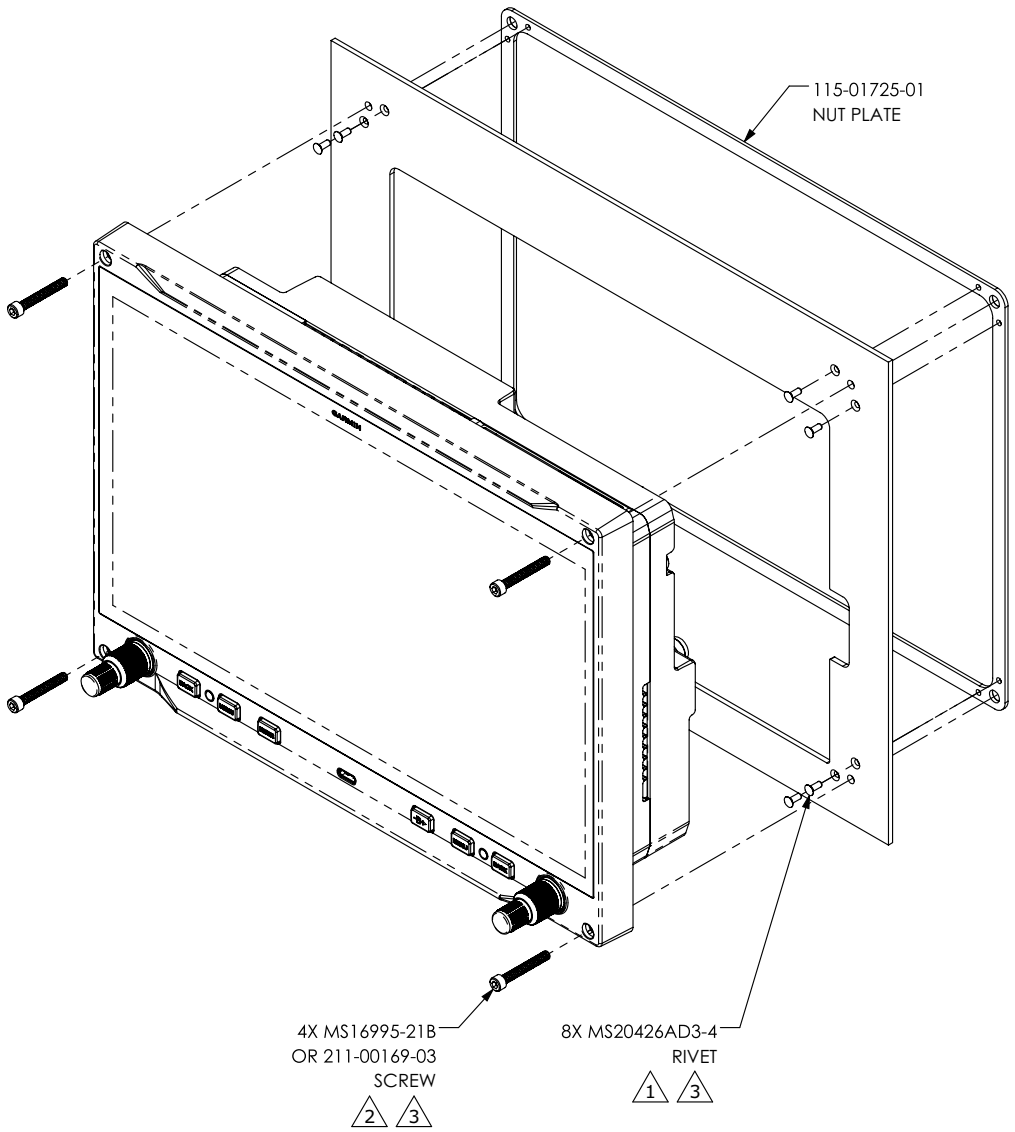

NOTES

1. RIVETS ARE INSTALLED PER MIL-R-47196 (NASM47196) OR PER MIL-STD-403.

2. TORQUE .1380-32 UNC SCREWS TO 8.0 ± 1.0 IN-LBS.

3. IT MAY BE NECESSARY TO USE DIFFERENT LENGTH FASTENERS THAN SPECIFIED. FASTENER LENGTH CAN BE SELECTED BASED ON GUIDELINES INCLUDED AC 43.13-1B, CHAPTER 7.

Figure 4-21 GDU 116( ) with P/N 115-01725-01 Nut Plate

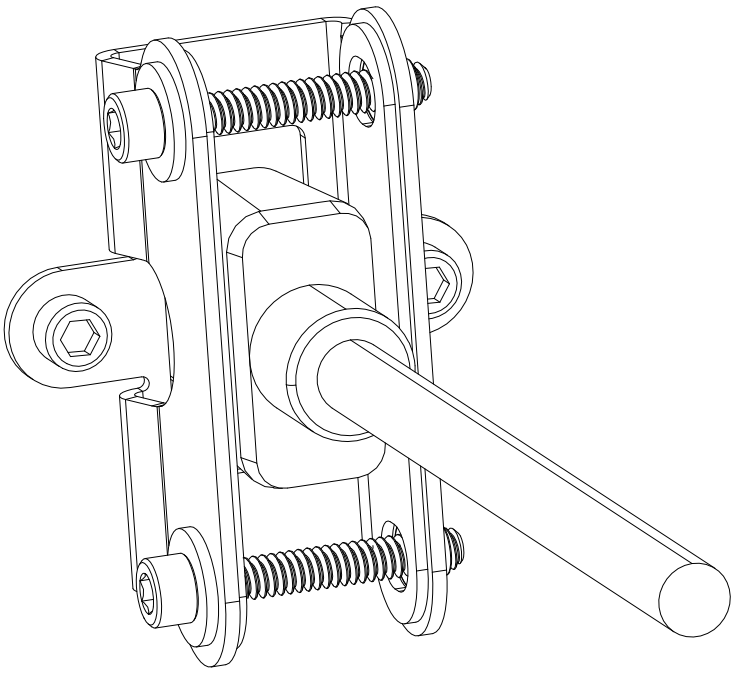

NOTES

1 ADAPTER CAN BE INSTALLED IN EITHER VERTICAL ORIENTATION.

2 TO INSTALL: FASTEN THE ADAPTER TO THE DISPLAY USING TWO PROVIDED SCREWS (8INLB). PLUG IN HDMI CABLE. TORQUE THE TWO CLAMPING SCREWS TO 8INLB TO SECURE THE HDMI CABLE TO THE ADAPTER.

Figure 4-22 HDMI Adapter (P/N 011-05801-00)

4.4.4 GSU 25 B/C/D Air Data, Attitude and Heading Reference System (ADAHRS) Installation

NOTE

References to the GSU 25 throughout this section apply equally to the GSU 25B, GSU 25C, and GSU 25D except where specifically noted.

NOTE

There is no TSO/ETSO applicable to the GSU 25. The GSU 25 is not supported for installations in type certificated aircraft using the guidance in this installation manual.

NOTE

Connection to a GMU magnetometer and GTP 59 is required for ADAHRS 1 but optional for a GSU 25 in the #2 or #3 ADAHRS position. A GAD13 may be substituted for the required GTP 59 connection to ADAHRS 1.

This section contains general information as well as installation information for the GSU 25. The guidelines presented in this section include requirements for proper location selection in the aircraft, requirements for supporting structure and mechanical alignment.

4.4.4.1 Equipment Description

The GSU 25 is an LRU that provides AHRS and air data information in a single mechanical package. It interfaces to a remote mounted GMU magnetometer for magnetic field information and also computes OAT and TAS from inputs provided by the GTP 59. Up to three GSU 25 units may be installed to provide redundancy and cross-checking of attitude, heading, and air data.

The GSU 25 connects to other LRUs in the AXIS flight display using the CAN bus. To provide an optional redundant path for attitude and air data, a secondary RS-232 connection to a single GDU (typically PFD1) is also supported.

The GSU 25 ADAHRS has three 1/8-27 ANPT female thread pressure ports that require matching male fittings to connect to the aircraft Pitot and static pressure sources. Refer to section 4.2 for guidance for the installation of pneumatic lines and connections. It can be mounted remotely in the cockpit/cabin area or mounted to the back of the AXIS flight display.

4.4.4.2 Equipment Available

Table 4-11 GSU 25 Equipment Available

Item	Garmin P/N	Quantity
GSU 25C Unit Assembly	011-02929-50 [1]	1
GSU 25D Unit Assembly	011-02929-51 [2] [4]	1
GSU 25 Connector Kit	K10-00181-00 [3]	1

[1] Part numbers 011-02929-50 and 011-02929-55 are functionally equivalent.
[2] Part numbers 011-02929-51 MOD 1 and 011-02929-56 are functionally equivalent. A non- MOD 1 011-02929-51 has a decreased Pressure Altitude Range. Refer to appendix G.
[3] Contains all items in table 4-12 and table 4-13.
[4] For aircraft capable of indicated airspeeds greater than 300 knots, the GSU 25D is used.

Table 4-12 Contents of 9-pin Connector Kit (P/N 011-03002-00)

Item	Garmin P/N	Quantity
Backshell w/Hdw, Jackscrew, 9/15 pin	011-01855-00	1
CAN Termination Kit	011-02887-00	1
D-Sub, Crimp Socket Connector, 9 CKT	330-00625-09	1
Contact Socket, Mil Crimp, Size 20, 20-24 AWG	336-00022-02	9

Table 4-13 Contents of 15 Pin Connector Kit (P/N 011-03002-01)

Item	Garmin P/N	Quantity
Backshell w/Hardware, Jackscrew, 15/26 pin	011-01855-01	1
AN3-7A, Bolt	211-00090-05	4
AN960, Cad Plate, #10 Washer	212-00035-10	4
Washer, Int Star, MS35334, #10	212-00081-03	4
D-Sub, Crimp Socket Connector, 15 CKT	330-00625-15	1
Contact Socket, Mil Crimp, Size 20, 20-24 AWG	336-00022-02	15

4.4.4.3 Mounting Location

The GSU 25 contains an extremely sensitive strap-down inertial measurement unit, consider the following when selecting a mounting location:

- Orient remotely in any of the orientations shown in figure 4-26 but must satisfy the mounting alignment requirements along the longitudinal/lateral axes of the aircraft.
- The unit can be mounted in any of the four cardinal directions with the connectors pointing up or down can also be mounted on a vertical surface, with the connectors facing up, down, forward, aft, left, or right.
- Although mounting the GSU 25 to the threaded holes on the back of the GDU 116 display is not generally recommended due to instrument panel flexing, the “Tubes Forward/Connectors Port” or “Tubes Forward/Connectors Starboard” configuration should be selected when this location is used. Instrument panel material should be at least 0.063" in thickness to produce satisfactory results.
- Mount the GSU 25 with the connectors aligned within 1.0° of either the longitudinal or lateral axis of the aircraft. The direction of the unit will be accounted for during the calibration procedure.
- The GSU 25 must be mounted rigidly to the aircraft primary structure through strong structural members capable of supporting substantial loads, refer to figure 4-23 for torque specifications.
- The supporting plate must be rigidly connected.
- The GSU 25 should be mounted within 13 feet (4.0 meters) longitudinally and 6.5 feet (2.0 meters) laterally of the aircraft CG (center of gravity). In cases where the longitudinal distance from the CG is planned to be greater than 6.5 feet (2.0 meters), it is preferable to mount the GSU 25 forward of the aircraft CG if possible, to enable better acceleration outputs for autopilot use.
- Avoid placing the GSU 25 near sources of vibration or audible noise. Example locations to be avoided include the engine firewall, near large motors or fans, and audible buzzers and speakers.
- Do not mount the GSU 25 in an enclosed area, it should be mounted in a location that provides adequate airflow.
- Avoid areas that are prone to severe vibration. Excessive vibration may result in degraded accuracy.
- Do not use shock mounting to mount the GSU 25. Shock mounts used for other types of inertial systems are not acceptable for the GSU 25 AHRS. The mounting system must have no resonance with the unit installed. The unit and mounting structure must not have any resonance with respect to the aircraft primary structure.
- The wing is not an ideal location to install the GSU 25. Installing a GSU 25 in the wing may exceed the lateral CG boundary for the unit, exposes the unit to potential wing flex (of which any amount is a problem), and may expose the unit to unacceptable levels of acoustic noise resulting from precipitation impacting the leading edge of the wing. These are potential sources of error in the determination of attitude and should be avoided.
- The GSU 25 must be leveled to within 30.0° of the in-flight level cruise attitude and an aircraft leveling and offset calibration procedure carried out before flight.
- The mounting location for the GSU 25 should be protected from rapid thermal transients, in particular, large heat loads from nearby high-power equipment.
- Avoid placing the GSU 25 within 1 inch of magnetically mounted antennas, speaker magnets, or other strongly magnetic items.

4.4.4.4 Unit Installation

It is critical the GSU 25 is mounted in alignment with the centerline of the aircraft. The GSU 25 must be mounted with connectors aligned within 1.0° of either the longitudinal or lateral axis of the aircraft.

The specification for mounting the GSU 25 such it is level with respect to pitch/roll of the aircraft is not nearly as restrictive and must only be within 30.0° in each axis. In most installations, the GSU 25 is mounted relatively level with respect to the zero waterlines of the aircraft (e.g. longerons), even though it is not required (again, it must only be within 30.0°).

4.4.4.4.1 Panel Mounting (Back of AXIS Flight Display)

The GSU 25 may be installed on the back of the AXIS flight display. The display has mounting holes for installation of a GSU 25. Refer to figure 4-23.

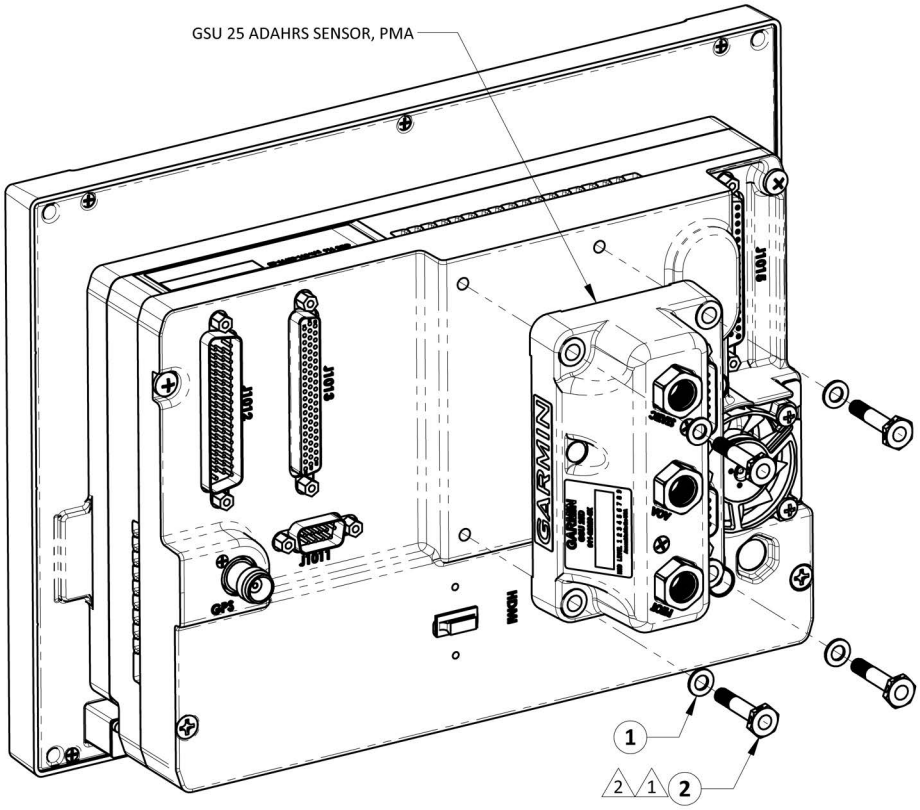

ITEM	DESCRIPTION	P/N	QTY
1	WASHER, FLAT, ALUMINUM ALLOY, 0.032 INCH THICK, ID 0.195, OD 0.354	011-04036-10	4
2	BOLT, HEX HEAD, CLOSE TOLERANCE, .1900-32 UNF-3A, 10/16 IN GRIP, DRILLED HEAD	NAS6603H10	4

NOTES

1. TORQUE GSU 25 0.1900-32 BOLTS 12.0 TO 15.0 IN-LB AND SAFETY WIRE BOLT HEADS TOGETHER IN PARIS PER MS33540 (NASM 33540) SAFETY WIRING AND COTTER PINNING.

2. SAFETY CABLE(S) OR MS35333-39 LOCK WASHERS INSTALLED UNDER EACH BOLT HEAD CAN BE USE IN PLACE OF SAFETY WIRE.

Figure 4-23 GSU 25 Mounting to AXIS Flight Display

4.4.4.5 GSU 25 Pitot-Static and AOA Connections

CAUTION

The temporary port plugs attached to the pressure ports on a new GSU 25 are not suitable for flight, remove them before installation of the GSU 25 into aircraft.

CAUTION

If the AOA port is unused, connect it to the static port to avoid over-pressurization and causing damage to the internal AOA sensor. It can remain connected to the static port for the Pitot-static test.

CAUTION

When the GSU 25 is used in conjunction with the GAP 26 Pitot/AOA probe to perform Part 43 Appendix E altimeter tests, the probe adapter from the Pitot-static tester must completely cover the Pitot and AOA ports and drain holes on the GAP 26 to avoid over-pressurization (and causing damage to) the internal AOA sensor of the GSU 25. If the GAP 26 is installed but AOA is unused (i.e., the AOA port of the GAP 26 is not connected to the AOA port of the GSU 25) then the GAP 26 AOA port must be connected to the same pressure port as the Pitot port during Pitot-static testing.

NOTE

Use of different colored tubing is recommended for static, Pitot, and AOA plumbing to avoid plumbing connection errors. Incorrect plumbing connections will result in erroneous air data information calculated by the GSU 25.

NOTE

Refer to section 4.2 for guidance on modifying the Pitot-static system and when installing a GAP 26 to connect the pneumatic AOA line between the probe and the GSU 25D.

The GSU 25 has three ports that are connected to the Pitot pressure source, static pressure source, and AOA. The ports are labeled on the unit (figure 4-24). The pressure ports have 1/8-27 ANPT female threads. The mating fitting must have 1/8-27 ANPT male threads.

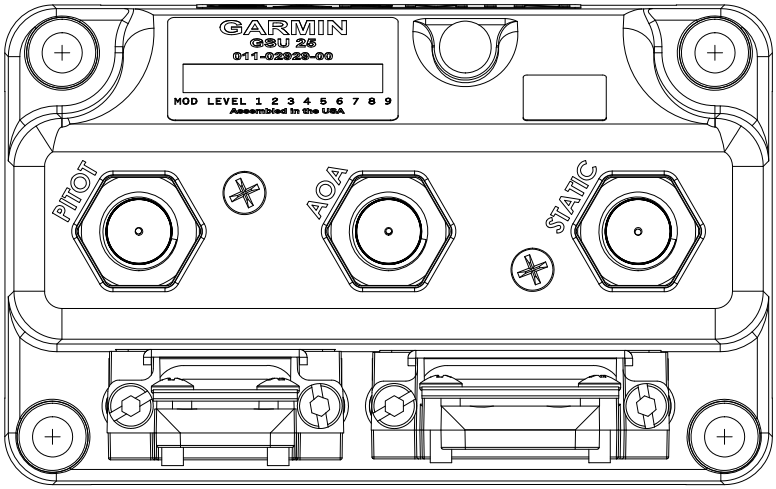

Figure 4-24 GSU 25 Air Hose Fitting Locations

If the GAP 26 AOA probe is not installed, the AOA port must be connected to the static line using a 1/8-27 ANPT male fitting to avoid damage to internal pressure sensors during static system tests, if applicable. Refer to figure 4-25.

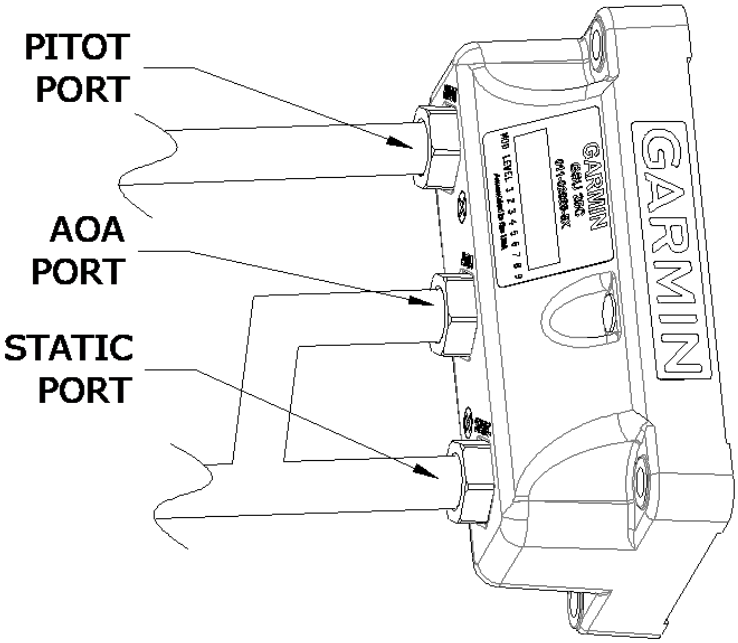

Figure 4-25 Pitot-Static Connections for GSU 25D (No GAP 26)

The following steps should be used to aid in the fabrication of pneumatic hose connections and in attaching the aircraft Pitot pressure source and aircraft static pressure source to the GSU 25.

Refer to the following cautions when connecting pneumatic lines:

1. Make sure the aircraft static pressure port is plumbed directly to the unit static pressure input port and the aircraft Pitot pressure port is plumbed directly to the unit Pitot pressure input port. The AOA port must be plumbed directly to the AOA pressure port or, if unused, directly to the aircraft static port.
2. Seal the threads of pneumatic fittings at the connector ports. Use caution to make sure there are no pneumatic leaks.
3. Use care to avoid getting fluids or particles anywhere within the pneumatic lines connected to the GSU 25.

4.4.4.6 General Specifications

Table 4-14 GSU 25 Power and Current

LRU	Supply Voltage	Current Draw
GSU 25	14 VDC	0.2 Amp (includes GMU 22 load)
	28 VDC	0.11 Amp (includes GMU 22 load)

Table 4-15 GSU 25 Dimensions and Weights

LRU	Width	Height	Depth	Unit Weight	Weight of Unit and Connector(s)
GSU 25	4.0 inches (101.6 mm)	2.12 inches (53.8 mm) 2.61 inches (66.2 mm) w/connector	2.5 inches (63.5 mm)	0.48 lbs. (0.22 kg)	0.68 lbs. (0.31 kg)

4.4.4.7 Outline and Installation Drawings

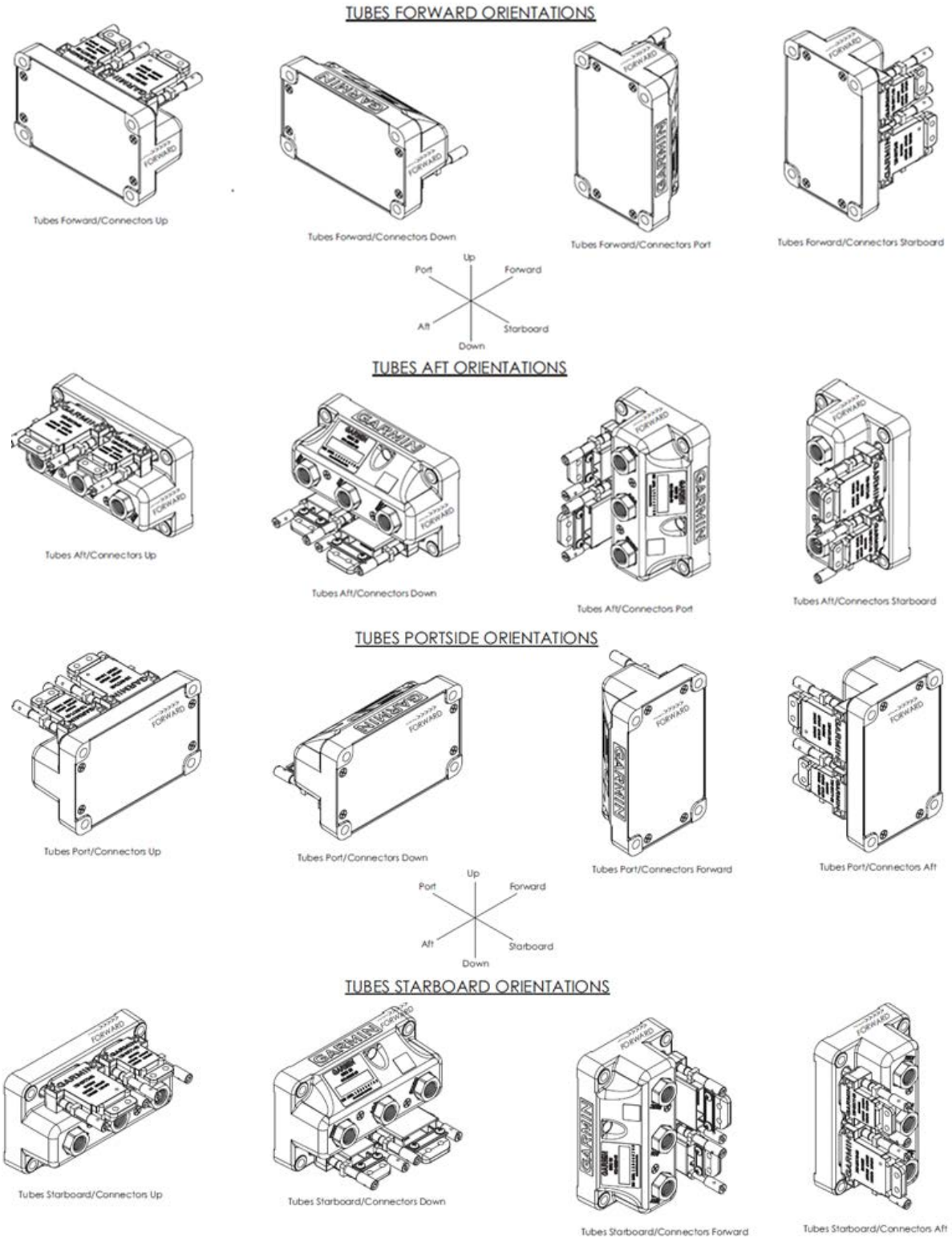

Figure 4-26 GSU 25 Mounting Orientations
Sheet 1 of 2

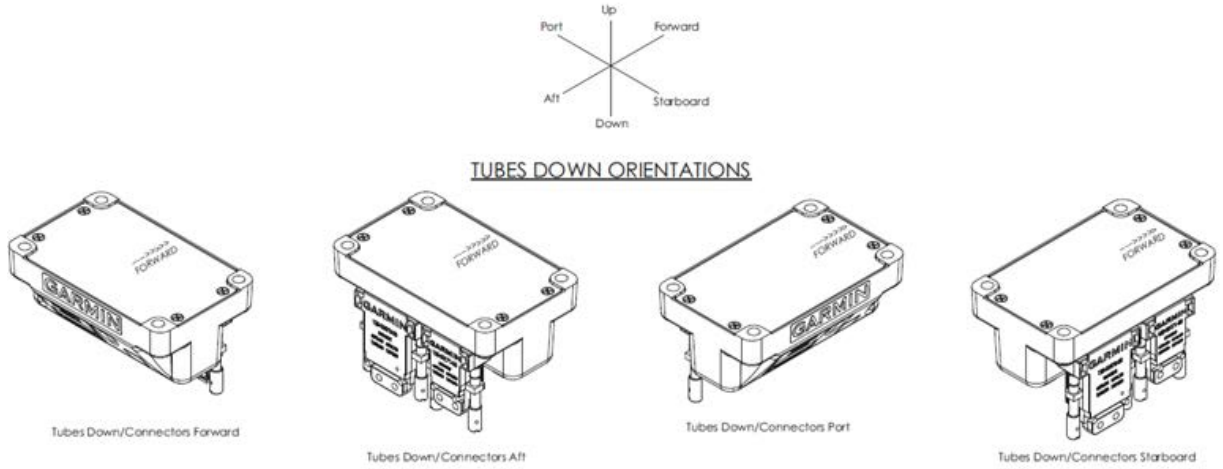

Figure 4-26 GSU 25 Mounting Orientations
Sheet 2 of 2

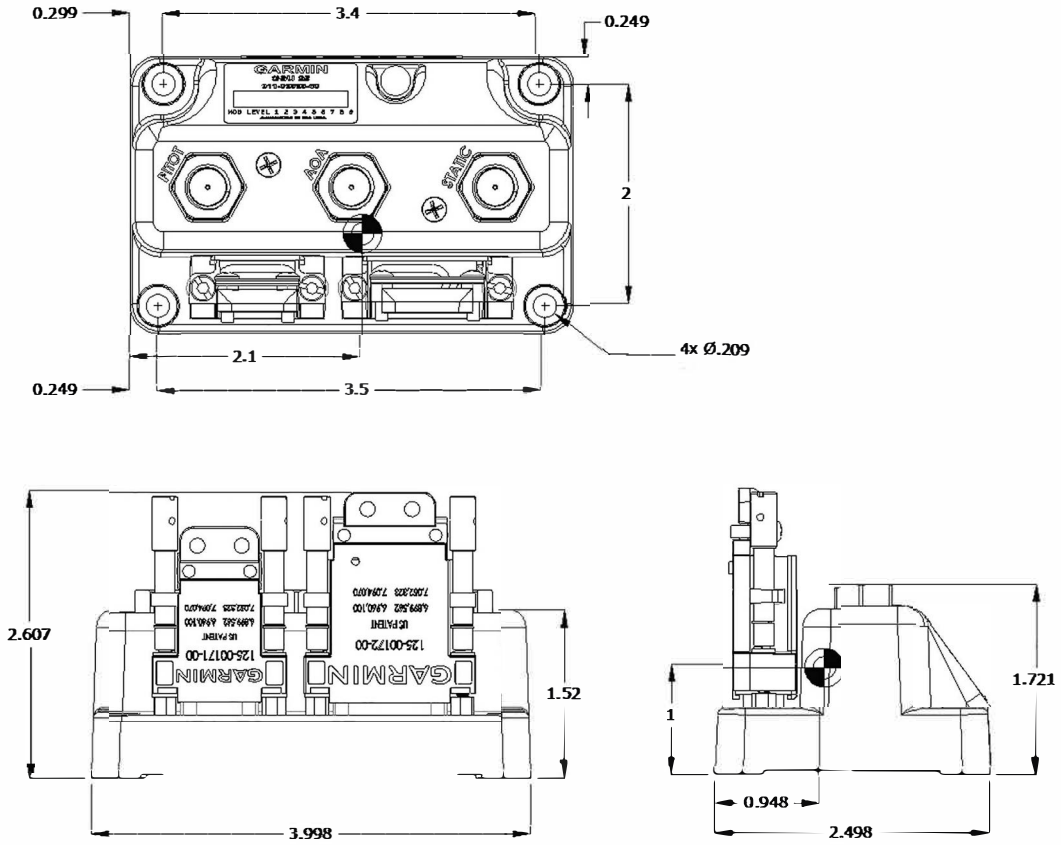

Figure 4-27 GSU 25 Unit View

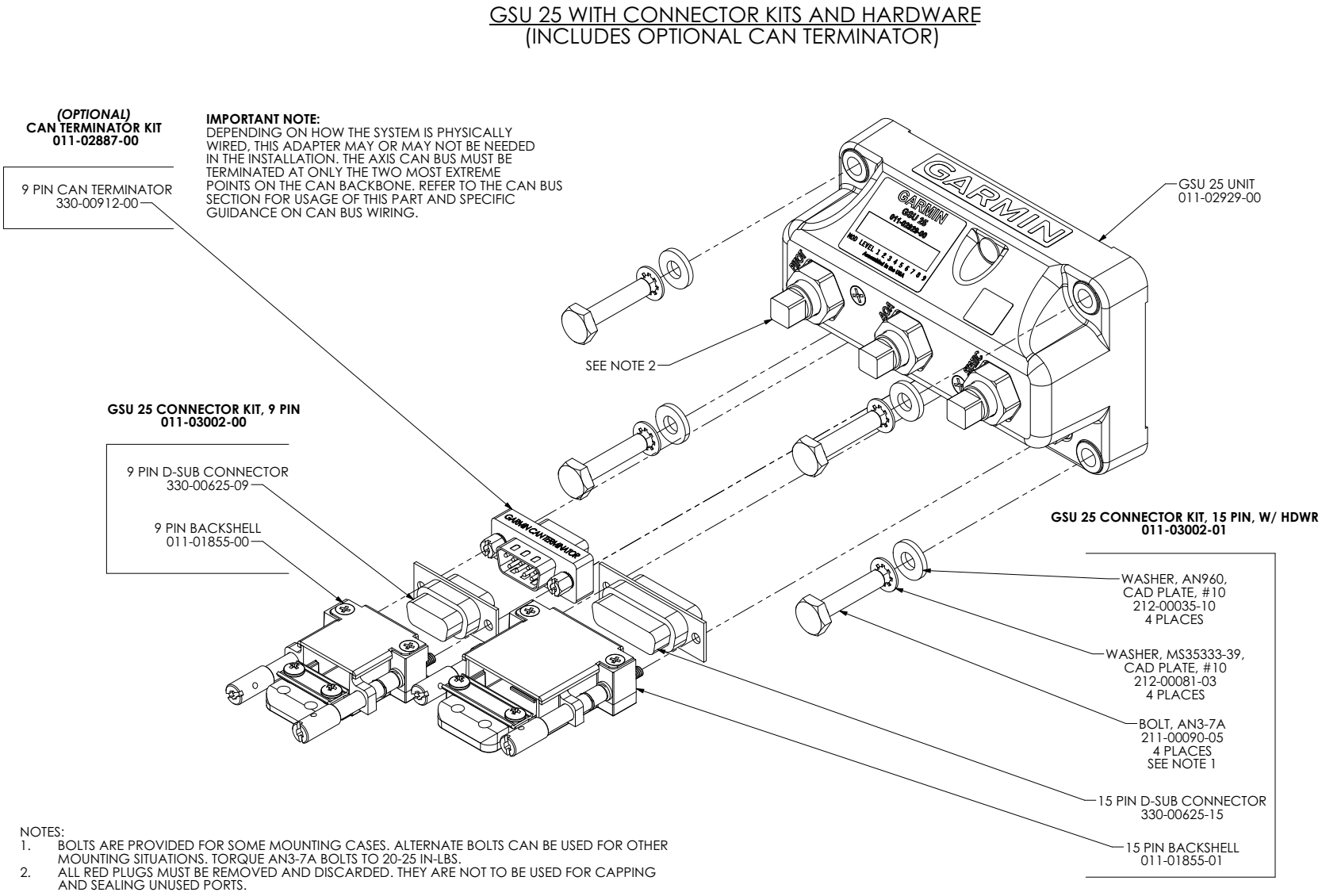

Figure 4-28 GSU 25 Installation Drawing

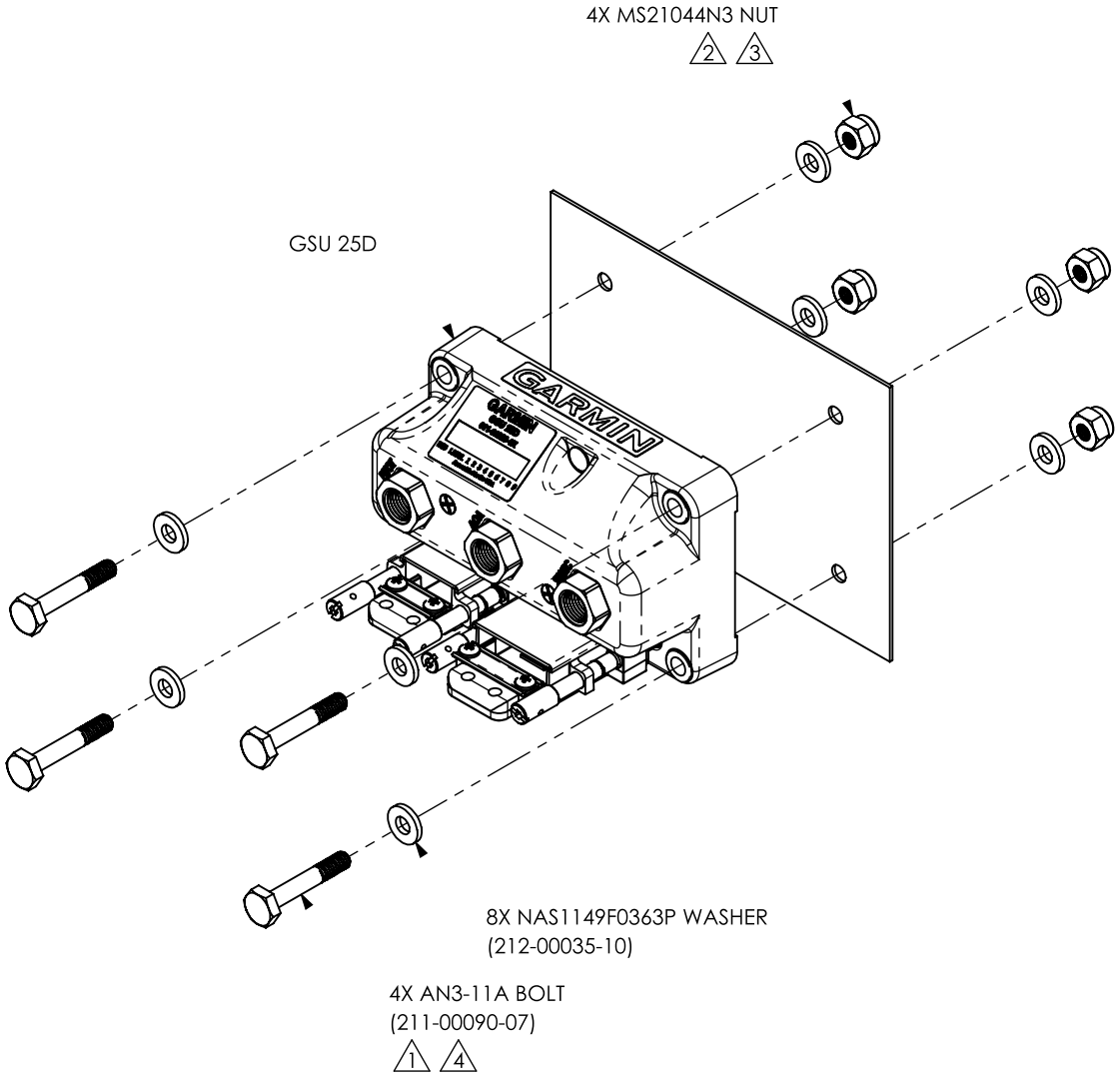

NOTES

1. PERMITTED TO SUBSTITUTE MS24693-XXX COUNTERSUNK SCREWS FOR AN3 BOLTS AND CORRESPONDING NAS1149 WASHERS. IF COUNTERSUNK SCREWS ARE USED, THE HARDWARE MUST BE ORIENTATED WITH THE HEAD OF THE SCREW ON THE MOUNTING SHELF AND THE WASHER AND NUT ON THE GSU 25D.

2. PERMITTED TO SUBSTITUTE #10 MS (MIL-SPEC) PART NUMBER NUTPLATES AND MS20426AD3-X RIVETS FOR MS21044N3 NUTS AND CORRESPONDING NAS1149 WASHERS. RIVETS ARE INSTALLED PER MIL-R-47196 (NASM47196) *RIVET, BUCK TYPE, PREPARATION FOR AND INSTALLATION*, OR PER MIL-STD-403 *PREPARATION FOR AND INSTALLATION OF RIVETS AND SCREWS, ROCKET MISSILE, AND AIRFRAME STRUCTURES.*

3. TORQUE .190-32 UNJF-3B NUTS TO 20-25 IN-LBS. IF NUTPLATES ARE USED, TORQUE .190-32 UNF-3A BOLTS TO 20-25 IN-LBS.

4. IT MAY BE NECESSARY TO USE DIFFERNT LENGTH FASTENERS THAN SPECIFIED. FASTENER LENGTH CAN BE SELECTED BASED ON GUIDELINES INCLUDED IN AC 43.13-1B, CHAPTER 7.

Figure 4-29 GSU 25 Shelf Mounting

4.4.5 GTP 59 Outside Air Temperature (OAT) Probe Installation

Use this section to install the GTP 59 OAT probe in the aircraft.

WARNING

If ice accumulates on the GTP 59, its accuracy is unknown since there is no icing protection. Furthermore, computations dependent upon air temperature measurements may be affected (e.g. true airspeed and delta-ISA).

NOTE

For installations using more than one ADAHRS, ADAHRS 1 must be connected to a GTP 59, but installing additional GTP 59s for other GSU 25 ADAHRS units is optional. An ADAHRS not connected to a GTP 59 will use temperature data supplied by other ADAHRS as long as both ADAHRS are communicating using the CAN bus.

NOTE

A GAD 13 connected OAT probe is a sufficient substitution for the required OAT probe. OAT data from the GAD13 will be shared with all GSU 25 ADAHRS units in the system via CAN bus.

Figure 4-30 GTP 59

4.4.5.1 Required Equipment

Table 4-16 GTP 59 Part Number

Item	Garmin Part Number
GTP 59 OAT probe kit	011-00978-00 [1]

[1] Included in AXIS Standard LRU (P/N K10-00016-04).

Table 4-17 contains a list of items found in the GTP 59 OAT probe kit (P/N 011-00978-00.) The GTP 59 has an attached pigtail.

Table 4-17 GTP 59 OAT Kit (P/N 011-00978-00)

Item	Garmin Part Number	Quantity
Nut, 5/16”, Hex, Skirt	210-00055-00	1
Screw, 4-40 x .250, PHP, SS/P, w/NYL	211-60234-08	2
Washer, Lock, Self-Sealing, 5/16	212-00026-00	1
Contact, Pin, Mil Crimp, Size 22D	336-00021-00	5
GTP 59 OAT Probe	494-00022-XX	1

4.4.5.2 Unit Installation

NOTE

The GTP 59 is a Resistive Temperature Device (RTD) that detects changing temperature by monitoring small changes in resistance. For optimum accuracy, take care to avoid introducing extra resistance, such as loose, dirty, or corroded connections in the wiring path between the ADAHRS and GTP 59.

Consider the following recommendations when determining the mounting location for the GTP 59:

- Do not mount the GTP 59 where aircraft exhaust gases will flow over it.
- Do not mount the GTP 59 where it would be affected by heated air from the engine or exhaust. On most aircraft this includes any location downstream of the engine compartment.
- The GTP 59 must be exposed to the outside airflow. Do not mount the GTP 59 in a sheltered location where it is not exposed to outside airflow (for example, inside a wing or landing gear bay).
- For best results, do not mount the GTP 59 where it will be directly heated by the sun when the aircraft is parked.

1. Prepare the surface. The metal body of the GTP 59 should be grounded to the aircraft. The installation requirements vary depending on the airframe material composition.
   - Aluminum airframe: When a mounting location has been found, prepare the inside surface of the aircraft. Remove all paint from the contacting area and clean with a degreaser.
   - Composite airframe: If possible, mount the OAT probe through a grounded metal strap or band. Otherwise, mount the OAT probe in an area of the airframe that has a significant amount of underlying metal foil or mesh. To provide adequate conductivity, it may be necessary to mount the OAT probe through a metal doubler. Use fasteners that allow a conductive path to the airframe.
2. Mount the probe on the prepared surface.
3. Place the ring terminal over the end of the probe.
4. Insert the probe and ring terminal into the hole in the skin of the aircraft.
5. Place the washer over the end of the probe on the outside skin of the aircraft.
6. Thread the nut onto the probe.
7. Hold the probe on the inside and tighten the nut to 100 inch-lbs. ±20 inch-lbs.
8. Route the probe cable to the ADAHRS unit.
9. Cut the probe cable to the required length.
10. Strip back 2.0" to 3.5" of jacket while retaining the shield on the probe cable.
11. Trim away enough to leave 0.5” of shield exposed.
12. Strip back 1/8" (0.125") of insulation and crimp pins to each of the conductors in the shielded cable.
13. Cut an AWG #16 wire to 3" long.
14. Strip back 0.5" of insulation from this cable.
15. Connect the shield of the probe cable to the AWG #16 wire.
16. Attach the ring terminal to the backshell, using the screw provided in the probe kit and one of the tapped holes on the backshell termination area.

17. Insert newly crimped pins into the D-sub connector and wires into the appropriate connector housing location as specified by the installation wiring diagrams.
18. Wrap the cable bundle with silicone fusion tape (P/N 249-00114-00 or similar) at the point where the backshell strain relief and cast housing contact the cable bundle. The smooth side of the backshell strain relief should contact the tape.

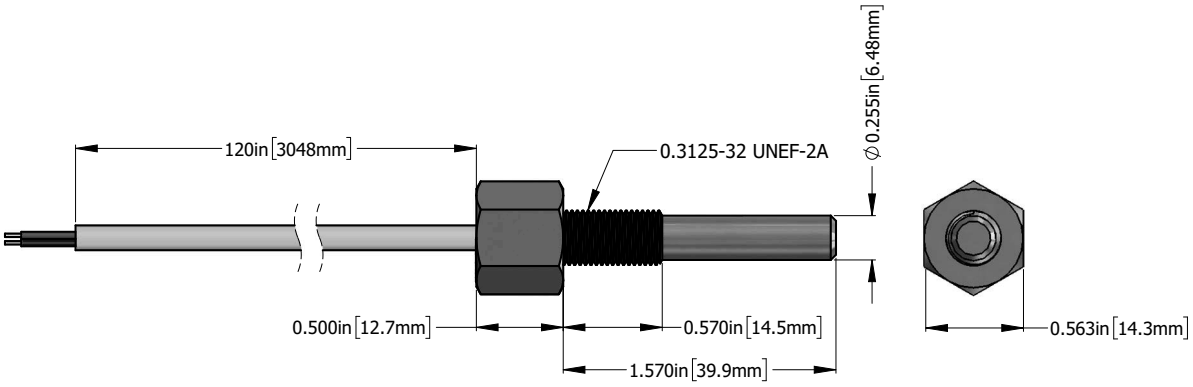

Figure 4-31 GTP 59 OAT Dimensions

4.4.5.3 Outline and Installation Drawings

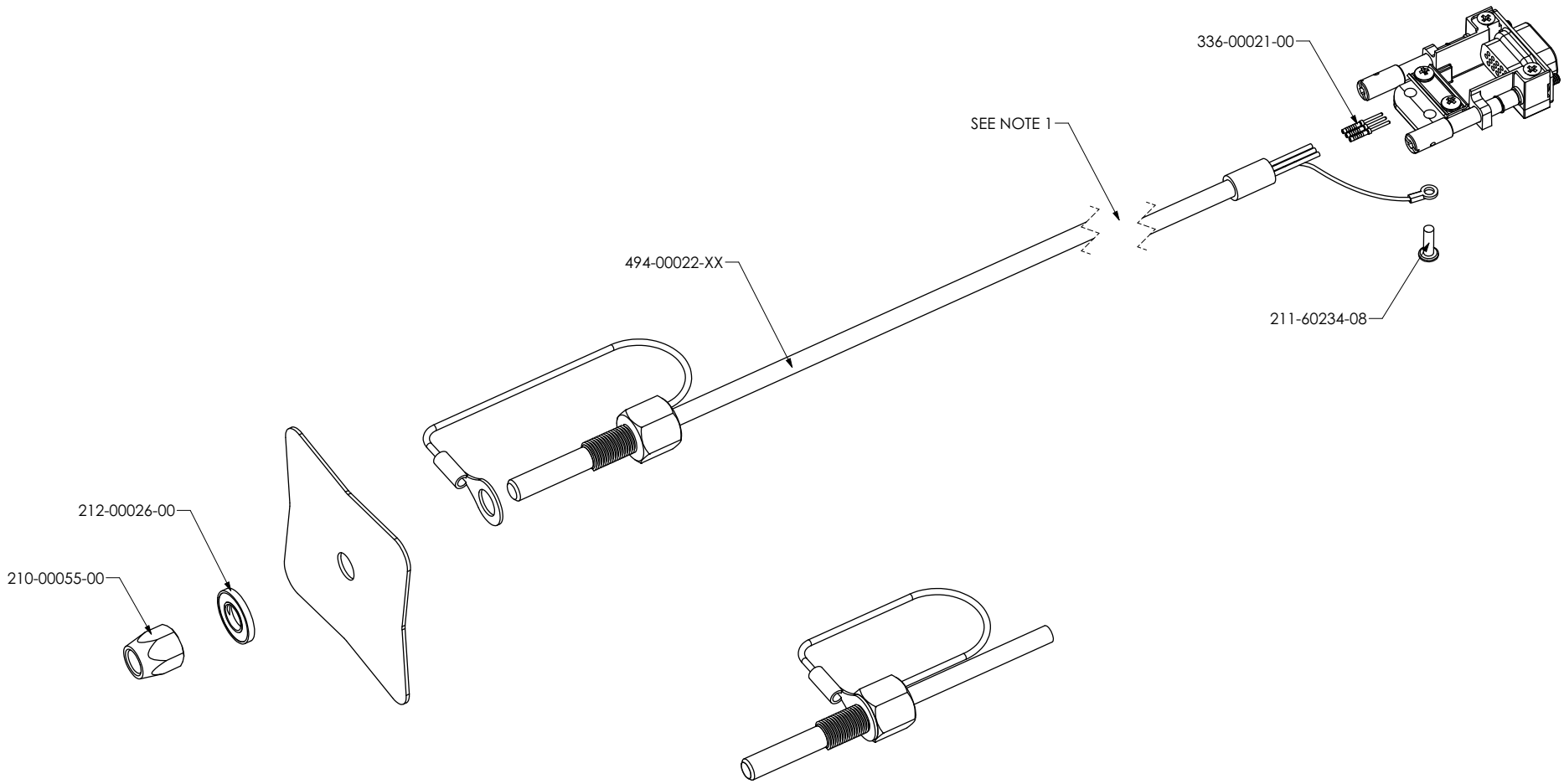

NOTES:

1. SUPPLIED CABLE LENGTH IS 10' +/- 6". CABLE MAY BE CUT TO NEEDED LENGTH OR LENGTHENED UP TO 25' (15' ADDITIONAL) AS NEEDED. USE THREE-WIRE TWISTED SHIELDED CABLING AND HIGH QUALITY CRIMPED OR SOLDERED CONNECTIONS FROM THE PROBE TO THE EXTENSION WIRE.

Figure 4-32 GTP 59 OAT Probe Installation Drawing

4.4.6 GMU 11 Magnetometer Installation

This section contains general information as well as installation information for the GMU 11. The guidelines presented in this section include requirements for proper location selection in the aircraft, requirements for supporting structure and mechanical alignment and restrictions on nearby equipment.

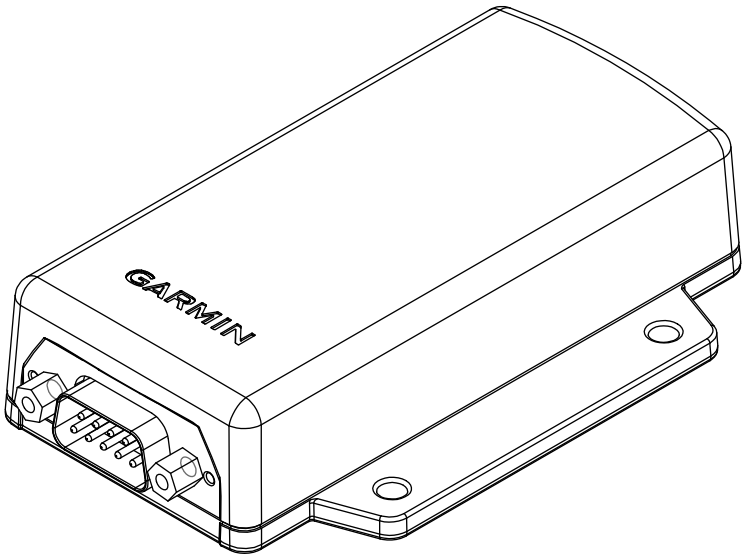

Figure 4-33 GMU 11 Unit View

4.4.6.1 Equipment Description

NOTE

The GSU 73 and GSU 75 are not compatible with the GMU 11 magnetometer. Installations that include a GSU 73/GSU 75 must also include a GMU 22/44(B) connected to the GSU 73/75.

The GMU 11 magnetometer is a remote mounted device that provides magnetic field measurement data to a GSU 25 ADAHRS. The ADAHRS and magnetometer replace traditional rotating mass instruments. AHRS combines the functions of a vertical and a directional gyro to provide measurement of roll, pitch, and heading angles.

The supply voltage for the GMU 11 comes from aircraft power (9-32 V 100 mA.)

4.4.6.2 Equipment Available

Table 4-18 GMU 11 Part Numbers

Model	Assembly P/N	Unit Only P/N	Installation Rack
GMU 11	010-01788-00	011-04349-00	No

Table 4-19 GMU 11 Accessories

Item	Garmin P/N	Quantity
GMU 11, Installation Kit	011-04349-90	1

Table 4-20 Contents of GMU 11 Installation Kit (P/N 011-04349-90)

Item	Garmin P/N	Quantity
Connector Kit, 9-pin, w/CAN Term	011-03002-00	1
Nut, Hex, Nylon Locking, 316SS/P, 6-32	210-10008-08	4
Screw, 6-32x.500, PHP, SS/P	211-60207-12	4
Washer, Flat, SAE, SS, #6	212-00024-06	4

4.4.6.3 Mounting Location

In general, wing mounting of the GMU 11 magnetometer is preferred. Fuselage mounting is less desirable because of numerous potential disturbances that interfere with accurate operation. If installed in the fuselage, the preferred location is the fuselage tail section. However, it must maintain a minimum of 2 feet of separation from the cabin or cargo compartments.

Level the GMU 11 to within 3.0° of the in-flight level cruise attitude. Per figure 4-36, align the GMU 11's forward direction to within 0.5° of the any of the four cardinal directions with relation between the connector and the nose of the aircraft. Make sure the bottom of the unit is facing downwards (towards earth) per figure 4-36.

CAUTION

It is critical that the GMU 11 unit be installed with the bottom of the unit facing downwards.

The GMU 11 is a sensitive three-axis magnetic sensor. It is more sensitive to nearby magnetic disturbances than a flux gate magnetometer. For this reason, when choosing a mounting location for the GMU 11, refer to table 4-21 which specifies recommended distances from objects or devices that can disturb the magnetic field.

NOTE

If the requirements listed in table 4-21 cannot be met, it is important a magnetometer interference test that exercises the offending interference source, must be successfully passed to ensure proper operation of the AXIS flight display system. See section 6 for more information.

Table 4-21 Recommended Distance from Magnetic Disturbances

Disturbance Source	Minimum Distance from GMU 11
Electric motors and relays, including servo motors	10 feet (3.0 meters)
Ferromagnetic structure greater than 1 kg total (iron, steel, or cobalt materials, especially landing gear structure)	8.2 feet (2.5 meters)
Ferromagnetic materials less than 1 kg total, such as control cables	3 feet (1.0 meter)
Any electrical device drawing more than 100 mA current	3 feet (1.0 meter)
Electrical conductors passing more than 100 mA current [(should be twisted shielded pair if within 10 feet (3.0 meters)]	3 feet (1.0 meter)
Electrical devices drawing less than 100 mA current	2 feet (0.6 meter)
Magnetic measuring device other than another GMU 11 (e.g. installed flux gates, even if not powered)	2 feet (0.6 meter)
Electrical conductors passing less than 100 mA current [(should be twisted shielded pair if within 10 feet (3.0 meters)]	1.3 feet (0.4 meter)

Make sure that any electrical conductor that comes within 10 feet (3.0 meters) of the GMU 11 is installed as a twisted shielded pair, not a single-wire conductor. (If possible, the shield should be grounded at both ends).

For installations with dual GMU 11 magnetometers, co-locating the two magnetometers close to each other in the tail or in one wing is recommended as this reduces the likelihood of heading splits or miscompares when operating on the ground in the vicinity of local magnetic anomalies.

4.4.6.3.1 Considerations for Wing Grounded Lighting Fixtures

The following installation practices are recommended if the GMU 11 is mounted in the wing.

The wing tip lights should not have a power ground referenced to the chassis of the light assembly that would then be referenced back to the airframe ground using the light assembly mounting.

A dedicated power ground should be used and returned as a twisted pair with the power source back into the fuselage for a wing mounted GMU 11.

These installation practices will prevent magnetically interfering currents from flowing in the wing skin that encloses the GMU 11. Electrically isolating the light assembly should not be used as an alternative to the preceding consideration, unless the isolated light assembly has been analyzed for adequate protection against direct attachment of lightning.

4.4.6.4 Unit Installation

CAUTION

Do not use a magnetic screwdriver to install or service the GMU 11.

The following guidelines describe proper mechanical installation of the Garmin GMU 11 Magnetometer.

After evaluation of the mounting location has been completed and verifying that requirements are met, install the unit assemblies. Fabrication of a wiring harness is required. Sound mechanical and electrical methods and practices are required for installation of the GMU 11. Refer to section 4.1 for wiring considerations and to section A.4 for pinouts.

Mount the GMU 11 in its mounting location, taking care to tighten the mounting screws firmly. Use of non-magnetic tools (e.g. beryllium copper or titanium) is recommended when installing or servicing the GMU 11.

Use nonmagnetic materials to mount the GMU 11, and replace any magnetic fasteners within 0.5 meter with nonmagnetic equivalents (e.g. replace zinc-plated steel screws used to mount wing covers or wing tips with nonmagnetic stainless steel screws).

Mechanical mounting fixtures for the GMU 11 must be rigidly connected to the aircraft structure. Use of typical aircraft-grade non-magnetic materials and methods for rigid mounting of components is acceptable, so long as adequate measures are taken to provide a stiffened mounting structure.

4.4.6.5 General Specifications

Table 4-22 GMU 11 Power and Current

LRU	Supply Voltage	Current Draw
GMU 11	14/28 VDC	0.1 A (100 mA)

Table 4-23 GMU 11 Dimensions and Weights

LRU	Width	Height	Depth	Unit Weight	Weight of Unit and Connector(s)
GMU 11	2.74 inches (69.6 mm)	0.93 inches (23.6 mm)	3.78 inches (96.0 mm)	0.16 lbs (0.0725 kg)	0.302 lbs (0.136 kg)

4.4.6.6 Outline and Installation Drawings

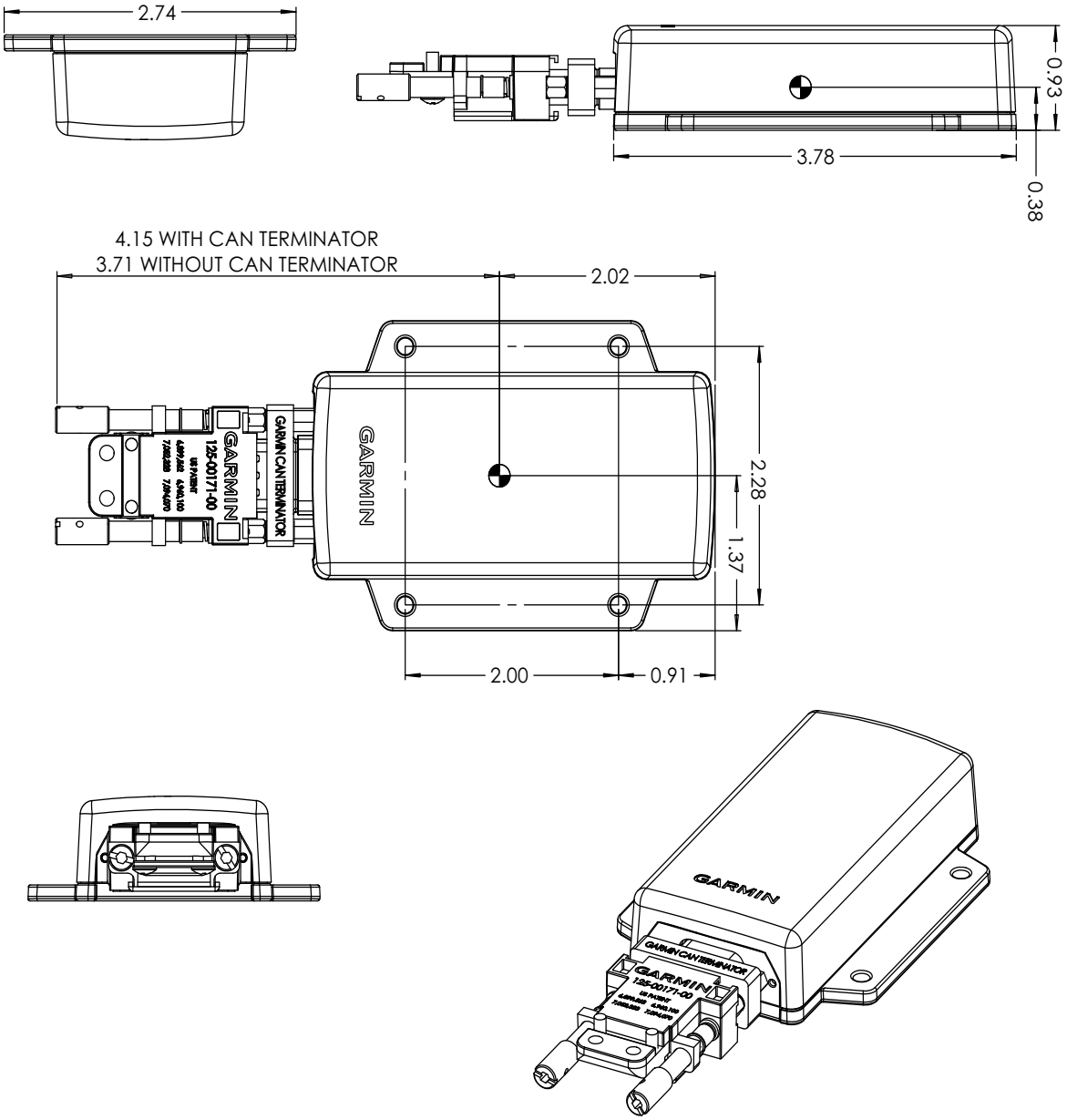

Figure 4-34 GMU 11 Outline Drawing

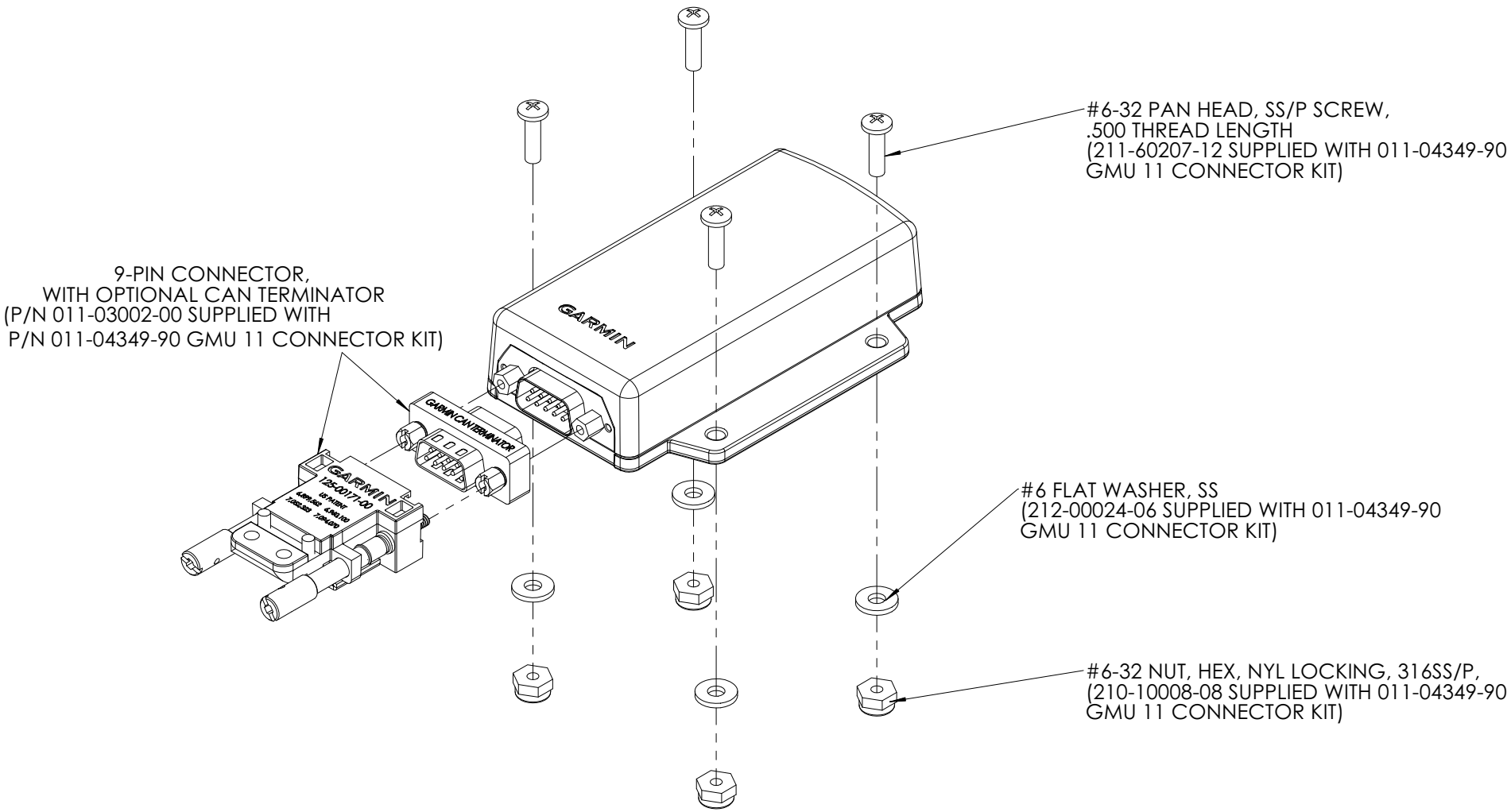

Figure 4-35 GMU 11 Installation Drawing

GMU 11 INSTALLATION ORIENTATIONS

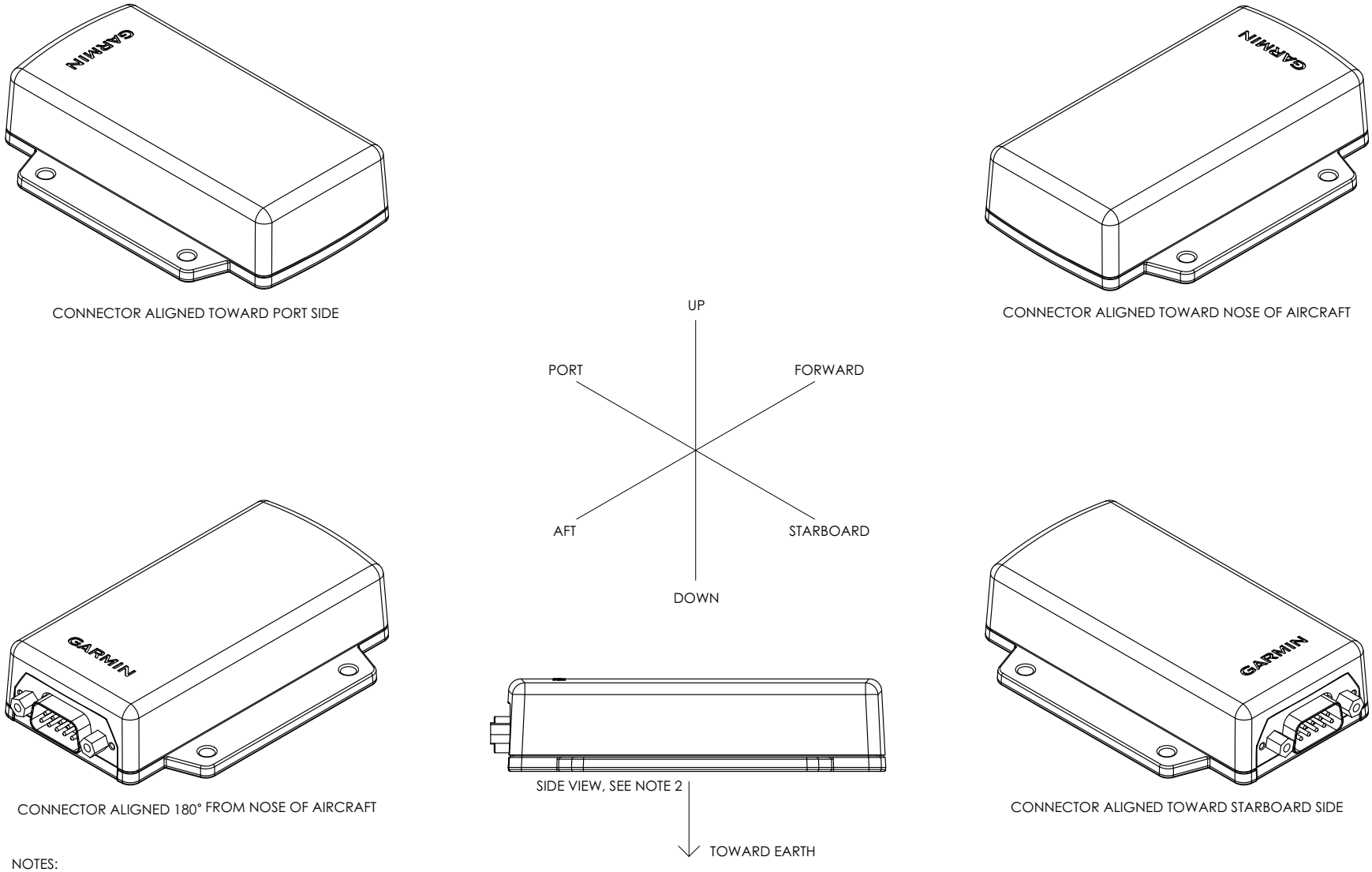

NOTES:
1. ALIGN THE GMU 11 CONNECTOR TO WITHIN 0.5° TO ANY OF THE 4 AIRCRAFT AXIS SHOWN.
2. THE GMU 11 MUST BE MOUNTED SUCH THAT THE BOTTOM OF THE UNIT IS FACING THE EARTH.

Figure 4-36 GMU 11 Orientation Drawing

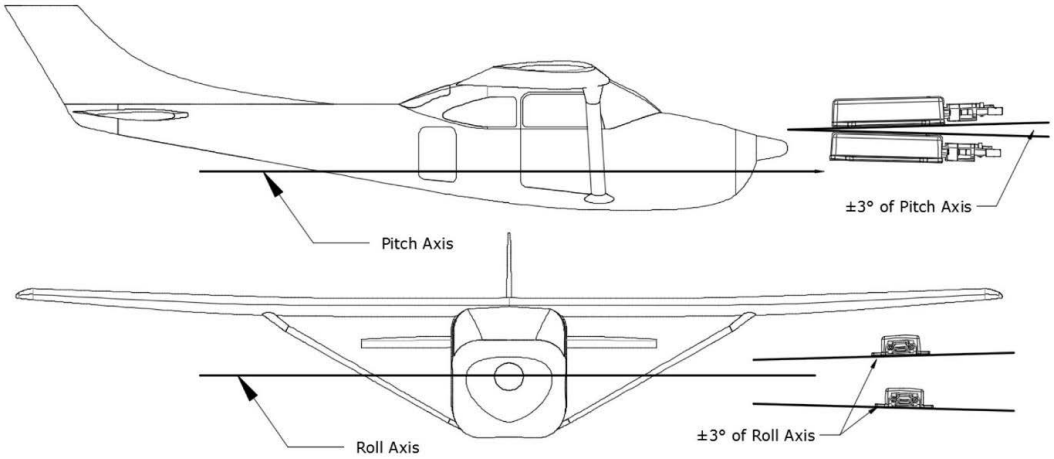

Figure 4-37 GMU 11 Pitch and Roll Requirements

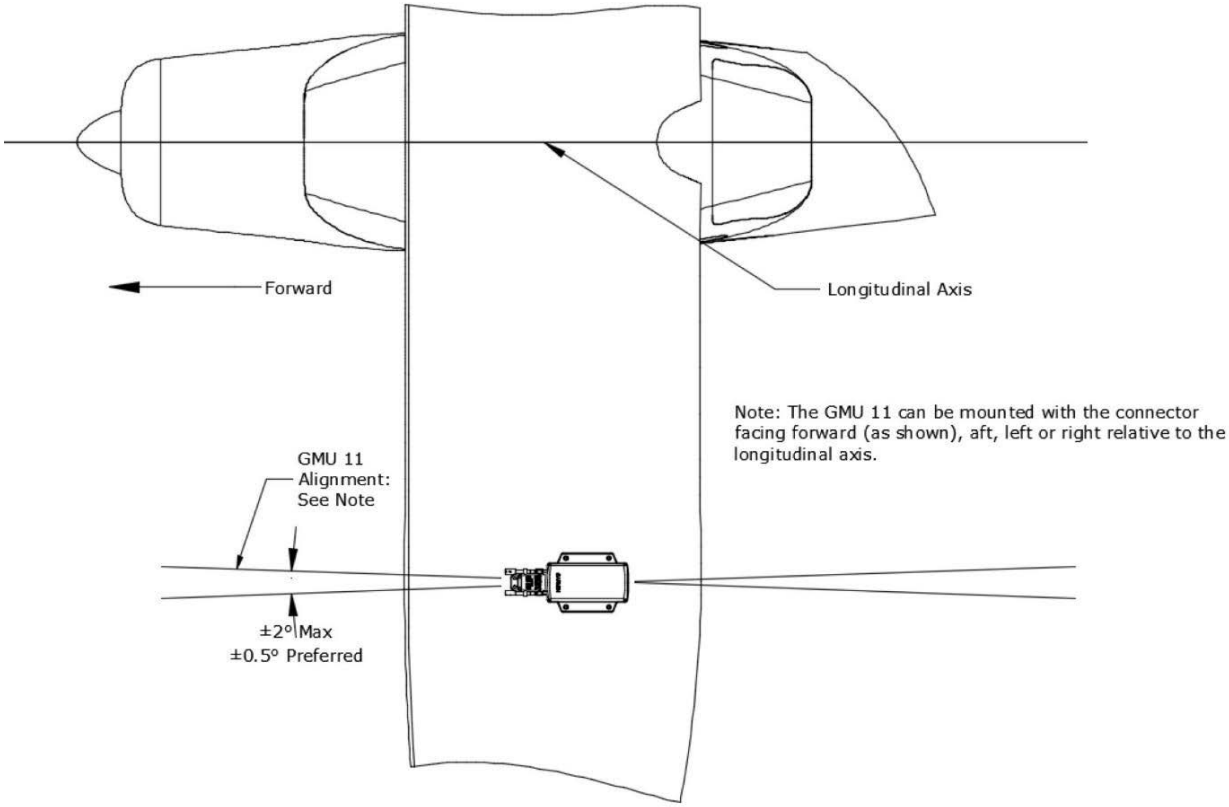

Figure 4-38 GMU 11 Heading Alignment Requirement

4.4.7 GMU 22/44(B) Magnetometer Installation

This section contains general information as well as installation information for the GMU 22/44(B). The guidelines presented in this section include requirements for proper location selection in the aircraft, requirements for supporting structure and mechanical alignment and restrictions on nearby equipment.

NOTE

In a system with more than one ADAHRS (GSU 25/73), ADAHRS 1 must be connected to a magnetometer. Installing additional magnetometer units for other GSU 25 ADAHRS units is optional. Each GSU 75 installed requires a dedicated GMU 22/44(B).

Figure 4-39 GMU 22 Unit View

Figure 4-40 GMU 44(B) Unit View

4.4.7.1 Equipment Description

The GMU 22/44(B) magnetometer is a remote mounted device that provides magnetic field data to Garmin ADAHRS devices. The Garmin ADAHRS and magnetometer replace traditional rotating mass instruments.

An AHRS combines the functions of a vertical gyro and a directional gyro to provide measurement of roll, pitch, and heading angles. The ADAHRS and magnetometer replace traditional rotating mass instruments.

Using long-life solid-state sensing technology, the GMU 22/44(B) Magnetometer uses magnetic field measurements to create an electronically stabilized AHRS.

The GMU 22/44(B) magnetometer provides magnetic information to support the function of the ADAHRS (GSU 25/73/75). The ADAHRS (GSU 25/73/75) provides operating voltage to the GMU 22/44(B) Magnetometer.

4.4.7.2 Equipment Available

Table 4-24 GMU 22/44(B) Part Numbers

Model	Unit Only Part Number
GMU 22	011-03269-00
GMU 44(B)	011-04201-00

Table 4-25 GMU 22 Accessories

Item	Garmin P/N	Quantity
GMU 22, Connector Kit	011-00871-10	1
GMU 22 Universal Mount	011-01779-01	1 (optional)
Installation Rack, GMU 22	115-00481-10	1

Table 4-26 GMU 44(B) Accessories

Item	Garmin P/N	Quantity
GMU 44(B), Connector Kit	011-04205-00	1
GMU 44(B) Universal Mount	011-01779-01	1 (optional)
Installation Rack, GMU 44(B)	125-00437-00	1

Table 4-27 GMU 44(B) Connector Kit Contents (P/N 011-04205-00)

Item	Garmin P/N	Quantity
Screw,6-32x.250,PHP,BR,w/Nylon	211-60037-08	3
Conn,Rcpt,WTW,D369 Series,6 Position, Socket Insert	330-01430-01	1
Strain Relief,D369 Series,6-position	330-90056-06	1
Contact, Socket, Mil Crimp, Size 22	336-00055-00	6

4.4.7.3 Mounting Locations

In general, wing mounting of the GMU 22/44(B) magnetometer is preferred. Fuselage mounting is less desirable because of numerous potential disturbances that interfere with accurate operation. If installed in the fuselage, the preferred location is the fuselage tail section. However, it must maintain a minimum of two feet of separation from the cabin or cargo compartments.

Level the GMU 22/44(B) to within 3.0° of the in-flight level cruise attitude. Align the GMU 22/44(B) mounting rack's forward direction to within 0.5° of the longitudinal axis of the aircraft.

The GMU 22/44(B) is a sensitive three-axis magnetic sensor. It is more sensitive to nearby magnetic disturbances than a flux gate magnetometer. For this reason, when choosing a mounting location for the GMU 22/44(B), refer to table 4-28 which specifies recommended distances from objects or devices that can disturb the magnetic field.

NOTE

If the requirements listed in table 4-28 cannot be met, it is important a magnetometer interference test that exercises the offending interference source, must be successfully passed to ensure proper operation of the AXIS flight display system. Refer to section 6 for more information.

Table 4-28 Recommended Distance from Magnetic Disturbances

Disturbance Source	Minimum Distance from GMU 22/44(B)
Electric motors and relays, including servo motors	10 feet (3.0 meters)
Ferromagnetic structure greater than 1 kg total (iron, steel, or cobalt materials, especially landing gear structure)	8.2 feet (2.5 meters)
Ferromagnetic materials less than 1 kg total, such as control cables	3 feet (1.0 meter)
Any electrical device drawing more than 100 mA current	3 feet (1.0 meter)
Electrical conductors passing more than 100 mA current [(should be twisted shielded pair if within 10 feet (3.0 meters)]	3 feet (1.0 meter)
Electrical devices drawing less than 100 mA current	2 feet (0.6 meter)
Magnetic measuring device other than another GMU 22 (e.g. installed flux gates, even if unpowered)	2 feet (0.6 meter)
Electrical conductors passing less than 100 mA current [(should be twisted shielded pair if within 10 feet (3.0 meters)]	1.3 feet (0.4 meter)

Make sure that any electrical conductor that comes within 10 feet (3.0 meters) of the GMU 22/44(B) is installed as a twisted shielded pair, not a single-wire conductor. If possible, the shield should be grounded at both ends.

4.4.7.3.1 Consideration for Wing Grounded Lighting Fixtures

The following installation practices are recommended if the required GMU 22/44(B) mounting bracket is located in the wing.

The wing tip lights should not have a power ground referenced to the chassis of the light assembly that would then be referenced back to the airframe ground using the light assembly mounting.

A dedicated power ground should be used and returned as a twisted pair with the power source back into the fuselage for a wing mounted GMU 22/44(B).

These installation practices will prevent magnetically interfering currents from flowing in the wing skin that encloses the GMU 22/44(B). Electrically isolating the light assembly should not be used as an alternative to the preceding consideration, unless the isolated light assembly has been analyzed for adequate protection against direct attachment of lightning.

4.4.7.4 Unit Installation

CAUTION

Use of non-magnetic tools (e.g. beryllium copper or titanium) is required when installing or servicing the GMU 22/44(B).

NOTE

If the GMU 22/44(B) is ever removed, the anti-rotation properties of the mounting screws must be restored and must be brass. This may be done by replacing the screws with new Garmin P/N 211-60037-08. If original screws must be re-used, coat screw threads with Loctite 242 (blue) thread-locking compound, Garmin P/N 291-00023-02, or equivalent.

The following guidelines describe proper mechanical installation of the Garmin GMU 22/44(B) Magnetometer.

Use nonmagnetic materials to mount the GMU 22/44(B), and replace any magnetic fasteners within 0.5 meter with nonmagnetic equivalents (e.g. replace zinc-plated steel screws used to mount wing covers or wing tips with nonmagnetic stainless steel screws).

Mechanical mounting fixtures for the GMU 22/44(B) must be rigidly connected to the aircraft structure. Use of typical aircraft-grade non-magnetic materials and methods for rigid mounting of components is acceptable, so long as adequate measures are taken to provide a stiffened mounting structure.

4.4.7.4.1 Unit Installation for GMU 22/44

After evaluation of the mounting location has been completed and verifying that requirements are met, assemble the GMU 22/44 mounting plate kits according to the dimensions given in figure 4-41. Install the unit assemblies.

Mount the GMU 22/44 to its mounting plate, taking care to tighten the mounting screws firmly.

4.4.7.4.2 Unit Installation for GMU 44(B)

The GMU 44(B) offers flexibility in installation. Combined with the GMU 44(B) install rack, it allows for heading and level alignments.

A custom bracket can be fabricated in lieu of using the GMU 44(B) universal mount. The bracket must be fabricated in accordance with the requirements applicable to the replacement equipment shelf detailed in figure 4-48 and be a minimum of 0.032" thick. The GMU 44(B) install rack must be installed regardless of whether the GMU 44(B) universal mount or custom bracket is used.

4.4.7.5 General Specifications

Table 4-29 GMU 22 Power and Current

LRU	Supply Voltage	Current Draw
GMU 22	12 VDC (from GSU 25/GSU 73)	Included in GSU 25/GSU 73 current draw

Table 4-30 GMU 22 Dimensions and Weights

LRU	Width	Height	Depth	Unit Weight	Weight of Unit and Connector(s)
GMU 22	N/A	2.10 inches (53.3 mm)	3.37 inches (85.6 mm) Diameter	0.35 lbs (0.158 kg)	0.50 lbs (0.226 kg)

Table 4-31 GMU 44(B) Weight and Size

Item	Weight lb. (kg)	Dimensions in. (mm)		
		Height	Diameter	Flange
GMU 44(B) unit only (P/N 011-04201-00)	0.30 (0.14)	1.49 (37.8)	Ø2.27 (57.6)	Ø3.30 (83.8)
GMU 44(B) with install rack and connector	0.39 (0.18)			

4.4.7.6 Outline and Installation Drawings

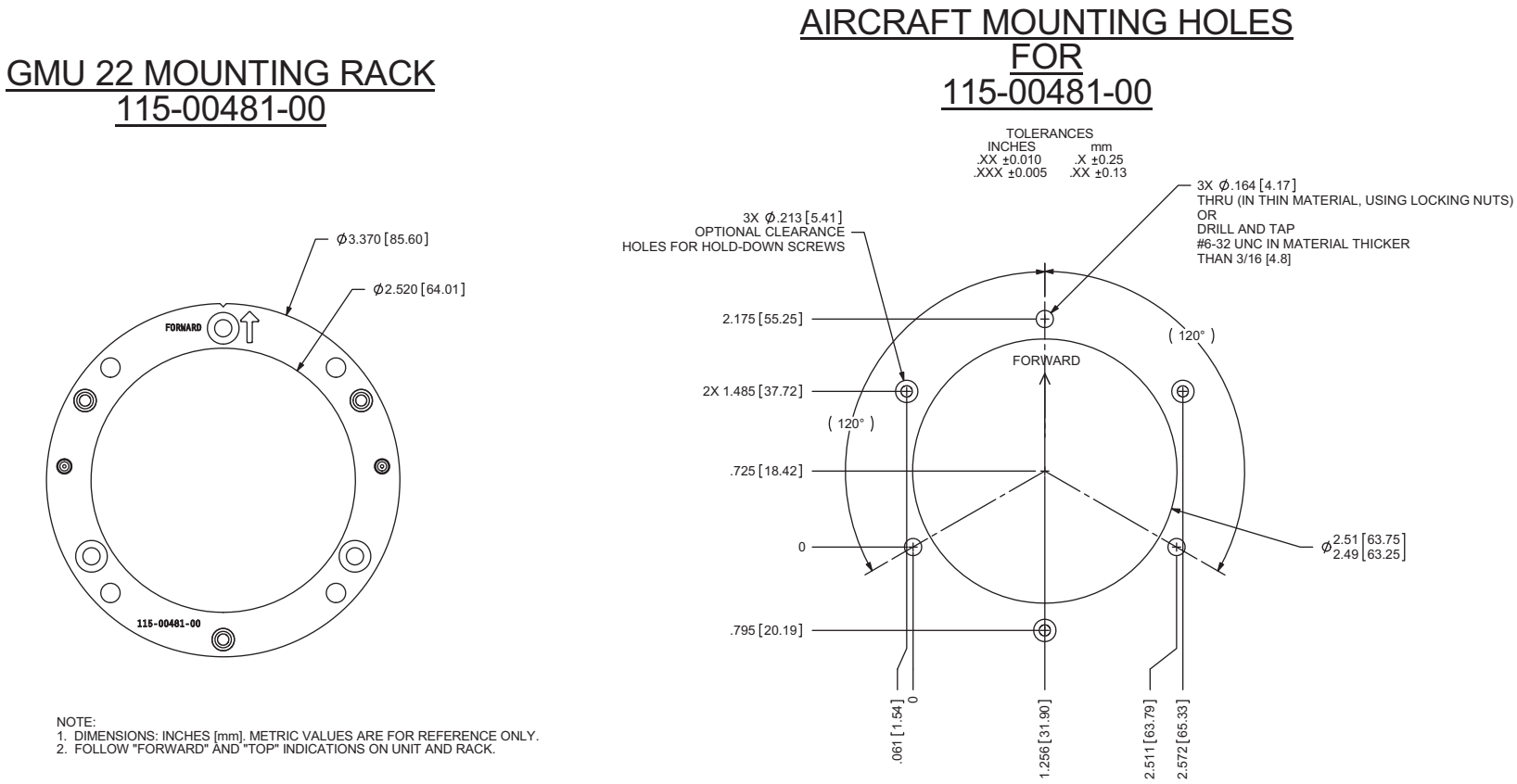

Figure 4-41 GMU 22 Mounting Rack (P/N 115-00481-00)

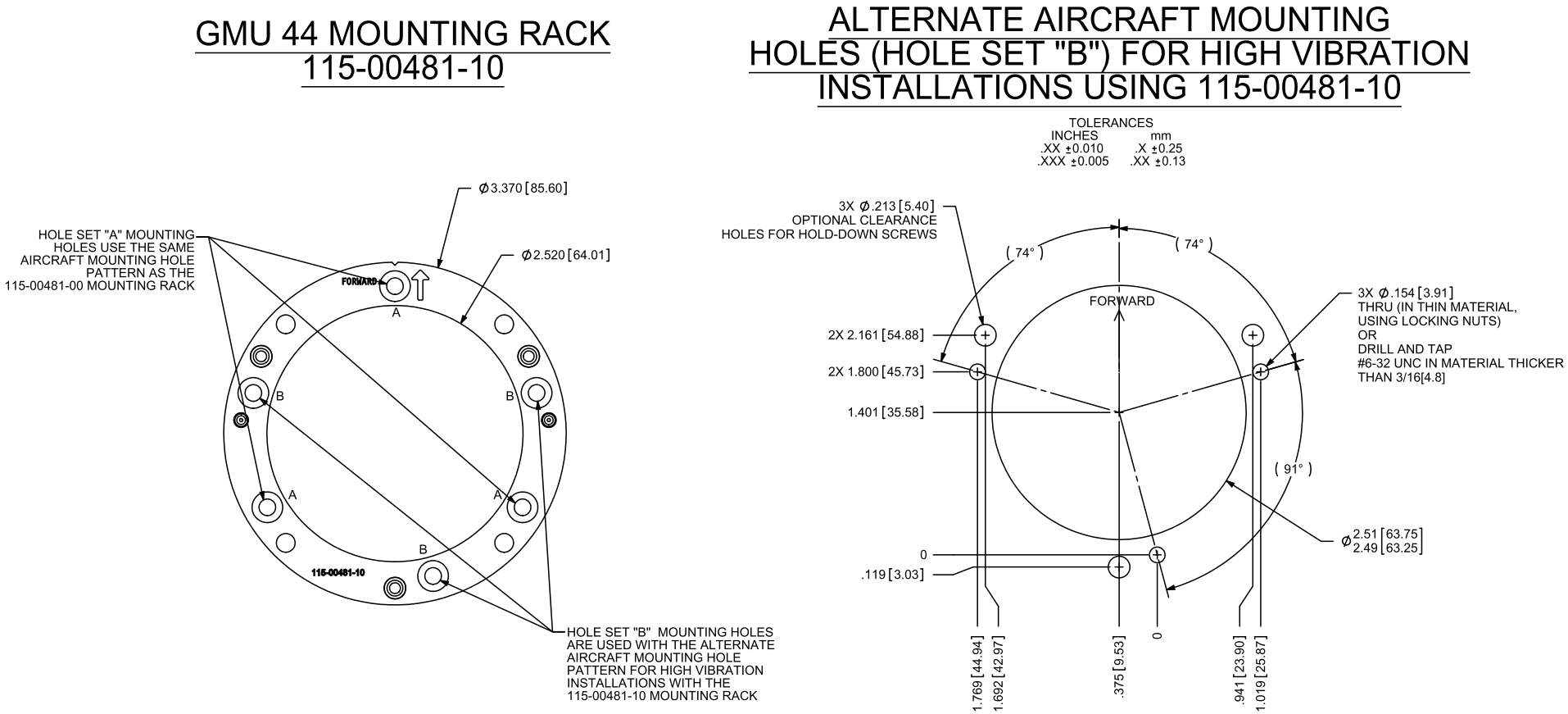

NOTE:
1. DIMENSIONS: INCHES [mm]. METRIC VALUES ARE FOR REFERENCE ONLY.
2. FOLLOW "FORWARD" AND "TOP" INDICATIONS ON UNIT AND RACK.
3. REFERENCE THE GMU44 EQF (005-00164-31) FOR GUIDANCE ON GMU44 VIBRATION LEVELS.

Figure 4-42 GMU 22/44 Mounting Rack (115-00481-10)

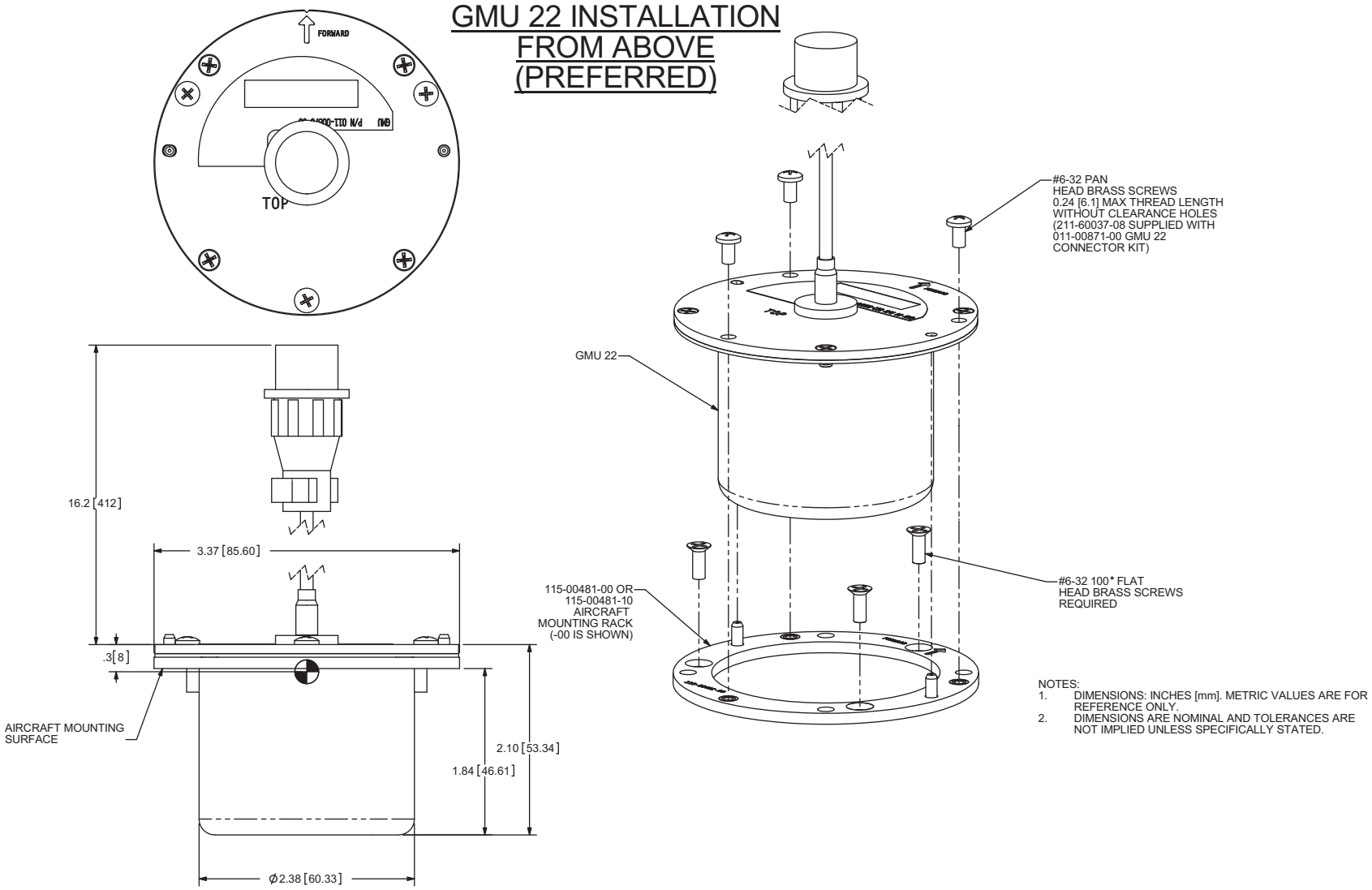

Figure 4-43 GMU 22 Top Mounted Installation

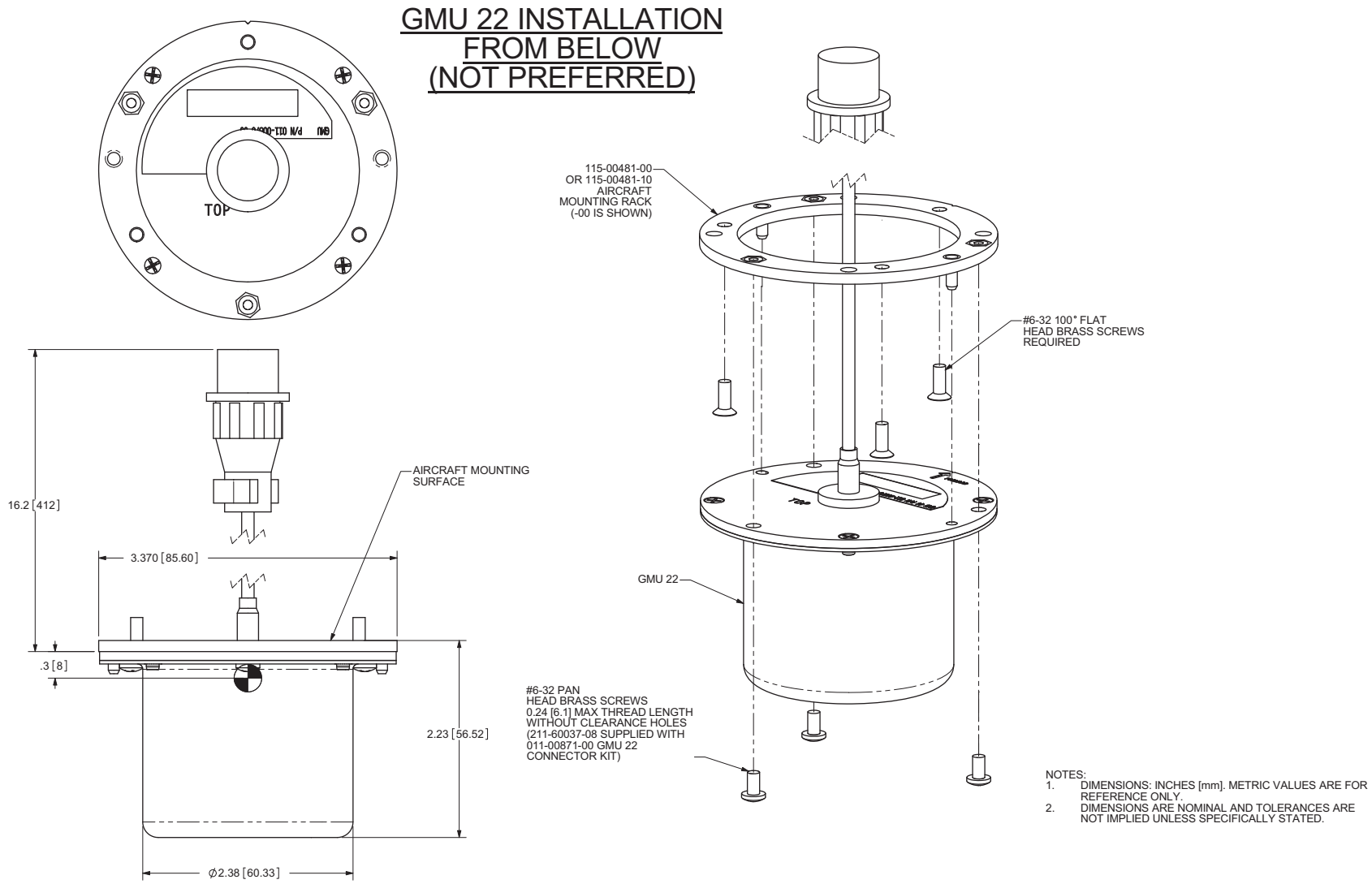

Figure 4-44 GMU 22 Bottom Mounted Installation

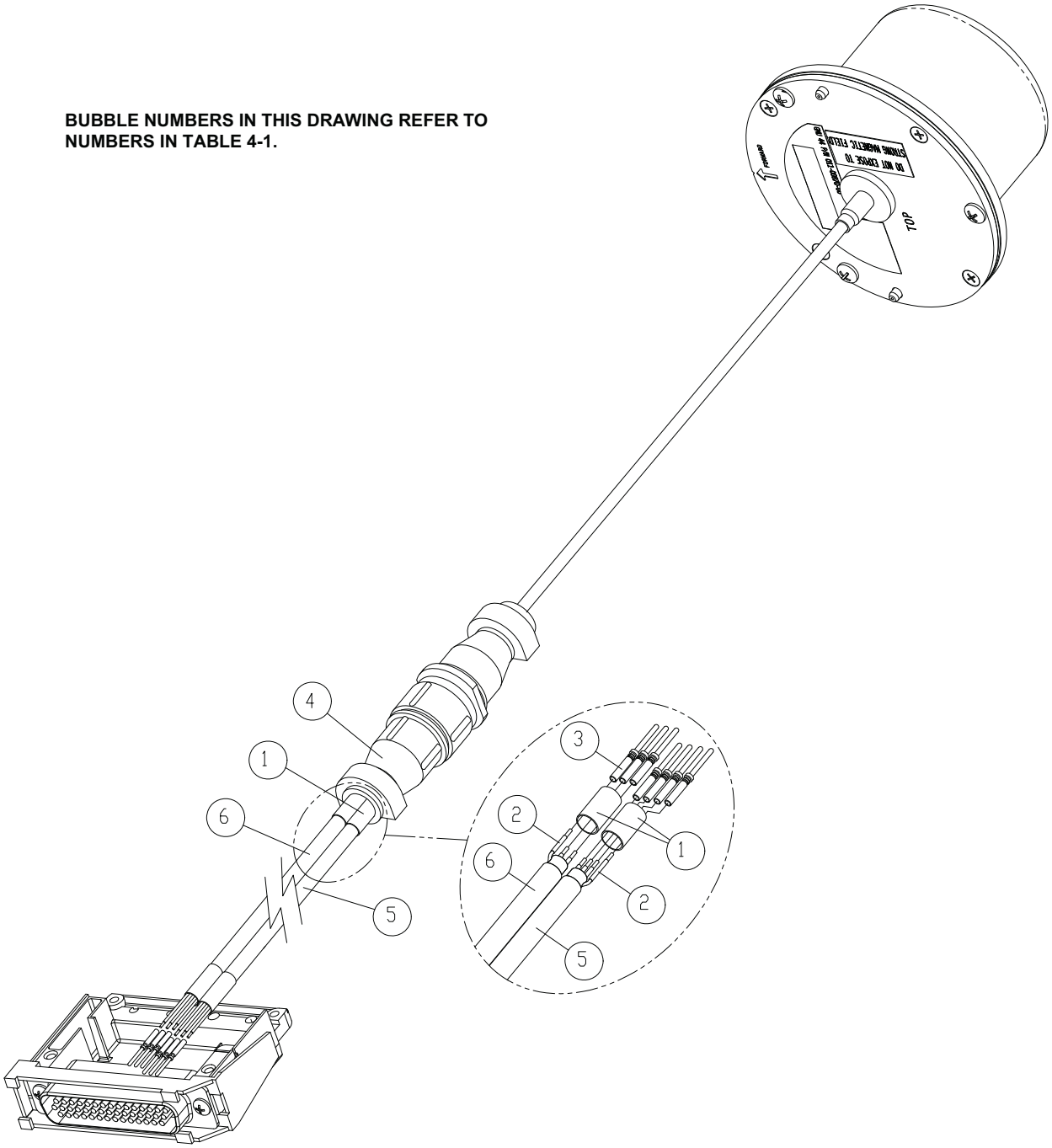

Figure 4-45 GMU 22 Wiring Details

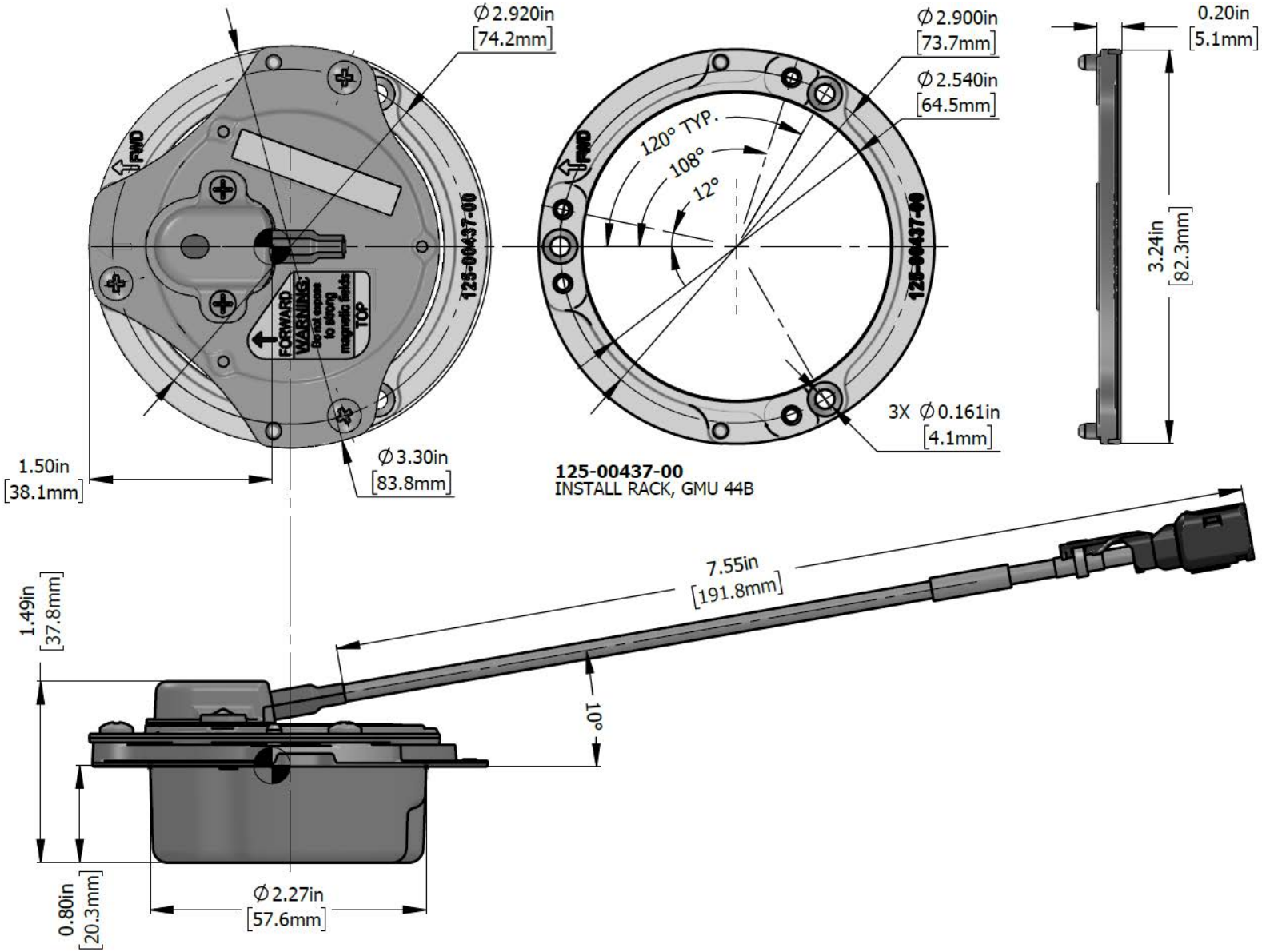

Figure 4-46 GMU 44(B) Dimensions (Shown with Rack)

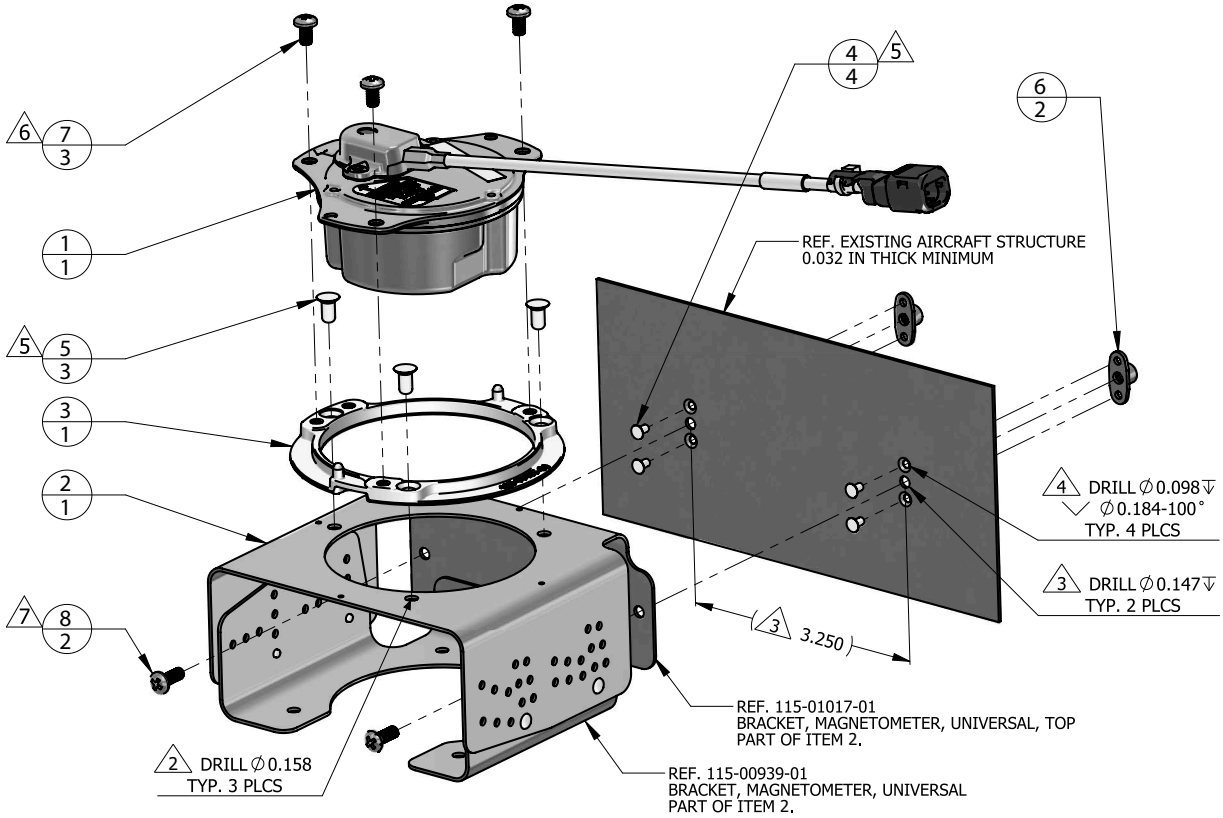

ITEM	DESCRIPTION	P/N	QTY
1	GMU 44B MAGNETOMETER	011-04201-00	1
2	GMU 44 UNIVERSAL MOUNT ASSEMBLY [KIT]	011-01779-01	1
3	INSTALL RACK, GMU 44B	125-00437-00	1
4	RIVET, SOLID, COUNTERSUNK 100 DEG, PRECISION HEAD, 3/32 IN OD, 3/16 IN LONG	MS20426AD3-3	4
5	RIVET, SOLID, COUNTERSUNK 100 DEG, PRECISION HEAD, 5/32 IN OD, 5/16 IN LONG	MS20426AD5-5	3
6	NUT, SELF-LOCKING, PLATE, TWO-LUG, REDUCED RIVET SPACING, LOW HEIGHT, STEEL, 0.138-32 UNJC-3B	MS21069L06	2
7	SCREW, MACHINE, PAN HEAD, CROSS-RECESSED, BRASS, 0.1380-32 UNC-2A, 0.25 IN LONG	MS35214-23	3
8	SCREW, MACHINE, PAN HEAD, CROSS-RECESSED, CORROSION RESISTANT STEEL, 0.1380-32 UNC-2A, 0.375 LONG	MS51957-28	2

Figure 4-47 GMU 44(B) Installation (Universal Mount Example)

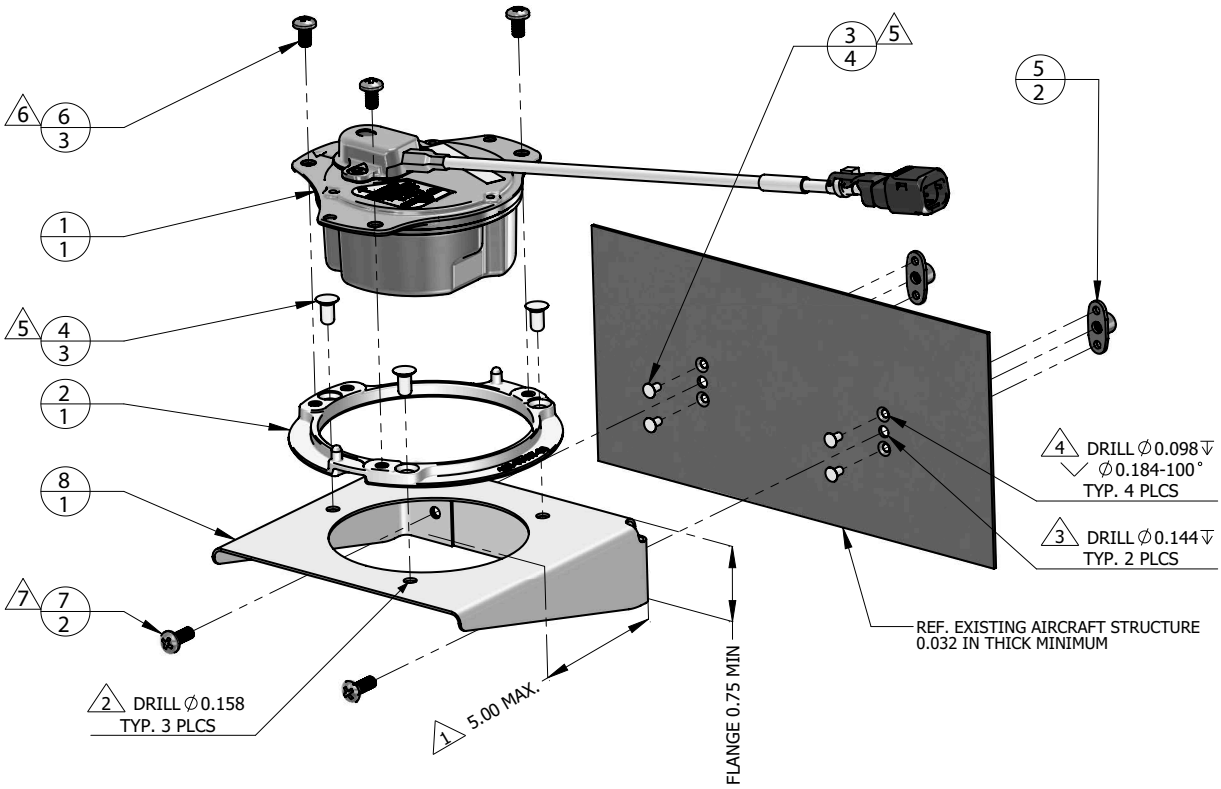

ITEM	DESCRIPTION	P/N	QTY
1	GMU 44B MAGNETOMETER	011-04201-00	1
2	INSTALL RACK, GMU 44B	125-00437-00	1
3	RIVET, SOLID, COUNTERSUNK 100 DEG, PRECISION HEAD, 3/32 IN OD, 3/16 IN LONG	MS20426AD3-3	4
4	RIVET, SOLID, COUNTERSUNK 100 DEG, PRECISION HEAD, 5/32 IN OD, 5/16 IN LONG	MS20426AD5-5	3
5	NUT, SELF-LOCKING, PLATE, TWO-LUG, REDUCED RIVET SPACING, LOW HEIGHT, STEEL, 0.138-32 UNJC-3B	MS21069L06	2
6	SCREW, MACHINE, PAN HEAD, CROSS-RECESSED, BRASS, 0.1380-32 UNC-2A, 0.25 IN LONG	MS35214-23	3
7	SCREW, MACHINE, PAN HEAD, CROSS-RECESSED, CORROSION RESISTANT STEEL, 0.1380-32 UNC-2A, 0.375 IN LONG	MS51957-28	2
8	BRACKET, GMU 44	—	1

Figure 4-48 GMU 44(B) Installation (Fabricated Bracket Example)

4.4.8 GEA 24 Engine Indication System Installation

NOTE

References to the GEA 24 throughout this manual apply equally to the GEA 24(B) except where specifically noted.

NOTE

If a GEA 24 is installed in a system that also includes a GSU 73, the GEA 24 must be configured as EIS #2 as described in section A.7.

This section contains general information as well as installation information for the GEA 24. Use this section to mount the GEA 24 unit.

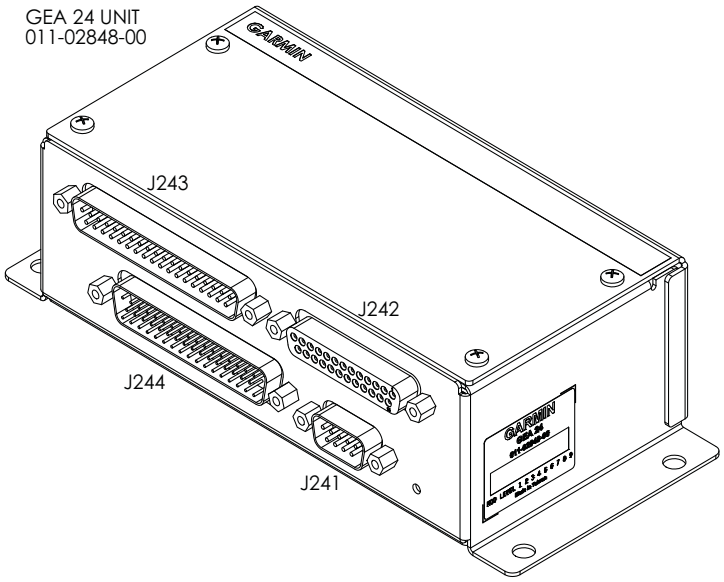

Figure 4-49 GEA 24 Unit View

4.4.8.1 Equipment Description

The GEA 24 is an input/output system used to monitor and power engine and airframe sensors. In an AXIS flight display system, two GEA 24 units may be installed to monitor and display engine data for twin-engine aircraft, or single-engine aircraft with more than six cylinders. The second GEA 24 must be configured as EIS #2 as described in section A.7.

The GEA 24 connects to other LRUs in the AXIS flight display system using the CAN bus. To provide an optional redundant path for engine data, a secondary RS-232 connection to a single GDU is also supported.

- 9-pin network-power connector
- 50-pin miscellaneous connector for airframe sensors
- 25-pin thermocouple input connector
- 37-pin miscellaneous connector (for airframe sensors) will provide for the following input/output functionality:
  - Configure analog, digital, and discrete I/O capability
  - Output digital measurement of analog input resistive sensors
  - Output digital measurement of analog input voltages
  - Output digital state of discrete input sources
  - Output frequency measurement of digital input sources
  - Control of discrete annunciator outputs

4.4.8.2 Required Equipment

Table 4-32 GEA 24 Part Numbers

Model	Assembly Part Number	Unit Only Part Number
GEA 24	010-01042-00	011-02848-00
GEA 24(B)	010-02770-00	011-05991-00

NOTE

Refer to appendix J for information regarding swapping GEA 24 and GEA 24(B) units.

4.4.8.3 Additional Equipment Required

Table 4-33 lists the content of the GEA 24 Connector Kit, which is required to install the unit. Use of the CAN Termination Kit is detailed in section 3.2.2.

Table 4-33 Contents of GEA 24 Connector Kit (P/N 011-02886-00)

Item	Garmin P/N	Quantity
Backshell w/hardware, jackscrew, 9/15 Pin	011-01855-00	1
Backshell w/hardware, jackscrew, 25/44 Pin	011-01855-02	1
Backshell w/hardware, jackscrew, 37/62 Pin	011-01855-03	1
Backshell w/hardware, jackscrew, 50/78 Pin	011-01855-04	1
CAN termination kit	011-02887-00	1
Conn, Plug, D-Sub, Crimp Pin, Commercial, 25 CKT	330-00624-25	1
Conn, Rcpt, D-Sub, Crimp Socket, Commercial, 09 CKT	330-00625-09	1
Conn, Rcpt, D-Sub, Crimp Socket, Commercial, 37 CKT	330-00625-37	1
Conn, Rcpt, D-Sub, Crimp Socket, Commercial, 50 CKT	330-00625-50	1
Contact, Socket, Military Crimp, Size 20	336-00022-02	100
Contact Pin, Military Crimp, Size 20	336-00024-00	30

4.4.8.4 Mounting Requirements

CAUTION

Do not mount the GEA 24 on the 'hot' side (engine side) of the firewall, or in any location where it would be exposed to radiated heat from the engine.

The GEA 24 will mount remotely. Secure the GEA 24 to the airframe using four #10-32 pan or hex head screws supplied by the installer.

The GEA 24 must not be placed directly below fluid lines (e.g., fuel lines, oil or hydraulic lines). It also must be installed as far away as practical from heat sources.

4.4.8.5 Unit Installation

Fabrication of a wiring harness is required. Sound mechanical and electrical methods and practices are recommended for installation of the GEA 24. Refer to section 4.1.2 for wiring considerations, and to section A.7 for pinouts.

1. Mount the unit to a suitable mounting location using (4) #10-32 pan or hex head screws.
2. Assemble the connector backshells and wiring harness.
3. Connect CAN terminator to unit if required.
4. Connect backshell connectors.

4.4.8.6 General Specifications

Table 4-34 GEA 24 Power and Current

LRU	Supply Voltage	Current Draw
GEA 24	14 VDC	0.43 Amp max (typical external sensor loading)
	28 VDC	0.21 Amp max (typical external sensor loading)

Table 4-35 GEA 24 Dimensions and Weights

LRU	Width	Height	Depth	Unit Weight	Weight of Unit and Connector(s)
GEA 24 (EIS)	6.5 inches (165.1 mm)	1.9 inches (48.3 mm)	3.0 inches (76.2 mm) 5.0 inches (127.0 mm) w/connectors	0.71 lbs (0.322 kg)	1.6 lbs, (0.725 kg)

4.4.8.7 Outline and Installation Drawings

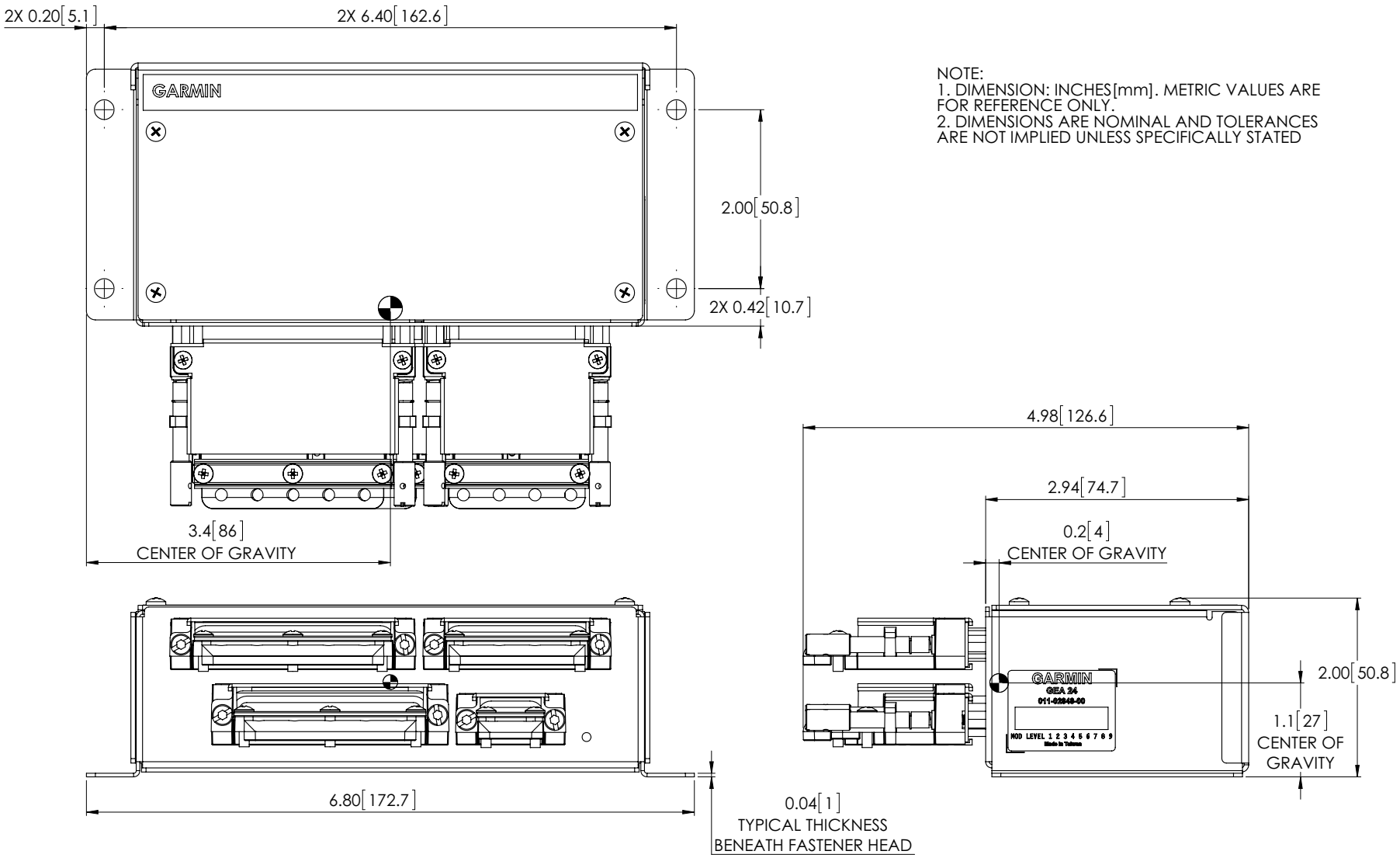

Figure 4-50 GEA 24 Outline Drawing

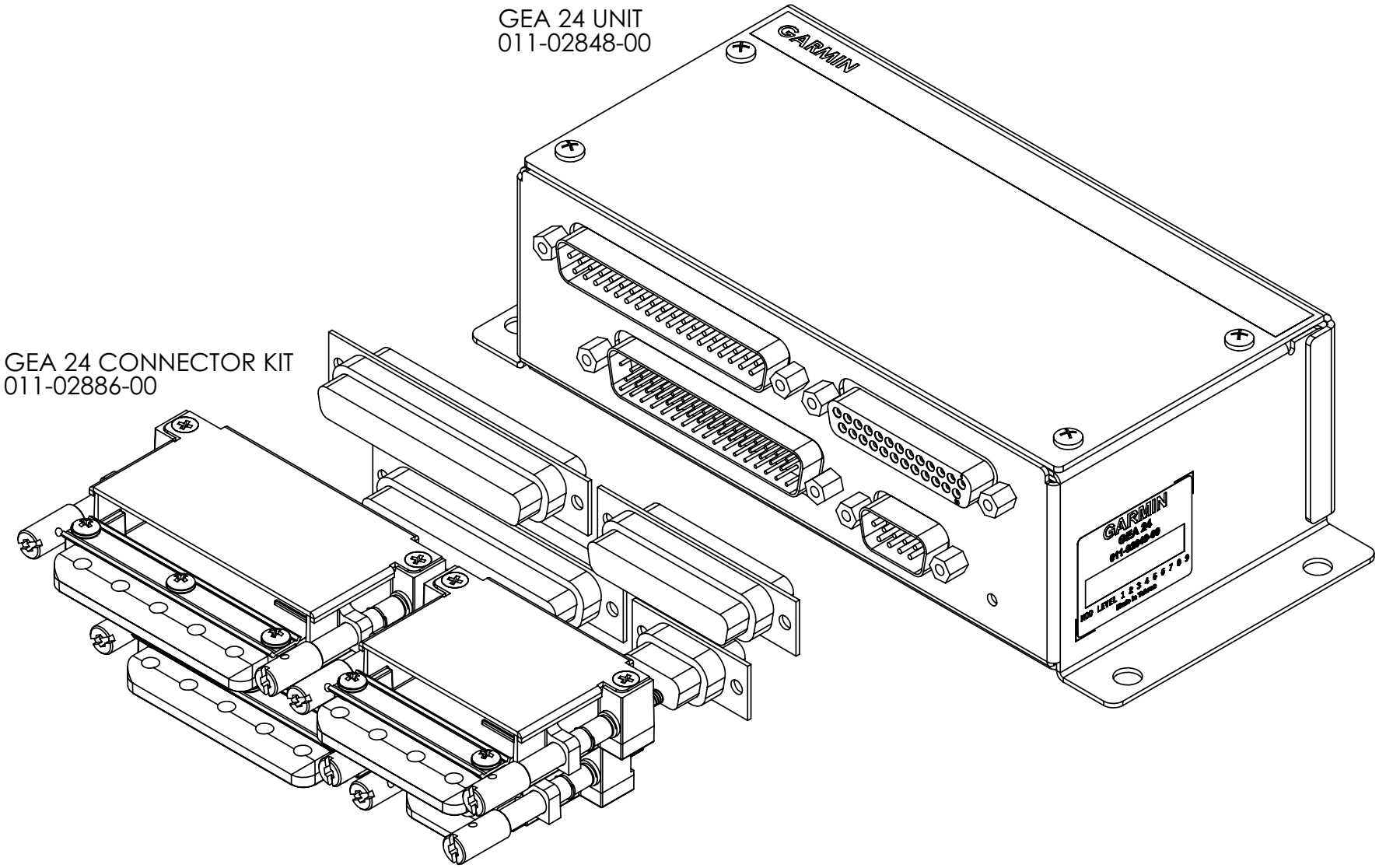

Figure 4-51 GEA 24 Assembly Drawing without CAN Bus Terminator

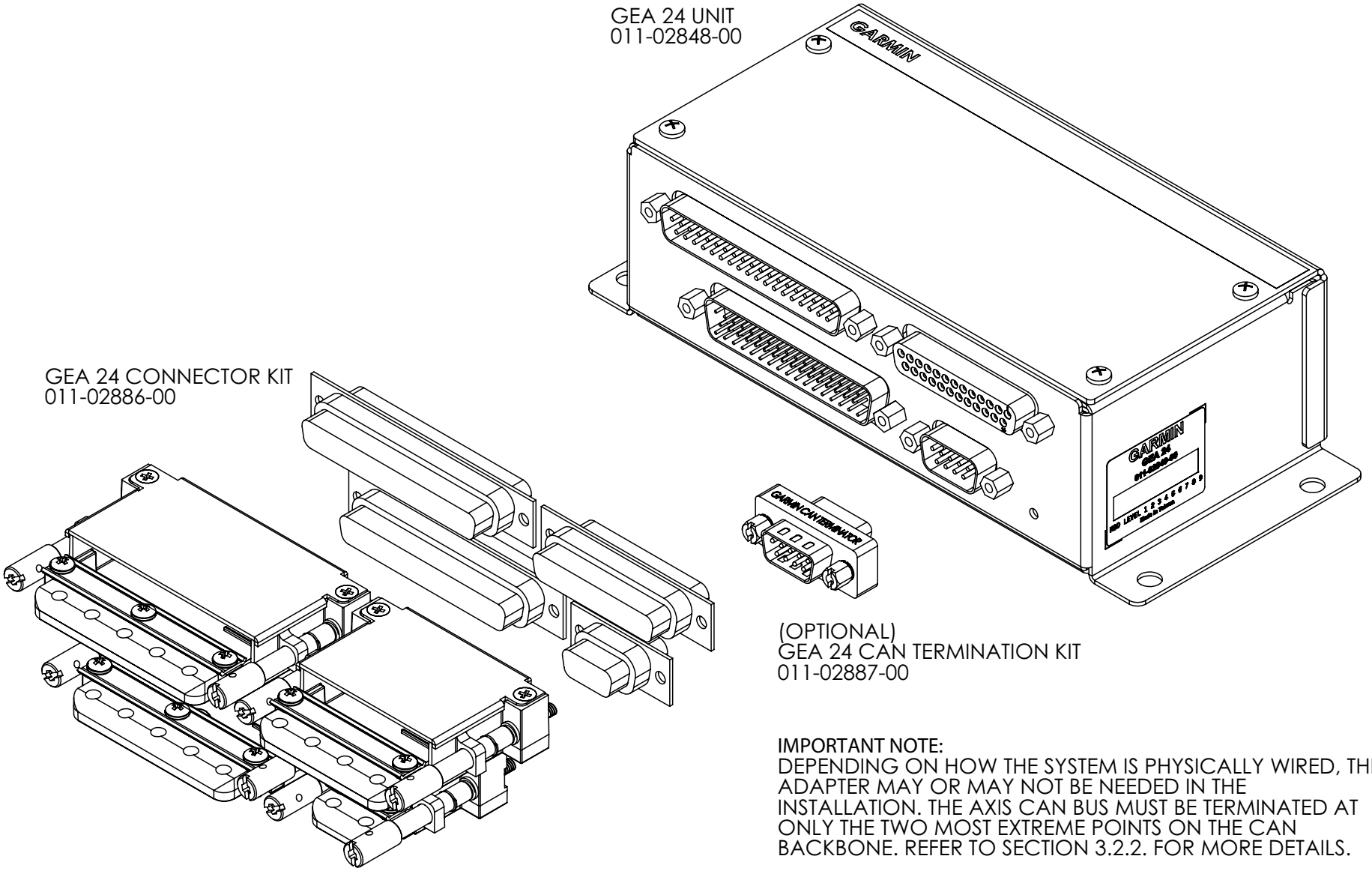

IMPORTANT NOTE:
DEPENDING ON HOW THE SYSTEM IS PHYSICALLY WIRED, THIS ADAPTER MAY OR MAY NOT BE NEEDED IN THE INSTALLATION. THE AXIS CAN BUS MUST BE TERMINATED AT ONLY THE TWO MOST EXTREME POINTS ON THE CAN BACKBONE. REFER TO SECTION 3.2.2. FOR MORE DETAILS.

Figure 4-52 GEA 24 Assembly Drawing with CAN Bus Terminator

4.4.9 GMC 507 Autopilot Controller Installation

This section contains general information as well as installation information for the optional GMC 507. Use this section to mount the GMC 507 unit.

NOTE

Additional information relating to the installation to the remaining autopilot components can be found in section 4.4.10.

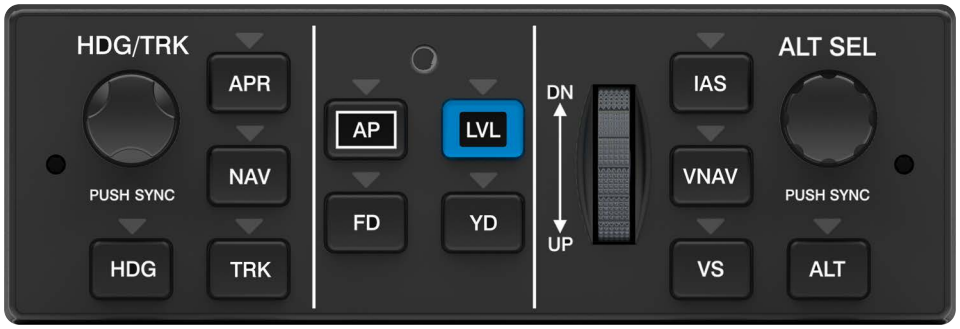

Figure 4-53 GMC 507 Unit View (-00 version)

4.4.9.1 Equipment Description

The GMC 507 is a Garmin Automatic Flight Control System (AFCS) Mode Controller that can be used in an AXIS flight display installation. The GMC 507 provides a user interface for the autopilot function of the AXIS flight display system. Up to two GMC 507 Mode Controllers may be installed.

4.4.9.2 Equipment Available

The GMC 507 is available by the part numbers listed in table 4-36.

Table 4-36 Available LRU Part Numbers

LRU	Assembly Part Number	Unit Only Part Number
GMC 507	010-01946-00	011-04548-00

The GMC 507 Connector Kit (table 4-37) is required to install the unit, and is not provided with the 011-04548-00 unit part number.

Table 4-37 Contents of Connector Kit (P/N 011-01824-01)

Item	Garmin P/N	Quantity
Backshell w/Hdw, jackscrew, 9/15 Pin	011-01855-00	1
Connector, Male, High Density D-Sub,15 CKT	330-00366-15	1
Contact, Pin, Military Crimp, Size 22D	336-00021-00	15

The GMC 507 installation rack is an optional dedicated installation rack for the GMC 507, especially useful for radio stack installations.

Table 4-38 GMC 507 Installation Rack Kit (P/N 010-12700-10)

Item	Garmin P/N	Quantity
GMC 507 Installation Rack	115-02774-00	1

4.4.9.3 Unit Installation

The GMC 507 mounts flush to the aircraft instrument panel using two pawl latches or may be mounted in the radio stack using the optional mounting rack listed in table 4-38.

4.4.9.3.1 Panel Cutout Installation

CAUTION

Exercise caution when installing the rack in the instrument panel. Deformation of the rack will make it difficult to install and remove the GMC 507.

NOTE

If the front edges of the installation rack are behind the front surface of the aircraft panel, the GMC 507 pawl latches may not fully engage.

NOTE

The GMC 507 install rack may be used as a template for drilling the mounting holes.

1. Per figure 4-54, make sure the pawl latch fasteners are fully retracted and in the vertical position.
2. Insert the unit into the instrument panel cutout so the backside of the bezel rests against the instrument panel. Orient the install rack as shown in figure 4-60.
3. Using a 3/32" hex drive tool turn each of the two pawl latches clockwise until tightened to 20 +/-2 in-lbs. When tightened, the pawl latches are in the horizontal position (refer to figure 4-54).

4.4.9.3.1.1 Panel Cutout Template

Figure 4-58 can be used as a template when marking the panel for cutout. Dimensions on the figure are to verify accuracy of printout only, refer to figure 4-57 for complete cutout dimensions. A .dxf version of the drawing is also available for download at https://support.garmin.com/support/manuals.

4.4.9.3.2 Radio Stack Installation

The GMC 507 Install Rack (P/N 115-02774-00) is to be used when installing the GMC 507 unit into a radio stack. Figure 4-61 shows the various radio stack cutout configurations that will accommodate the Install Rack.

1. Make sure the left and right front edges of the install rack are flush with the front surface of the instrument panel.
2. Secure the install rack to a rigid, primary aircraft structure using (qty. 4) #6 100° flat head machine screws as noted in figure 4-59. The screws are inserted from the inside of the installation rack and may be secured using self-locking hex nuts on the outside.
3. With the pawl latch fasteners retracted, insert the GMC 507 into the Install Rack until the bezel contacts the front edges of the Install Rack.
4. Using a 3/32" hex drive tool turn each of the two pawl latches clockwise until tightened to 20 +/-2 in-lbs. When tightened, the pawl latches are in the horizontal position (refer to figure 4-54).

CAUTION

To remove the GMC from the instrument panel, turn each of the two pawl latches counterclockwise. After initially breaking the pawl latch loose, continue to loosen while not exceeding 15 in-lbs of torque.

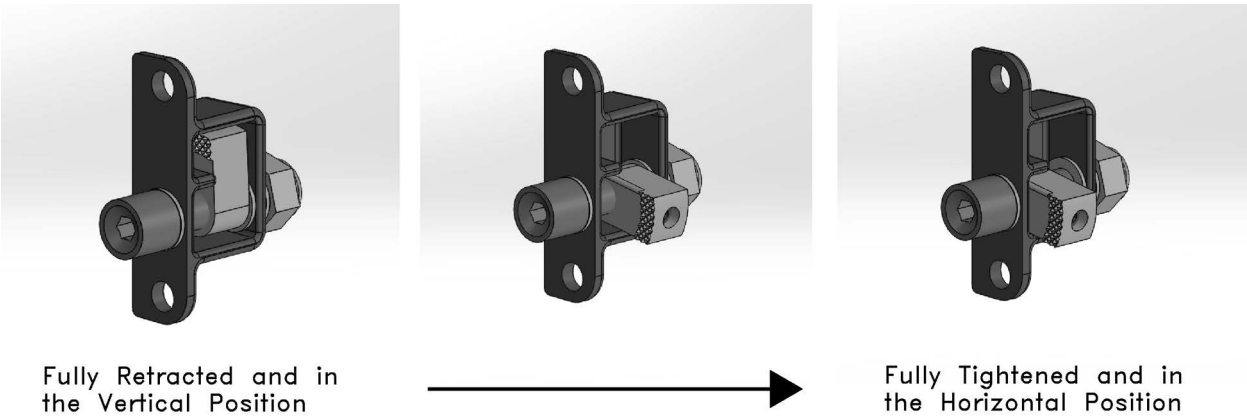

Figure 4-54 Pawl Latch

4.4.9.4 General Specifications

Table 4-39 GMC 507 Power and Current

LRU	Supply Voltage	Current Draw
GMC 507	14 VDC	0.20 A (200 mA)
	28 VDC	0.11 A (110 mA)

Table 4-40 GMC 507 Dimensions and Weights

LRU	Width	Height	Depth	Unit Weight	Weight of Unit and Connector(s)
GMC 507 (Mode Controller)	6.25 inches (158.8 mm)	2.10 inches (53.3 mm)	2.61 inches (66.3 mm)	0.68 lbs (0.308 kg)	0.78 lbs, (0.354 kg)

4.4.9.5 Outline and Installation Drawings

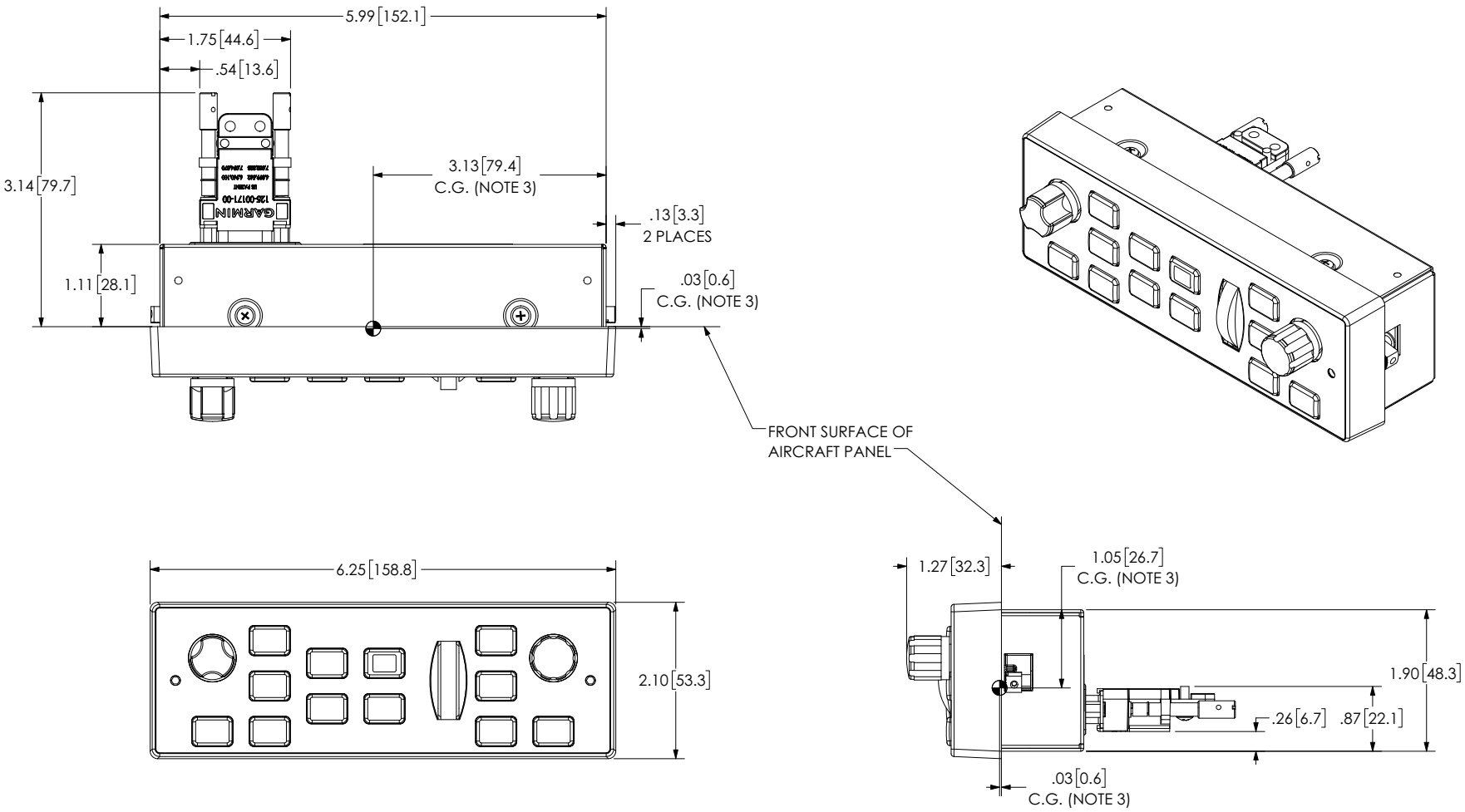

NOTES:
1. DIMENSIONS: INCHES[mm]. METRIC VALUES ARE FOR REFERENCE ONLY.
2. DIMENSIONS ARE NOMINAL AND TOLERANCES ARE NOT IMPLIED UNLESS SPECIFICALLY STATED.
3. CENTER OF GRAVITY (C.G.) LOCATION IS WITHOUT CONNECTOR KIT INSTALLED.

Figure 4-55 GMC 507 Outline Drawing without Installation Rack

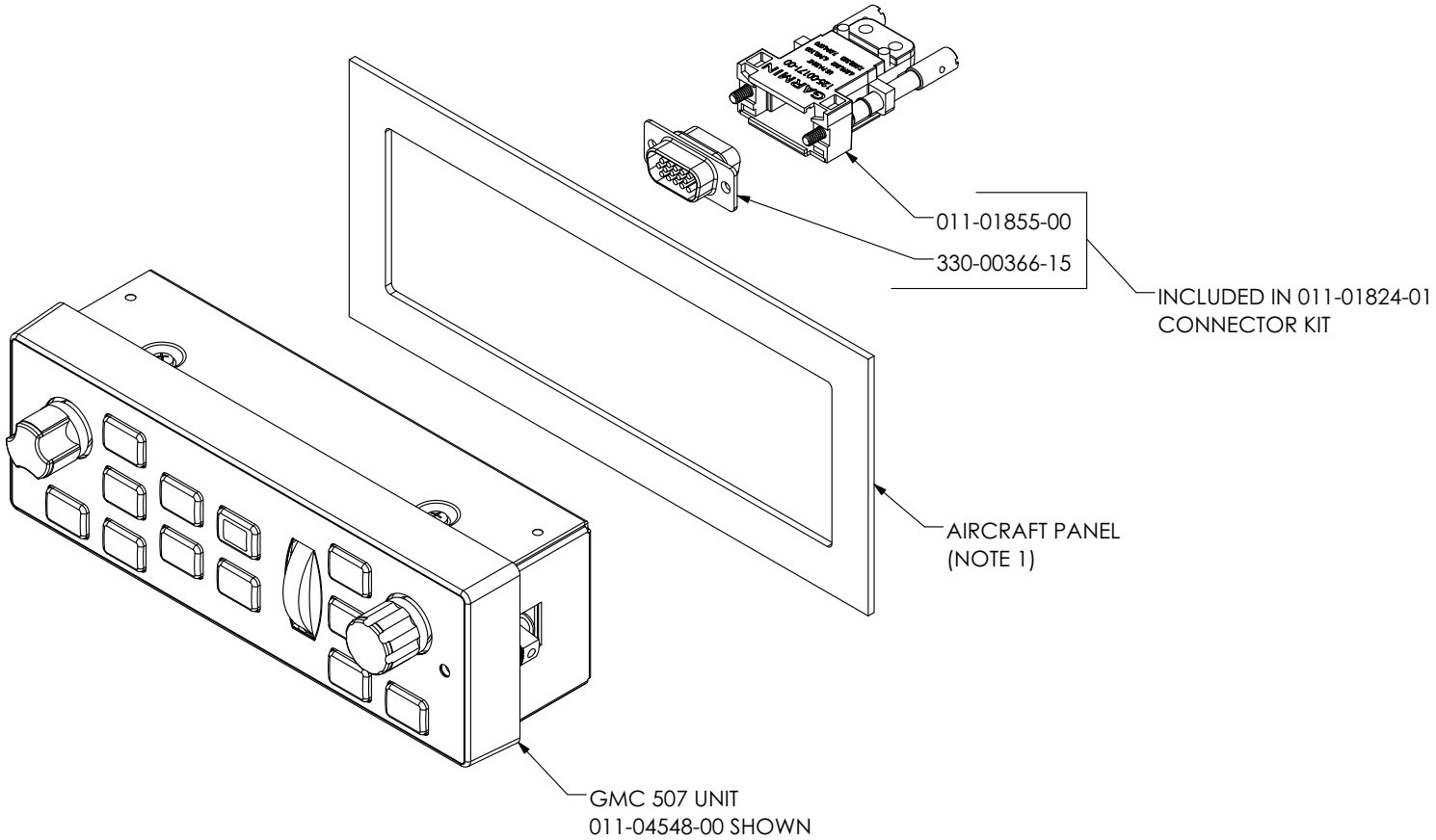

INSTALLATION NOTES:

1. THE PAWL LATCH FASTENERS WILL ACCOMMODATE PANEL THICKNESSES FROM .075[1.91] TO .140[3.56] THICK AND REQUIRE NO ADDITIONAL MOUNTING HARDWARE.
2. THE FASTENERS ARE ENGAGED AND DISENGAGED BY USE OF A 3/32" HEX TOOL.
3. TORQUE FASTENERS TO 20±2 IN-LBS ON INSTALLATION.
4. TO DISENGAGE THE UNIT, ROTATE FASTENERS CCW. DO NOT EXCEED 15 IN-LBS OF TORQUE.

Figure 4-56 GMC 507 Installation Drawing without Installation Rack

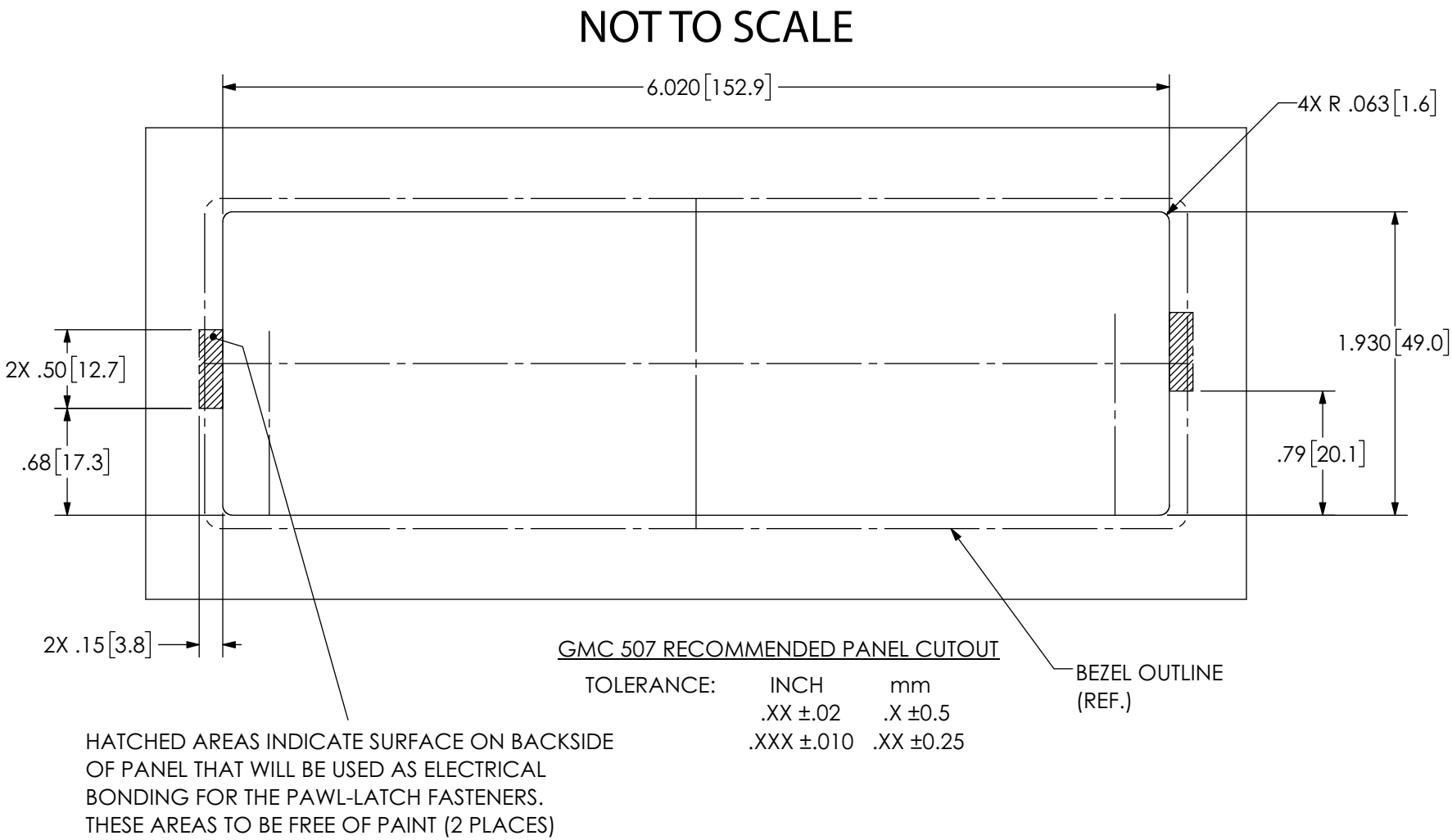

Figure 4-57 GMC 507 Cutout Drawing without Installation Rack

GMC 507 PANEL CUTOUT

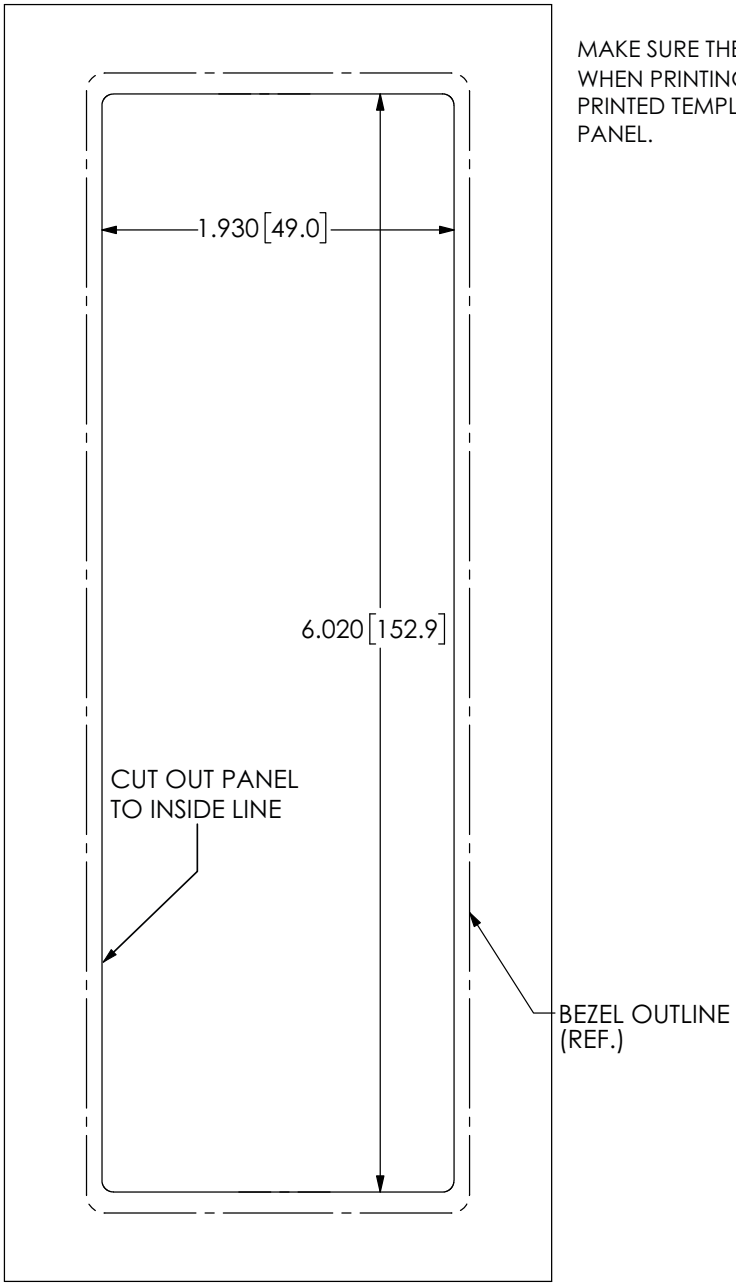

IMPORTANT!
MAKE SURE THE PAGE SCALING SETTING IS SET TO NONE WHEN PRINTING THIS PAGE. VERIFY DIMENSIONS OF PRINTED TEMPLATE ARE ACCURATE BEFORE CUTTING PANEL.

NOTES:
1. DIMENSIONS: INCHES [mm]. METRIC VALUES ARE FOR REFERENCE ONLY.
2. TOLERANCES: INCH mm
.XX ±.02 .X ±0.5
.XXX ±.010 .XX ±0.25

Figure 4-58 GMC 507 Panel Cutout Template without Installation Rack

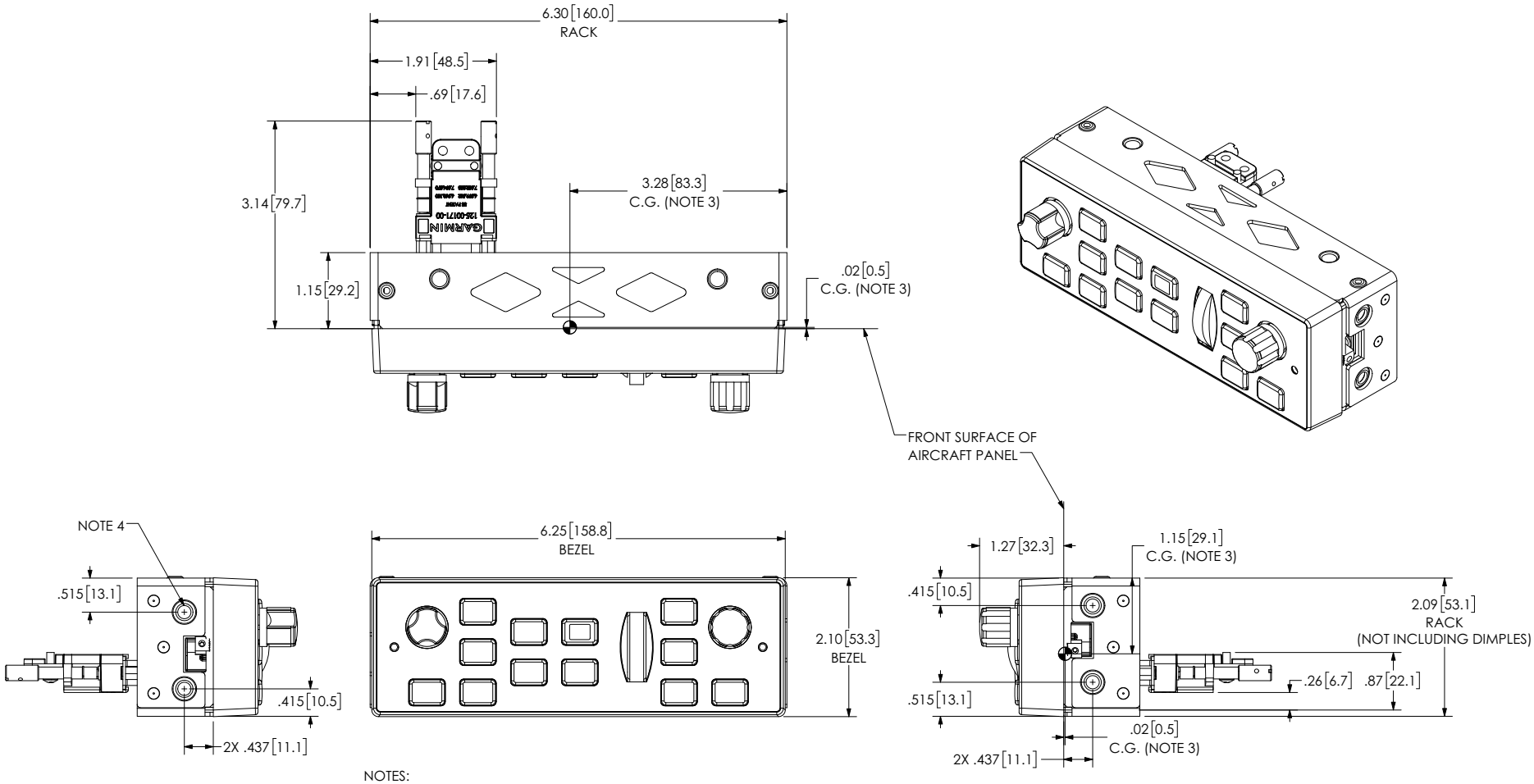

NOTES:

1. DIMENSIONS: INCHES[mm]. METRIC VALUES ARE FOR REFERENCE ONLY.
2. DIMENSIONS ARE NOMINAL AND TOLERANCES ARE NOT IMPLIED UNLESS SPECIFICALLY STATED.
3. CENTER OF GRAVITY (C.G.) LOCATION IS WITHOUT CONNECTOR KIT INSTALLED.
4. MOUTING HOLES ARE FOR #6 FLAT HEAD 100° CSK SCREWS (4 PLACES)

Figure 4-59 GMC 507 Outline Drawing with Installation Rack

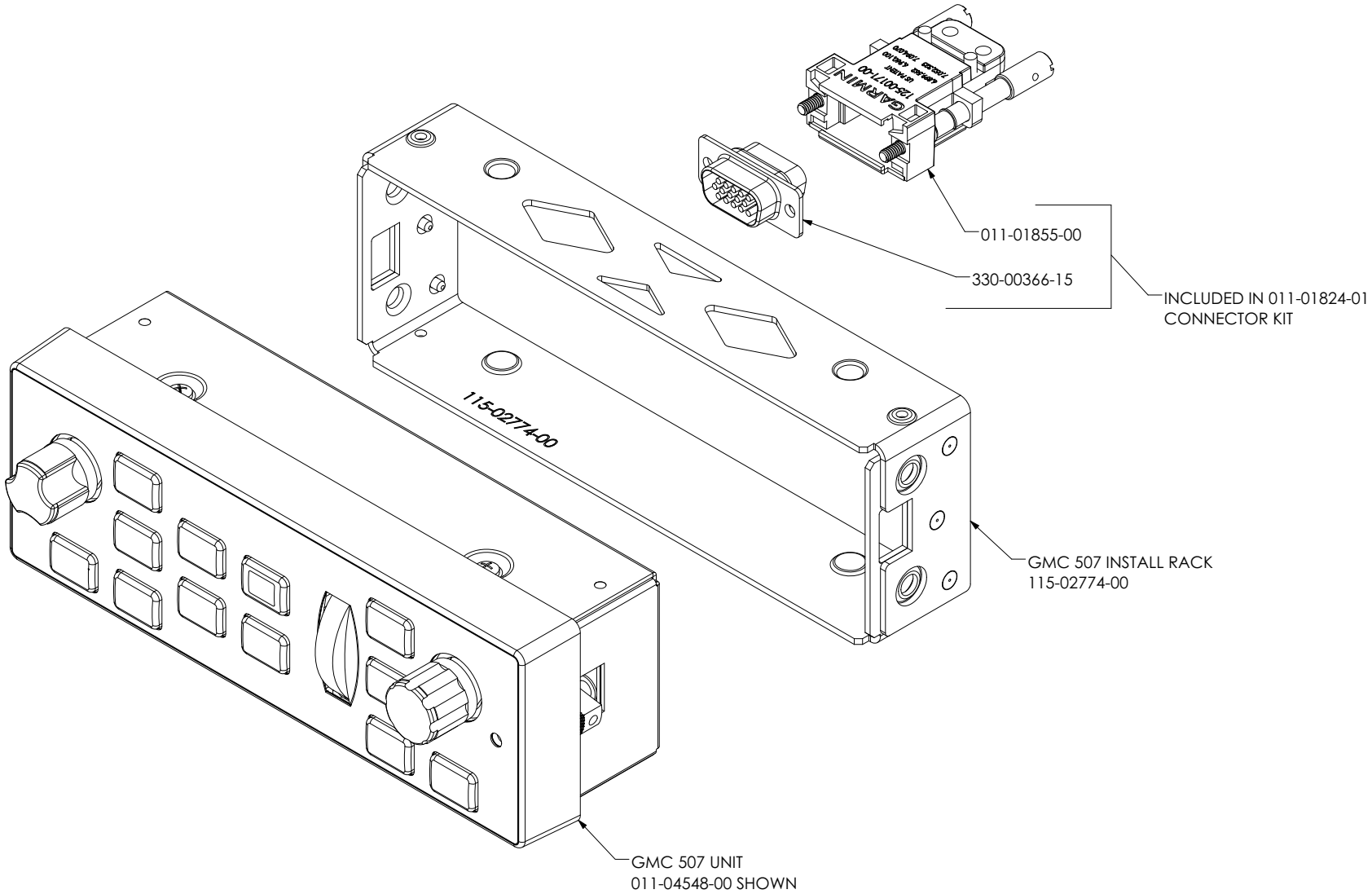

NOTES:

1. THE FASTENERS ARE ENGAGED AND DISENGAGED BY USE OF A 3/32" HEX TOOL.
2. TORQUE FASTENERS TO 20±2 IN-LBS ON INSTALLATION.
3. TO DISENGAGE THE UNIT, ROTATE FASTENERS CCW. DO NOT EXCEED 15 IN-LBS OF TORQUE.

Figure 4-60 GMC 507 Installation Drawing with Installation Rack

OPTION 1:
STACK CUTOUT (RACK INSTALLED FROM FRONT OF AIRCRAFT PANEL)

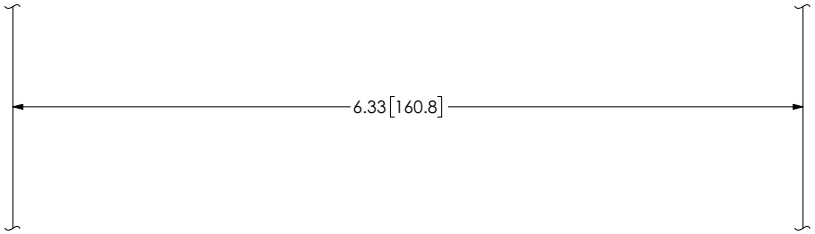

OPTION 2:
RADIO CUTOUT (RACK INSTALLED FROM FRONT OF AIRCRAFT PANEL)

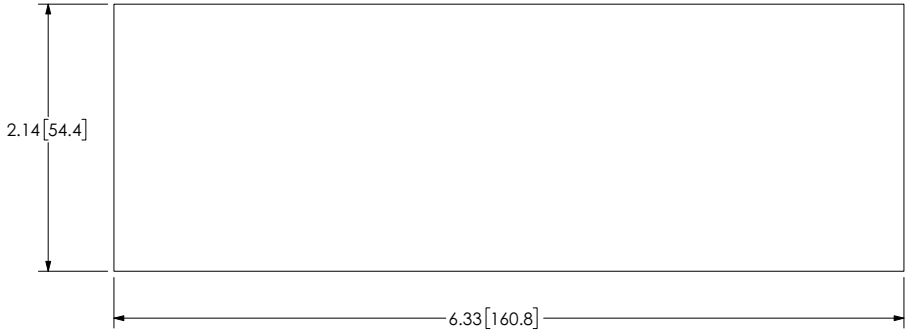

OPTION 3:
RADIO CUTOUT (RACK INSTALLED FROM BACK OF AIRCRAFT PANEL ONLY)

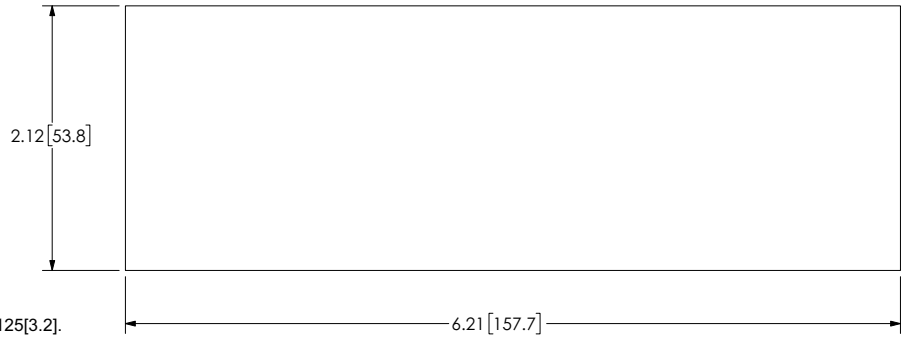

NOTES:
1. DIMENSIONS: INCHES [mm]
2. TOLERANCES:

INCHES	mm
.XX ± .02	XX ± 0.5
.XXX ± .010	.XX ± 0.25

3. MAXIMUM AIRCRAFT PANEL THICKNESS IS .125[3.2].

Figure 4-61 GMC 507 Panel Cutout Template for Installation with Installation Rack

4.4.10 GSA 28 Autopilot Servo Installation

This section contains general information as well as installation information for the GSA 28 Servo Actuator. Use this section to mount the GSA 28 unit.

Figure 4-62 GSA 28 Unit View

4.4.10.1 Equipment Description

CAUTION

The GSA 28 supports a single trim switch input only. For use with multiple trim switches (e.g., pilot and co-pilot), a GAD 27 or other third-party device capable of mixing multiple trim switches into one is required.

NOTE

There is no TSO/ETSO applicable to the GSA 28.

NOTE

The GSA 28 is intended to be installed in fixed-wing aircraft only.

NOTE

The GSA 28 engagement clutch is actuated by an internal solenoid. An audible clicking sound when the servo is engaged or disengaged is normal and expected.

Refer to section 1.2.12 for a full description of the GFC 500X autopilot.

4.4.10.2 GSA 28 Installed as a Trim Motor

In the uncommon case of using a GSA 28 as a dedicated trim actuator, the following must be considered:

NOTE

This section is specific to using a GSA 28 as a trim actuator, and does not apply to installations which use a DC motor as a trim motor.

- The GSA 28 cannot hold a fixed position when disengaged, as the shaft will turn freely. It can only be used in installations where the trim actuator does not need to hold a fixed position when powered off. An acceptable application is the GSA 28 driving a manual pitch trim system using capstan and bridle cables.
- When used as the trim servo, the GSA 28 communicates using the CAN bus (same as the other servos communicate), no RS-232 or other data connection is required. Depending on the installation location, the GSA 28 needs to be ID strapped appropriately for the pitch trim location.
- The GSA 28 should be connected to the CWS/DISCONNECT input. For manual electric trim, trim inputs from the stick or relay should be wired directly to the GSA 28 being used as the trim actuator, as well as the main autopilot servo for that axis.

4.4.10.3 CWS/DISCONNECT

NOTE

The CWS/DISCONNECT key must be mounted where it is easily accessible to the pilot during all phases of flight. The pilot must have ability to quickly disconnect the autopilot under all circumstances.

The CWS/DISCONNECT key is used to disengage the autopilot system. It can also optionally be used for autopilot engagement and control wheel steering. Refer to section 5. The CWS/DISCONNECT input to all servos should be tied together and connected to a normally open momentary push-button that connects to ground when pressed.

4.4.10.4 Equipment Available

Table 4-41 GSA 28 Part Numbers

Model	Assembly Part Number	Unit Only Part Number
GSA 28 servo actuator, unit only	010-01068-00	011-02927-00
	010-01068-20	011-02927-20

NOTE

The -00 and -20 GSA 28 actuator are fit/form/function equivalent.

Select the appropriate servo installation brackets and adapters as necessary. The generic kits listed in table 4-48 (P/N 011-02952-00, -01, and -02) are not specific to any airframe. The airframe specific kits (P/N 011-02952-10 through -16) are for use with the specified experimental aircraft. The contents of each kit as well as specific instructions for their use are detailed in the figures listed in section 4.4.10.11.

Table 4-42 GSA 28 Available Equipment

Item	Garmin P/N	Weight	Mounting Bracket Included	Reference Figures
GSA 28 connector kit	011-02950-00	0.12 lb (0.054 kg)		
GSA 28 connector kit, 90°	011-02950-01	0.13 lb (0.059 kg)		
GSA 28 stop bracket kit	011-02951-00	0.03 lb (0.014 kg)		
GSA 28 mounting kit, generic, push-pull	011-02952-00	0.26 lb (0.118 kg)	No	4-75
GSA 28 mounting kit, generic, w/bracket	011-02952-01	0.50 lb (0.227 kg)	Yes	4-76
GSA 28 mounting kit, generic, capstan	011-02952-02	0.14 lb (0.064 kg)	No	4-72
GSA 28 mounting kit, RV-6 roll	011-02952-10	0.55 lb (0.250 kg)	Yes	4-77
GSA 28 mounting kit, RV-4/8 pitch	011-02952-11	0.51 lb (0.231 kg)	Yes	4-78
GSA 28 mounting kit, RV-7/8/10 roll	011-02952-12	0.42 lb (0.191 kg)	Yes	4-79
GSA 28 mounting kit, RV-9 roll	011-02952-13	0.42 lb (0.191 kg)	Yes	4-80
GSA 28 mounting kit, RV-6/7/9 pitch	011-02952-14	0.37 lb (0.168 kg)	Yes	4-81
GSA 28 mounting kit, RV-10 pitch	011-02952-15	0.48 lb (0.218 kg)	Yes	4-82
GSA 28 mounting kit, RV-10 yaw	011-02952-16	0.60 lb (0.272 kg)	Yes	4-83
GSA 28 removal adapter	011-03158-00	0.03 lb (0.014 kg)		

Table 4-43 Contents of Connector Kit (P/N 011-02950-00)

Item	Garmin P/N	Quantity
Sub-assy, backshell w/hardware, jackscrew, 15/26-pin	011-01855-01	1
GSA 28 removal adapter	011-03158-00	1
Connector, receptacle, D-sub, crimp socket, commercial,15-socket	330-00625-15	1
Contact, socket, MIL crimp, size 20,20-24 AWG, RoHS	336-00022-02	16

Table 4-44 Contents of Connector Kit, 90° (P/N 011-02950-01)

Item	Garmin P/N	Quantity
Sub-assy, backshell w/hardware, jackscrew, 90°, 15/26-pin	011-01959-01	1
GSA 28 removal adapter	011-03158-00	1
Connector, receptacle, D-sub, crimp socket,commercial,15-socket	330-00625-15	1
Contact, socket, MIL crimp, size 20, 20-24 AWG, RoHS	336-00022-02	16

4.4.10.5 Unit Installation

Fabrication of a wiring harness is required. Sound mechanical and electrical methods and practices should be used for installation of the GSA 28. Refer to section 4.1 for wiring considerations, and to appendix A for pinouts.

Connector kits include backshell assemblies. Garmin's backshell connectors give the installer the ability to quickly and easily terminate shield grounds at the backshell housing. The instructions needed to install the jackscrew backshell are located in section 4.3.1.

For final installation and assembly, refer to figure 4-69 through figure 4-83 for outline and installation drawings.

WARNING

Unless otherwise specified, tighten all threaded fasteners in accordance with FAA advisory circular AC 43-13-1B section 7.40, including adjustment for friction drag torque.

WARNING

It is vital to make sure the autopilot servo and aircraft control linkage is free to move throughout its entire range of travel without binding or interference. Failure to provide adequate clearance between the moving parts of the control system linkage and nearby structure could result in serious injury or death. If any control system binding or interference is detected during installation or preflight inspection, it must be corrected before flight.

CAUTION

Do not mount the GSA 28 on the 'hot' side (engine side) of the firewall, or in any location where it would be exposed to radiated heat from the engine.

4.4.10.6 GSA 28 Mounting Kits

Garmin currently provides the mounting kits listed in table 4-42 for the GSA 28 Servo.

4.4.10.6.1 Generic Push/Pull Kits

WARNING

Thread engagement between the male rod end bearings supplied with GSA 28 mounting kits and push rod must not be less than 0.375". This minimum engagement length is recommended to prevent push rod from coming apart.

P/N 011-02952-00 and -01 kits are generic kits for push/pull applications. This kit is supplied with a 3/8" diameter x 8" long solid rod (figure 4-63). This rod is intended to be used as the attachment link between the GSA 28 and the flight control system. It is the installer's responsibility to cut this rod to the correct length and tap the ends for the male rod end bearings. It is recommended these push rods are tapped to a depth of at least 0.61" to accommodate the entire thread of the rod end bearing (minus the jam nut). The length of the push rod is adjustable by changing the thread engagement between the male rod end bearings and push rod. The acceptable range of thread engagement is 0.492" +/-0.117". It is highly recommended the AN315-3R jam nuts are used and properly tightened. A push rod without a tightened jam nut will create backlash that can diminish autopilot performance.

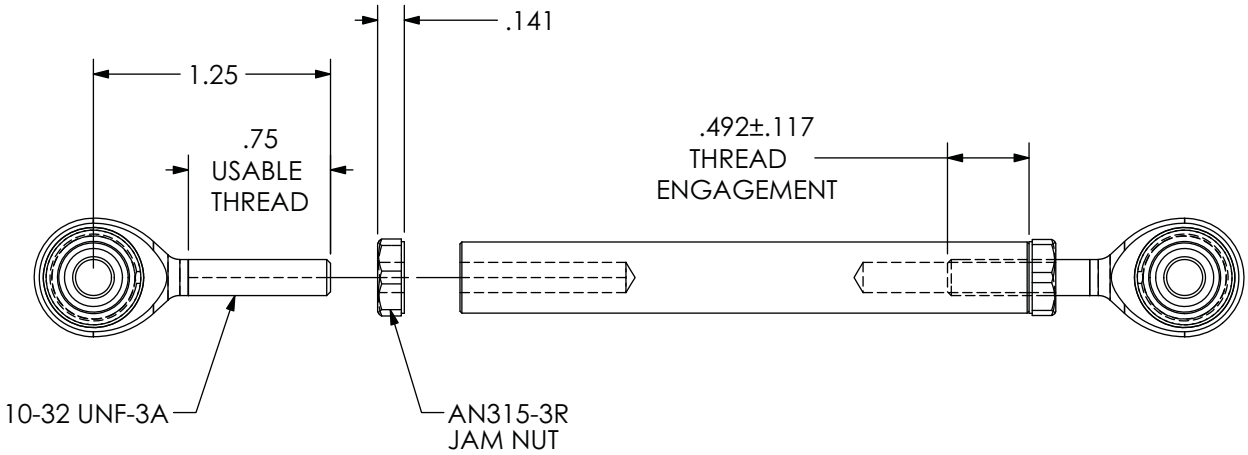

Figure 4-63 General Dimensions For Servo Push Rod And Rod End Bearings

4.4.10.6.2 Capstan Kit

WARNING

Failure to closely follow the capstan installation guidance in this section could cause the aircraft flight controls to jam, resulting in serious injury or death.

NOTE

When determining the length o f the bridle cable to be ordered, be sure to allow for enough cable to make the required number of wraps around the capstan. Refer to figure 4-65.

The capstan kit is P/N 011-02952-02. This kit contains a capstan, a cable guard, and fasteners used to attach these items.

The capstan is designed to accept a MS20663C2 double shank ball with a 1/16” diameter cable. This kit does not currently include a bridle cable or cable clamps necessary to link the capstan to the flight control cables as these items are generally specific to each aircraft type. The required bridle cable (figure 4-64) is a 1/16” cable with a MS20663C2 ball and double shank fitting swaged onto the cable where it engages with the capstan drive wheel. The MS20664C2 ball and shank fittings on the ends keep the cable from fraying.

Several companies sell custom made cable assemblies suitable for this application, a few of these are:

McFarlane Aviation	Aircraft Spruce
Phone: 866-920-2741	Customer Service: 1-800-861-3192
www.mcfarlane-aviation.com	www.aircraftspruce.com/catalog/appages/cableassy.php

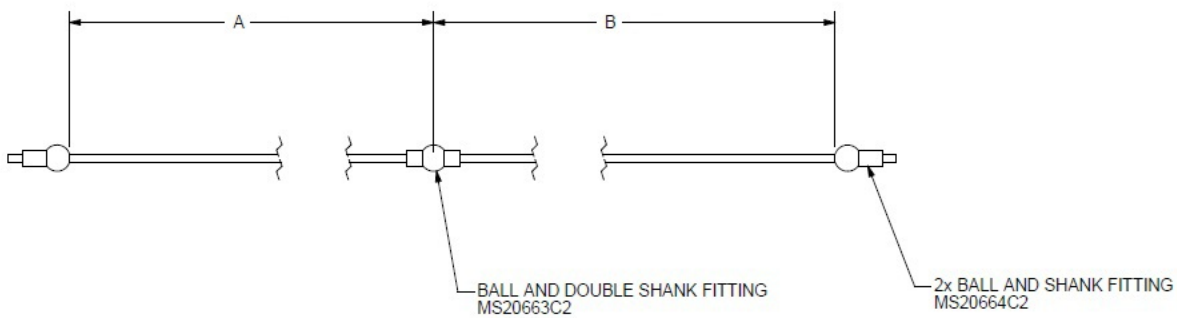

Figure 4-64 Bridle Cable

Garmin recommends using the cable arrangement (ball centered in capstan) shown in figure 4-65 to avoid side-loading the servo center shaft.

WARNING

The ball must be located in the center of travel on the capstan when the flight control is in the neutral position. When the flight control is moved to the limits of its travel, the ball must not have any possibility of exiting the capstan groove.

The bridle cable must wrap around the capstan either 1 or 1.5 full turns, as shown in figure 4-65, and must be routed in a way that avoids the possibility of binding. If the installation would require more than +/- 150° of capstan rotation or more than +/- 2.6 inches of cable travel, the GSA 28 servo and capstan cannot be used.

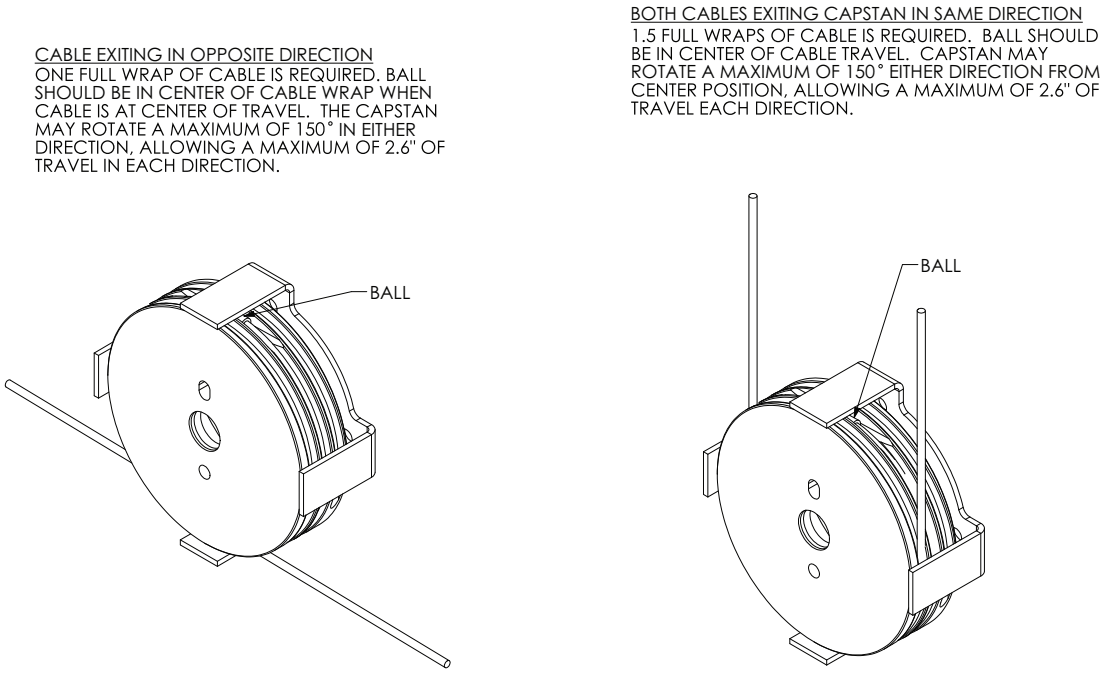

Figure 4-65 Cable in Capstan

The P/N 011-02952-02 capstan kit is provided with four #4-40 screws and lock washers for attaching the cable guard. The screws provided are 0.25” long. This length of screw is appropriate if there is no bracket or spacers in-between the cable guard and servo. If a mounting bracket or spacers of thickness .056” or greater will be place in-between the stop bracket and servo, longer screws should be used to attach the cable guard. It is recommended the thread engagement into the GSA 28, as measured from the front face of the servo shall be 0.112” – 0.25”. If screws other than what is provided will be used, be sure to use thread locking compound or a proper thread locking patch combined with the lock washers provided. Also be sure to follow the recommended tightening torque specified in figure 4-72.

4.4.10.6.3 Aircraft Specific Mounting Kits

CAUTION

If screws are being used to mount the cable guard to the front face of the GSA 28 are different than the screws provided with the stop bracket kit, care must be taken to make sure these screws are not long enough to contact moving parts inside the GSA 28. Maximum screw insertion, as measured from the front of the GSA 28, must be less than 0.25" to avoid contact with parts inside the GSA 28.

GSA 28 mounting kits are available for several experimental airframes. These mounting kits are listed in table 4-42. All of these kits contain sheet metal mounting brackets that have been designed for the specific application and some contain push rods that have been designed for the specific application. The push rods are supplied cut to the appropriate length and tapped for the male rod end bearings provided. Overall push rod length as well as rod end bearing thread engagement length is provided on the drawings for each kit. The lengths specified are considered nominal. This length should be adjusted to fit the specific application. Ideal push rod length results in the push rod being perpendicular to the servo arm when it is at the center of travel.

It is recommended the stop bracket is installed with all push/pull applications. The drawings for each of these mounting kits shows the recommended orientation of this bracket. It is acceptable to deviate from these drawings if a better orientation has been determined by the installer. The best orientation results in the stop bracket flanges being equal distance from the servo arm when at the center of travel. Refer to section 4.4.10.7.2 on stop bracket kit for more details.

4.4.10.6.4 GSA 28 Installation Into a Non-Garmin Bracket

WARNING

If using a non-Garmin mounting bracket, it is the installer's responsibility to make sure the bracket is structurally adequate for the application.

CAUTION

Damage may occur to the GSA 28 if the mounting bracket overlaps the bushing protrusion when tightening down the mounting bolts. The damage can occur when the bushing is displaced into the unit. To prevent damage, make sure there is clearance for the bushing protrusion and be sure the GSA 28 mounting plate is flush with the bracket when the mounting bolts are being tightened.

NOTE

Garmin cannot validate the structural integrity of non-Garmin brackets.

For installers who intend to fabricate their own brackets or use an existing bracket designed for a non-Garmin servo, consider the following:

The geometry of the GSA 28 varies from other popular servo models.

While the GSA 28 has the same 2.5" x 4.0" footprint, the same mounting hole locations, and uses the same mounting bolts as several other popular brands of autopilot servo, it does not fit into all mounting brackets designed for other servos. Some of the key differences to consider are:

- The GSA 28 servo has a larger bushing protrusion on the front plane of the servo.
- The harness connector is larger and in a different location relative to the output shaft.
- The GSA 28 does not contain tapped holes for mounting, instead it uses through holes and a thinner mounting flange.

Brackets fabricated for other manufacturer's servos may or may not have enough clearance for the large bushing protrusion. Modification to the bracket may be necessary to avoid interference with bushing protrusion. Refer to figure 4-66 for details.

For RV-7/8/9/10 roll installations, the rear support bracket used with other popular servos is not compatible with the GSA 28. This is because of the difference in thickness of the GSA 28 mounting flange relative the other servos.

Refer to figure 4-69 for GSA 28 outline dimensions. Refer to figure 4-73 for recommended bracket cutout dimensions.

Mounting brackets provided in the GSA 28 mounting kits have been designed to withstand repetitive stress cycles endured during loads generated by the GSA 28 and aircraft vibrations. If using a non-Garmin mounting bracket, it is the installer's responsibility to make sure the bracket is structurally adequate for the application. It is important to consider the detrimental effects of bracket displacement and potential for fatigue failures due to reaction forces created by the GSA 28 loading and aircraft vibration.

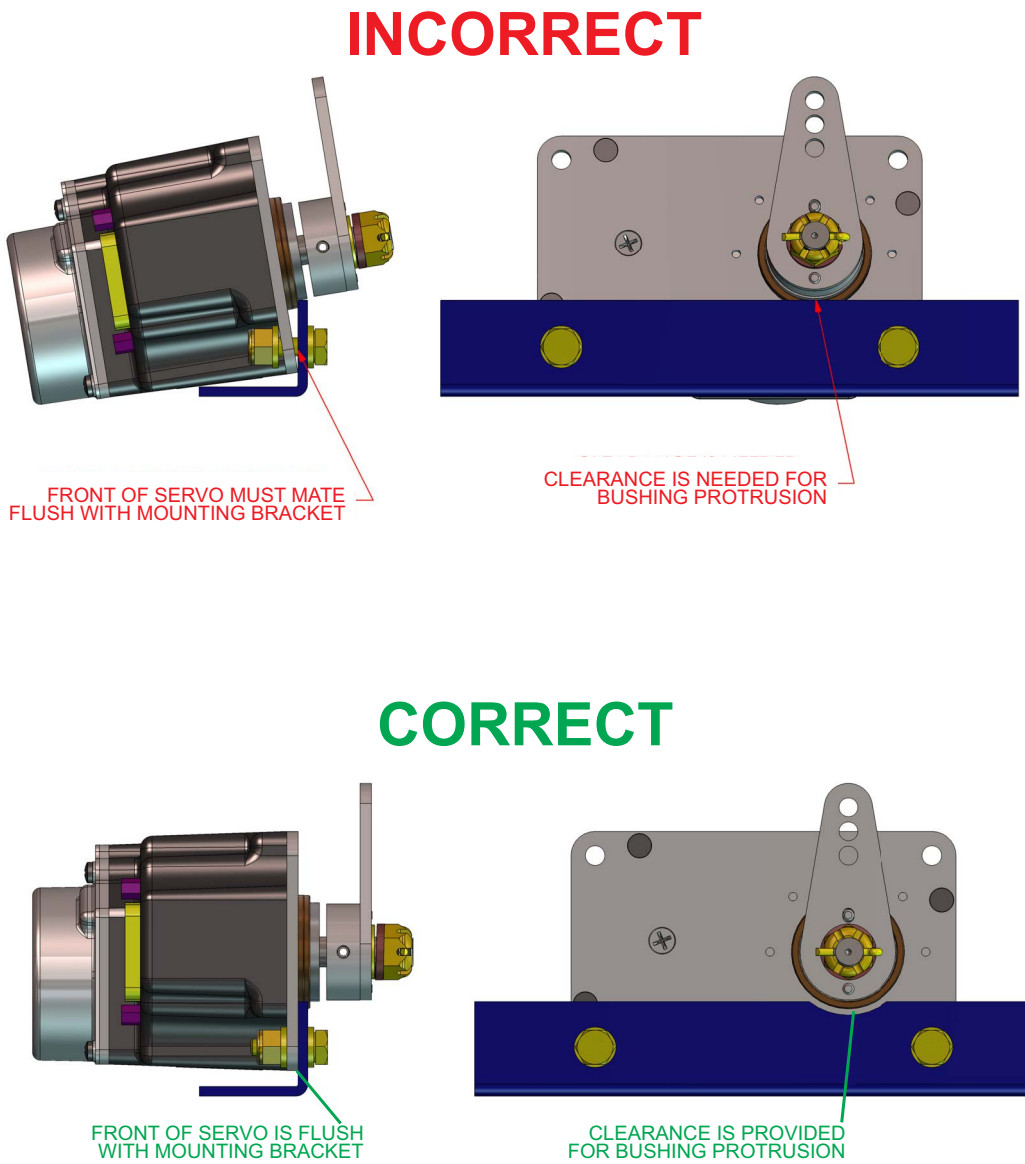

Figure 4-66 Non-Garmin GSA 28 Bracket

4.4.10.7 Optional Attachments

The following attachments or adapters are available to supplement installation, as necessary.

4.4.10.7.1 Long Crank Arm

WARNING

Cotter pins supplied with GSA 28 are only intended for one time use. If removed from GSA 28 discard and use new cotter pin.

WARNING

Do not use crank arm attachments to actuate cable driven controls. A capstan attachment should be used for this purpose.

The GSA 28 is supplied from the factory with a standard crank arm attachment (figure 4-67, figure 4-69, figure 4-70, and figure 4-71). Also available are a long crank arm supplied in the P/N 011-02952-10 RV-6 roll kit and a capstan attachment available in the P/N 011-02952-02 capstan kit. If one of these optional attachments will be used, it is up to the installer to remove the standard crank arm and replace it with the optional attachment. When removing the standard arm, keep the castle nut, lock washer, and flat washer as these items will need to be re-used with the optional attachment. Discard cotter pin that was removed from the GSA 28 and replace with pin provided with optional attachment. Refer to figure 4-71 and figure 4-72 for more details and instructions for tightening the castle nut.

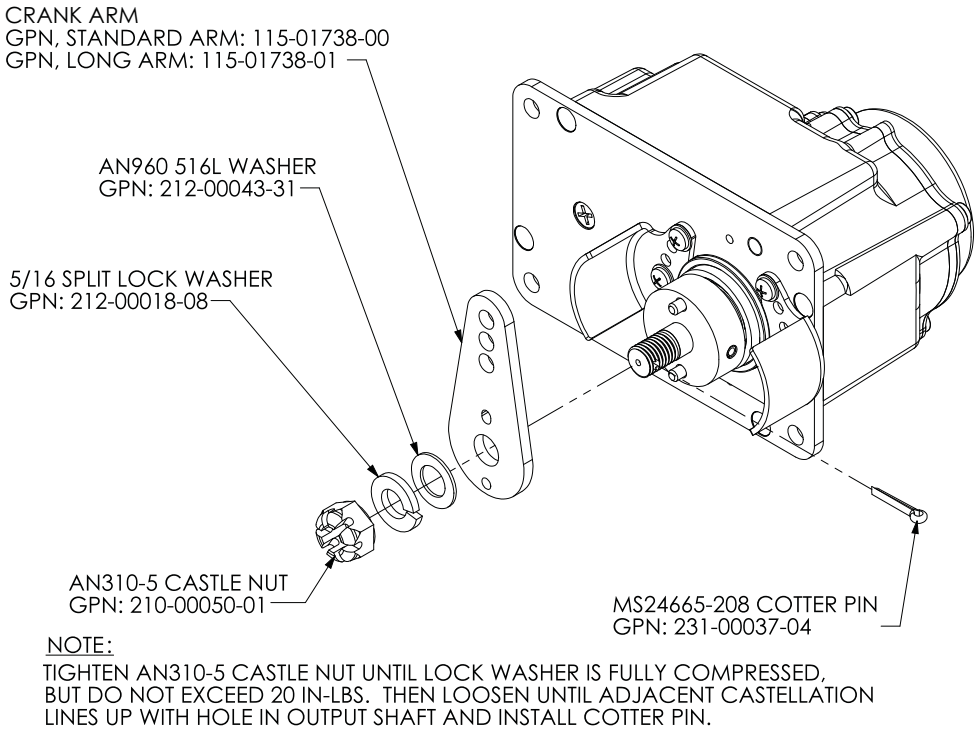

Figure 4-67 Crank Arm Assembly

4.4.10.7.2 Stop Bracket Kit

WARNING

An over-center position of the servo control arm relative to the attached push rod can cause the flight controls to jam. This could result in serious injury or death. Please be sure this is well understood before flying with the GSA 28 servo.

WARNING

After installation of the servo is complete, verify the stop bracket does NOT impede the full movement of the associated control.

CAUTION

If screws are being used to mount the stop bracket to the front face of the GSA 28 are different than the screws provided with the stop bracket kit, care must be taken to make sure these screws are not long enough to contact moving parts inside the GSA 28. Maximum screw insertion, as measured from the front of the GSA 28, must be less than 0.25" to avoid contact with parts inside the GSA 28.

CAUTION

To avoid the possibility of contaminating the internal rotating mechanisms of the GSA 28, do not apply thread locking compound directly to the stop bracket attachment holes in the front face of the servo. Instead, apply a small amount of thread locking compound to the threads of the stop bracket screws before the screws are inserted. Thread locking compound is not required upon initial installation of the included stop bracket screws, which are supplied with thread locking compound already applied.

Every GSA 28 is supplied with a P/N 011-02951-00 stop bracket kit. The intention of this stop bracket is to create redundant stops for the servo control arm that prevents the servo's arm from going over-center relative to the push rod connected to the servo's arm. It is highly recommended this part gets installed with every push-pull application. The stops created by installing this bracket are redundant in the sense the aircraft's built-in stops should always be used as the primary means of limiting travel of the servo's control arm. This stop bracket limits the motion of the standard control arm to 100° total travel. This bracket should be positioned so the stop bracket flanges are as close as practical to being equal distance from the servo's control arm while at the center of travel. Also, to prevent an over-center condition, the servo's push rod should be as close as practical to perpendicular with the servo's control arm while positioned at the center of travel. The position of this bracket can be adjusted in increments of 15°. If necessary, further adjustments can be made by changing the length of the push rod connected to the servo.
Refer to figure 4-70, and figure 4-71 for more details.

The stop bracket kit is supplied with four #4-40 screws used to attach the bracket to the front face of the servo. The screws provided are 0.25" long. This length of screw is appropriate if there is no bracket or spacers in-between the stop bracket and servo. If a mounting bracket or spacers of thickness .040" or greater will be place in-between the stop bracket and servo, longer screws should be used to mount the stop bracket. It is recommended the thread engagement into the GSA 28, as measured from the front face of the servo shall be 0.112" – 0.25". If screws other than what is provided will be used, be sure to use thread locking compound or a proper thread locking patch combined with the lock washers provided. Also be sure to follow the recommended tightening torque specified in figure 4-70.

4.4.10.7.3 GSA 28 Removal Adapter

The GSA 28 connector kit is shipped with a removal adapter (011-03158-00). This part is not intended to be installed with the GSA 28, but is used to replace the GSA 28 when the harness connector is unplugged. The removal adapter contains an internal 120 Ω resistor between pins 2 and 3 for CAN termination. It also contains shorts between pins 11 and 13 and 12 and 14 to pass through power for trim motors. The intention of this component is to allow operation of the CAN bus and trim motors when the servos are not plugged into the harness. It is recommended that a removal adapter is kept with each servo installation, in case the GSA 28 needs to be removed without losing functionality of the CAN bus and trim motors.

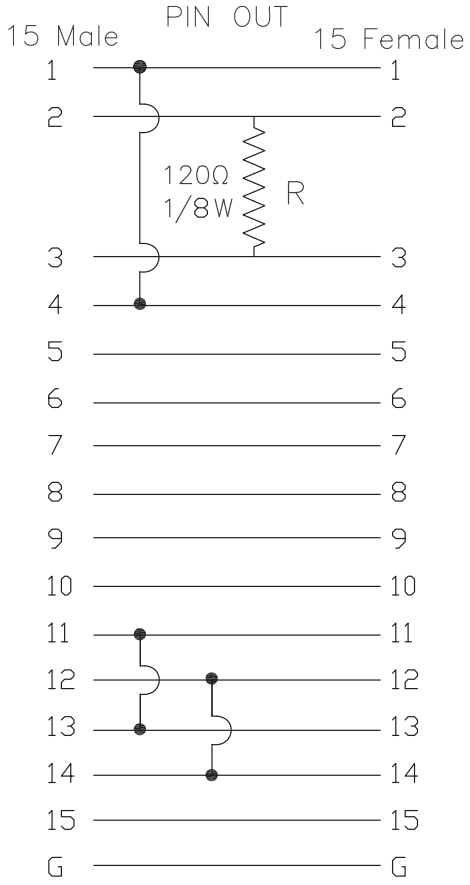

Figure 4-68 Wiring Diagram For GSA 28 Removal Adapter

4.4.10.8 General Specifications

Table 4-45 GSA 28 General Specifications

Characteristic	Specification
Height	4.0 inches (10.16 cm)
Width	2.5 inches (6.35 cm)
Depth	2.8 inches (7.11 cm) [1]
Weight	1.40** lbs, (0.635 kg) [2]

[1] Harness connector not included.
[2] Accessories not included.

4.4.10.9 Power Specifications

NOTE

The GSA 28 trim outputs are capable of sourcing a maximum of 1A of current to drive a DC trim motor at 12V, or a maximum of 550 mA of current to drive a DC trim motor at 24V. If more than 1A of current is required for a given trim booster device, a 3rd party device can be used in line with the trim motor and GSA 28. Refer to appendix B for more information.

CAUTION

The DC trim motor connected to the GSA 28 should be rated for the full power supply voltage being used to power the GSA 28. If the GSA 28 is connected by a 24-28V power input, the trim motor must also be rated for 28V.

NOTE

The GSA 28 does not provide a voltage step-up service. To drive a 24V trim motor, the GSA 28 must be supplied with 24V or higher.

Table 4-46 GSA 28 Power Specifications

Supply Voltage	Current Draw
14 VDC without auto-trim	0.36 amp (typical), 1.80 amp (max)
28 VDC without auto-trim	0.20 amp (typical), 1.00 amp (max)
14 VDC with auto-trim	0.36 amp (typical), 2.80 amp (max)

4.4.10.10 Torque Specifications

Table 4-47 GSA 28 Torque Specifications

Characteristic	Specification
Maximum rated torque	60 in-lbs

4.4.10.11 Outline and Installation Drawings

Refer to the following figures for GSA 28 installation guidance.

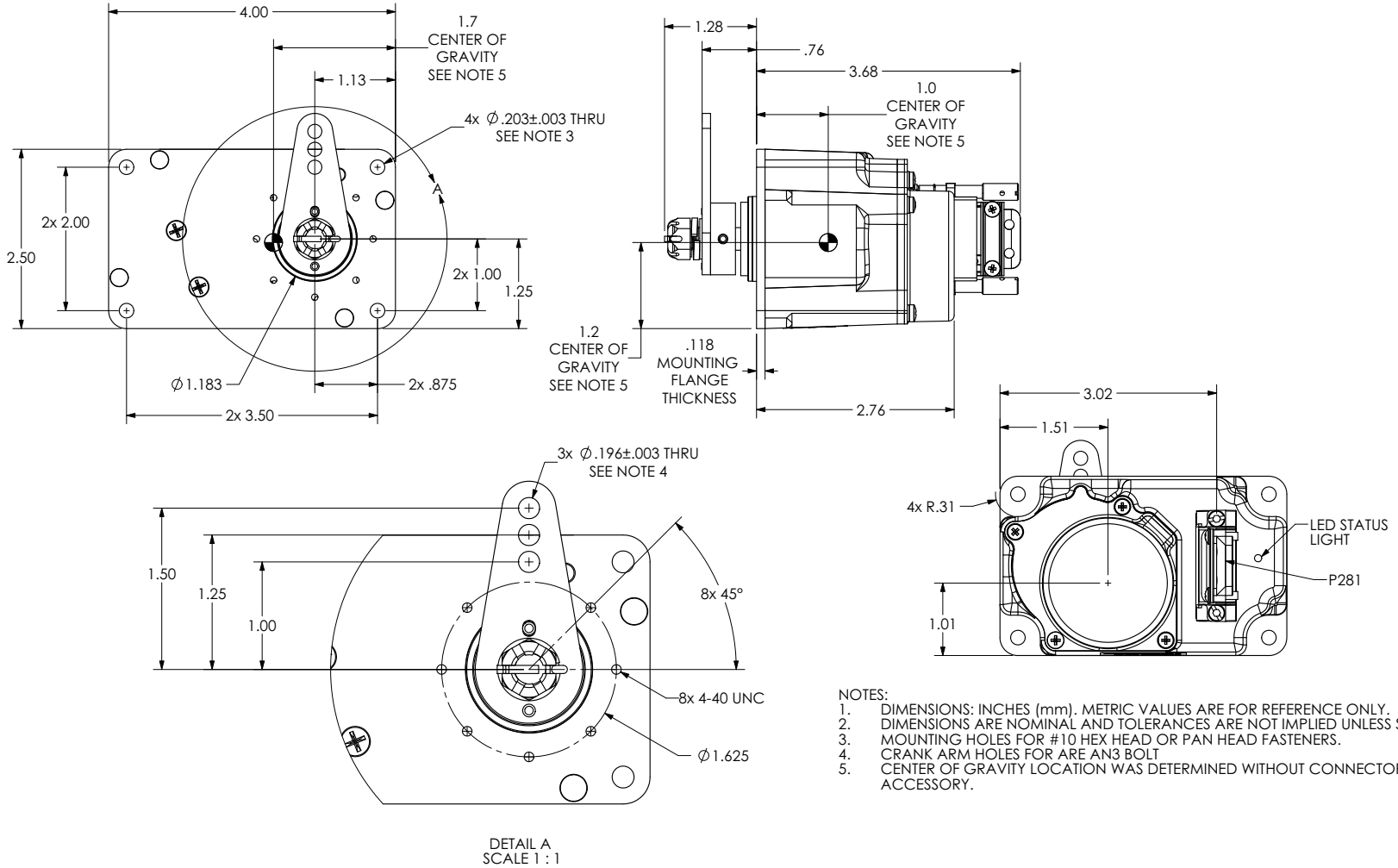

NOTES:
1. DIMENSIONS: INCHES (mm). METRIC VALUES ARE FOR REFERENCE ONLY.
2. DIMENSIONS ARE NOMINAL AND TOLERANCES ARE NOT IMPLIED UNLESS SPECIFICALLY STATED.
3. MOUNTING HOLES FOR #10 HEX HEAD OR PAN HEAD FASTENERS.
4. CRANK ARM HOLES FOR ARE AN3 BOLT
5. CENTER OF GRAVITY LOCATION WAS DETERMINED WITHOUT CONNECTOR KIT OR ANY OTHER ACCESSORY.

Figure 4-69 GSA 28 Outline/Installation Drawing (P/N 011-02927-20)

GSA28 STANDARD ACCESSORIES

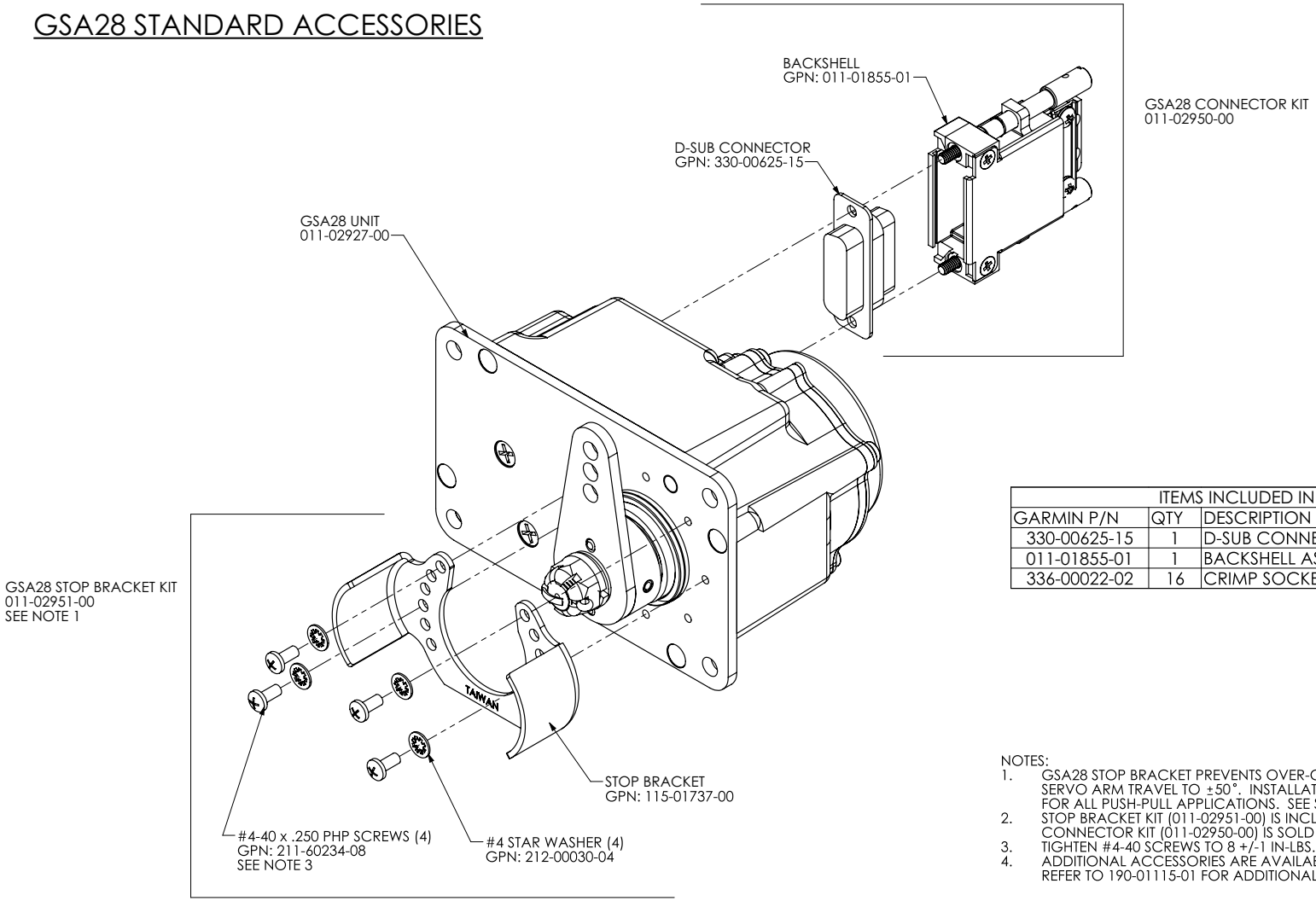

ITEMS INCLUDED IN 011-02950-00		
GARMIN P/N	QTY	DESCRIPTION
330-00625-15	1	D-SUB CONNECTOR, 15 PIN, CRIMP SOCKET
011-01855-01	1	BACKSHELL ASSEMBLY, W/JACKSCREWS
336-00022-02	16	CRIMP SOCKETS, M39029/63-368

NOTES:
1. GSA28 STOP BRACKET PREVENTS OVER-CENTER CONDITION BY LIMITING SERVO ARM TRAVEL TO ±50°. INSTALLATION OF THIS PART IS RECOMMENDED FOR ALL PUSH-PULL APPLICATIONS. SEE SHEET 3 FOR MORE DETAILS.
2. STOP BRACKET KIT (011-02951-00) IS INCLUDED AS STANDARD WITH UNIT. CONNECTOR KIT (011-02950-00) IS SOLD SEPARATELY FROM UNIT.
3. TIGHTEN #4-40 SCREWS TO 8 +/-1 IN-LBS.
4. ADDITIONAL ACCESSORIES ARE AVAILABLE BUT NOT SHOWN ON THIS DRAWING. REFER TO 190-01115-01 FOR ADDITIONAL PARTS LISTS.

Figure 4-70 GSA 28 Accessory Installation Drawing

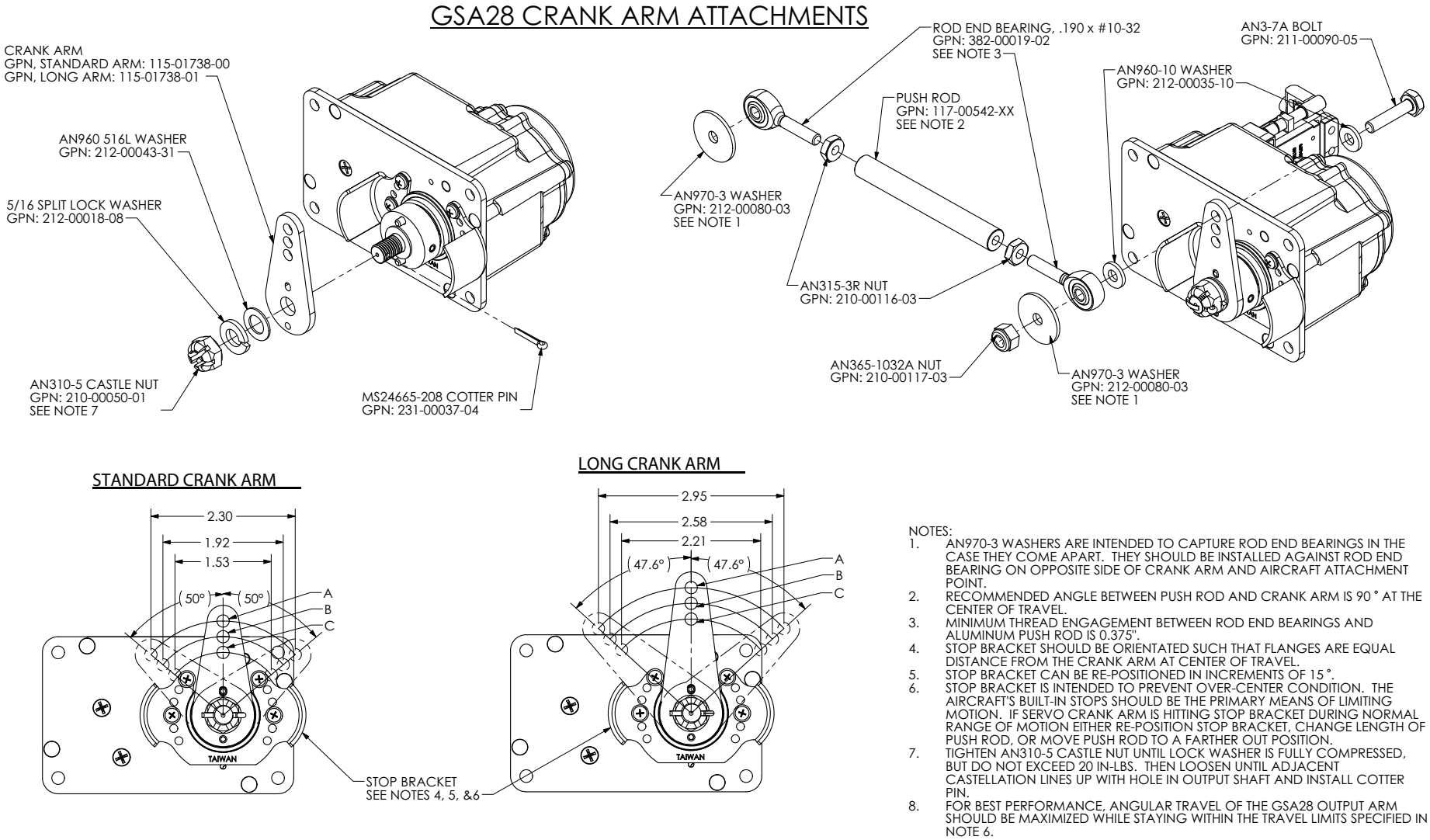

NOTES:

1. AN970-3 WASHERS ARE INTENDED TO CAPTURE ROD END BEARINGS IN THE CASE THEY COME APART. THEY SHOULD BE INSTALLED AGAINST ROD END BEARING ON OPPOSITE SIDE OF CRANK ARM AND AIRCRAFT ATTACHMENT POINT.
2. RECOMMENDED ANGLE BETWEEN PUSH ROD AND CRANK ARM IS 90° AT THE CENTER OF TRAVEL.
3. MINIMUM THREAD ENGAGEMENT BETWEEN ROD END BEARINGS AND ALUMINUM PUSH ROD IS 0.375".
4. STOP BRACKET SHOULD BE ORIENTATED SUCH THAT FLANGES ARE EQUAL DISTANCE FROM THE CRANK ARM AT CENTER OF TRAVEL.
5. STOP BRACKET CAN BE RE-POSITIONED IN INCREMENTS OF 15°.
6. STOP BRACKET IS INTENDED TO PREVENT OVER-CENTER CONDITION. THE AIRCRAFT'S BUILT-IN STOPS SHOULD BE THE PRIMARY MEANS OF LIMITING MOTION. IF SERVO CRANK ARM IS HITTING STOP BRACKET DURING NORMAL RANGE OF MOTION EITHER RE-POSITION STOP BRACKET, CHANGE LENGTH OF PUSH ROD, OR MOVE PUSH ROD TO A FARTHER OUT POSITION.
7. TIGHTEN AN310-5 CASTLE NUT UNTIL LOCK WASHER IS FULLY COMPRESSED, BUT DO NOT EXCEED 20 IN-LBS. THEN LOOSEN UNTIL ADJACENT CASTELLATION LINES UP WITH HOLE IN OUTPUT SHAFT AND INSTALL COTTER PIN.
8. FOR BEST PERFORMANCE, ANGULAR TRAVEL OF THE GSA28 OUTPUT ARM SHOULD BE MAXIMIZED WHILE STAYING WITHIN THE TRAVEL LIMITS SPECIFIED IN NOTE 6.

Figure 4-71 GSA 28 Crank Arm Attachments Drawing

GSA 28 WITH CAPSTAN KIT 011-02952-02

CABLE EXITING IN OPPOSITE DIRECTION
ONE FULL WRAP OF CABLE IS REQUIRED. BALL SHOULD BE IN CENTER OF CABLE WRAP WHEN CABLE IS AT CENTER OF TRAVEL. THE CAPSTAN MAY ROTATE A MAXIMUM OF 150° IN EITHER DIRECTION, ALLOWING A MAXIMUM OF 2.6" OF TRAVEL IN EACH DIRECTION.

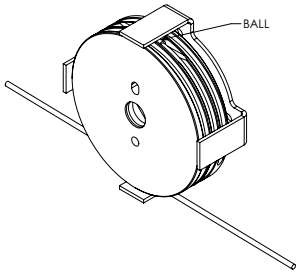

BOTH CABLES EXITING CAPSTAN IN SAME DIRECTION
1.5 FULL WRAPS OF CABLE IS REQUIRED. BALL SHOULD BE IN CENTER OF CABLE TRAVEL. CAPSTAN MAY ROTATE A MAXIMUM OF 150° EITHER DIRECTION FROM CENTER POSITION, ALLOWING A MAXIMUM OF 2.6" OF TRAVEL EACH DIRECTION.

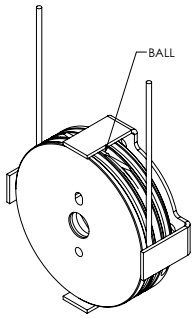

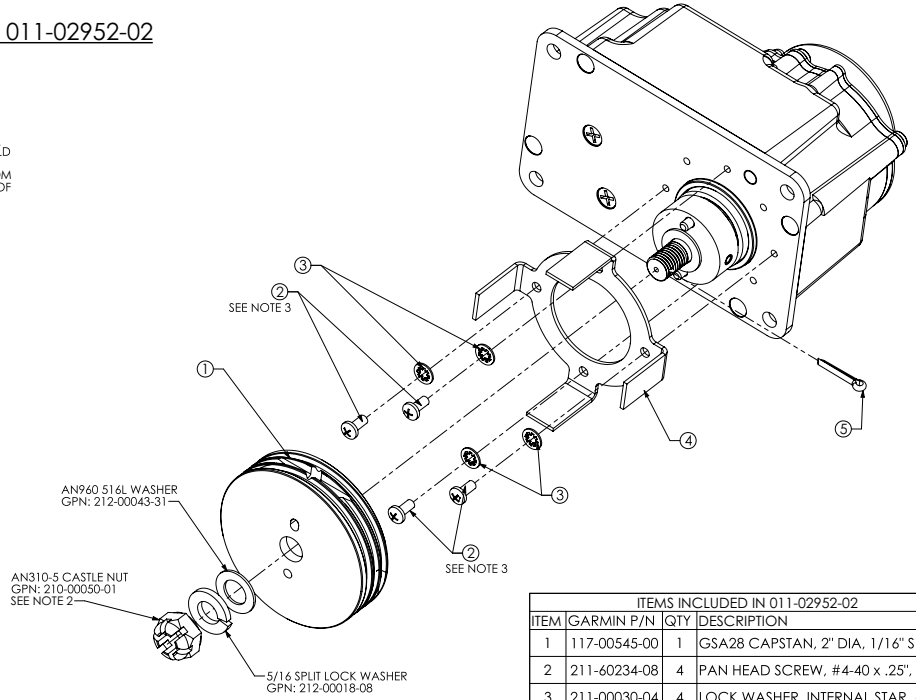

ITEMS INCLUDED IN 011-02952-02			
ITEM	GARMIN P/N	QTY	DESCRIPTION
1	117-00545-00	1	GSA28 CAPSTAN, 2" DIA, 1/16" SPIRAL
2	211-60234-08	4	PAN HEAD SCREW, #4-40 x .25", W/NYL
3	211-00030-04	4	LOCK WASHER, INTERNAL STAR, #4
4	115-01737-10	1	GSA28 CABLE GUARD
5	231-00037-04	1	COTTER PIN, MS24665-208

CASTLE NUT, 5/16" LOCK WASHER, AND AN960 516L WASHER ARE NOT INCLUDED IN CAPSTAN KIT. THESE ITEMS ARE PROVIDED WITH GSA28 UNIT.

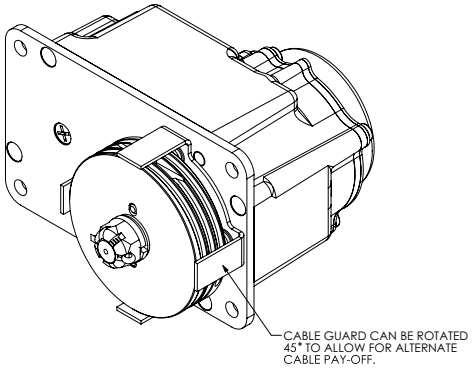

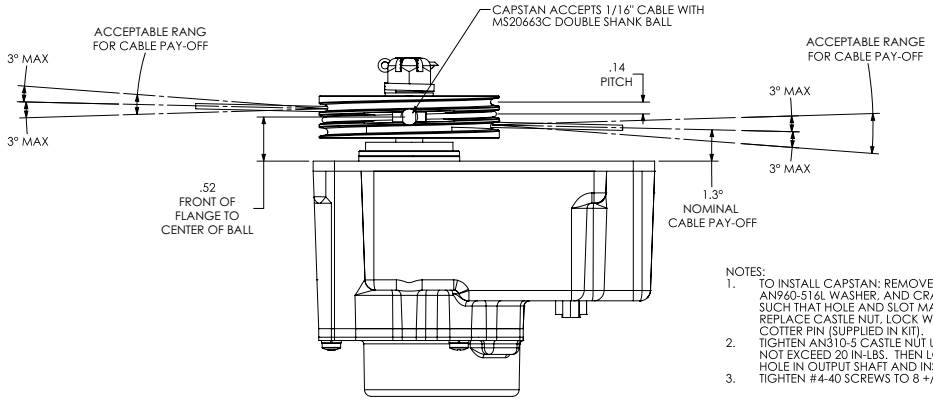

NOTES:
1. TO INSTALL CAPSTAN: REMOVE COTTER PIN, CASTLE NUT, 5/16" LOCK WASHER, AN960-516L WASHER, AND CRANK ARM SUPPLIED WITH GSA28. INSTALL CAPSTAN SUCH THAT HOLE AND SLOT MATES WITH ALIGNMENT PINS ON GSA28 OUTPUT HUB. REPLACE CASTLE NUT, LOCK WASHER, AND AN960-516L WASHER. INSTALL NEW COTTER PIN (SUPPLIED IN KIT).
2. TIGHTEN AN310-5 CASTLE NUT UNTIL LOCK WASHER IS FULLY COMPRESSED, BUT DO NOT EXCEED 20 IN-LBS. THEN LOOSEN UNTIL ADJACENT CASTELLATION LINES UP WITH HOLE IN OUTPUT SHAFT AND INSTALL COTTER PIN.
3. TIGHTEN #4-40 SCREWS TO 8 +/-1 IN-LB.

Figure 4-72 GSA 28 with Capstan Kit and Cable Instructions (P/N 011-02952-02)

RECOMMENDED BRACKET CUTOUT DIMENSIONS

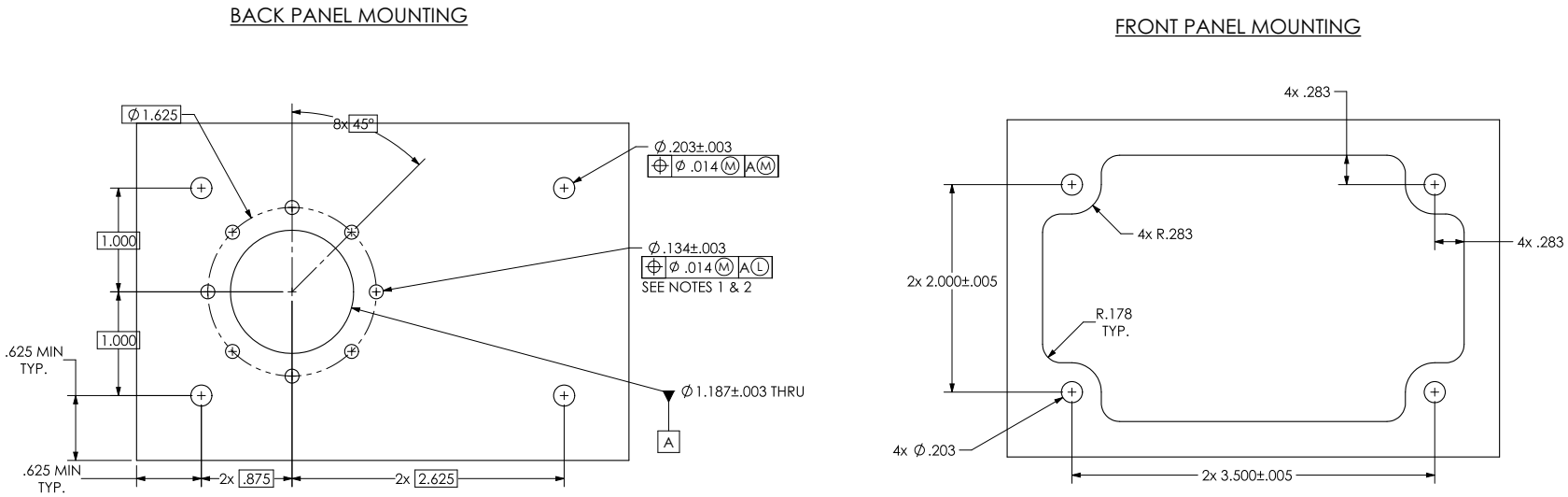

NOTES:
1. CLEARANCE HOLES ARE FOR #4 SCREWS USED TO ATTACH STOP BRACKET OR CABLE GUARD.
2. IT IS RECOMMENDED HOLES NOT BE CREATED UNLESS THEY WILL BE POPULATED WITH FASTENER.

Figure 4-73 GSA 28 Recommended Bracket Cutout Dimensions

RECOMMENDED GSA 28 MOUNTING HARDWARE

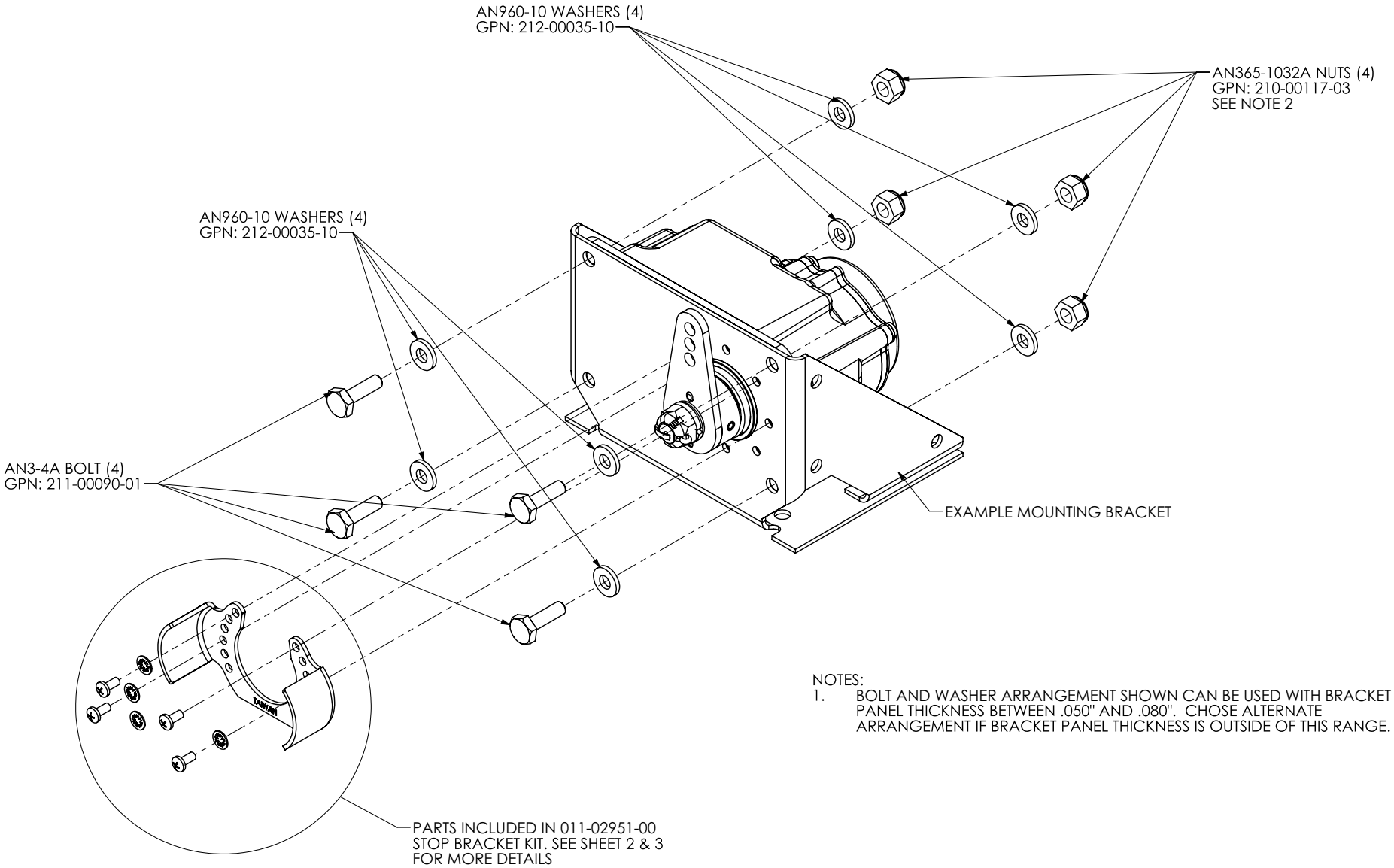

NOTES:
1. BOLT AND WASHER ARRANGEMENT SHOWN CAN BE USED WITH BRACKET PANEL THICKNESS BETWEEN .050" AND .080". CHOSE ALTERNATE ARRANGEMENT IF BRACKET PANEL THICKNESS IS OUTSIDE OF THIS RANGE.

Figure 4-74 GSA 28 Recommended Mounting Hardware

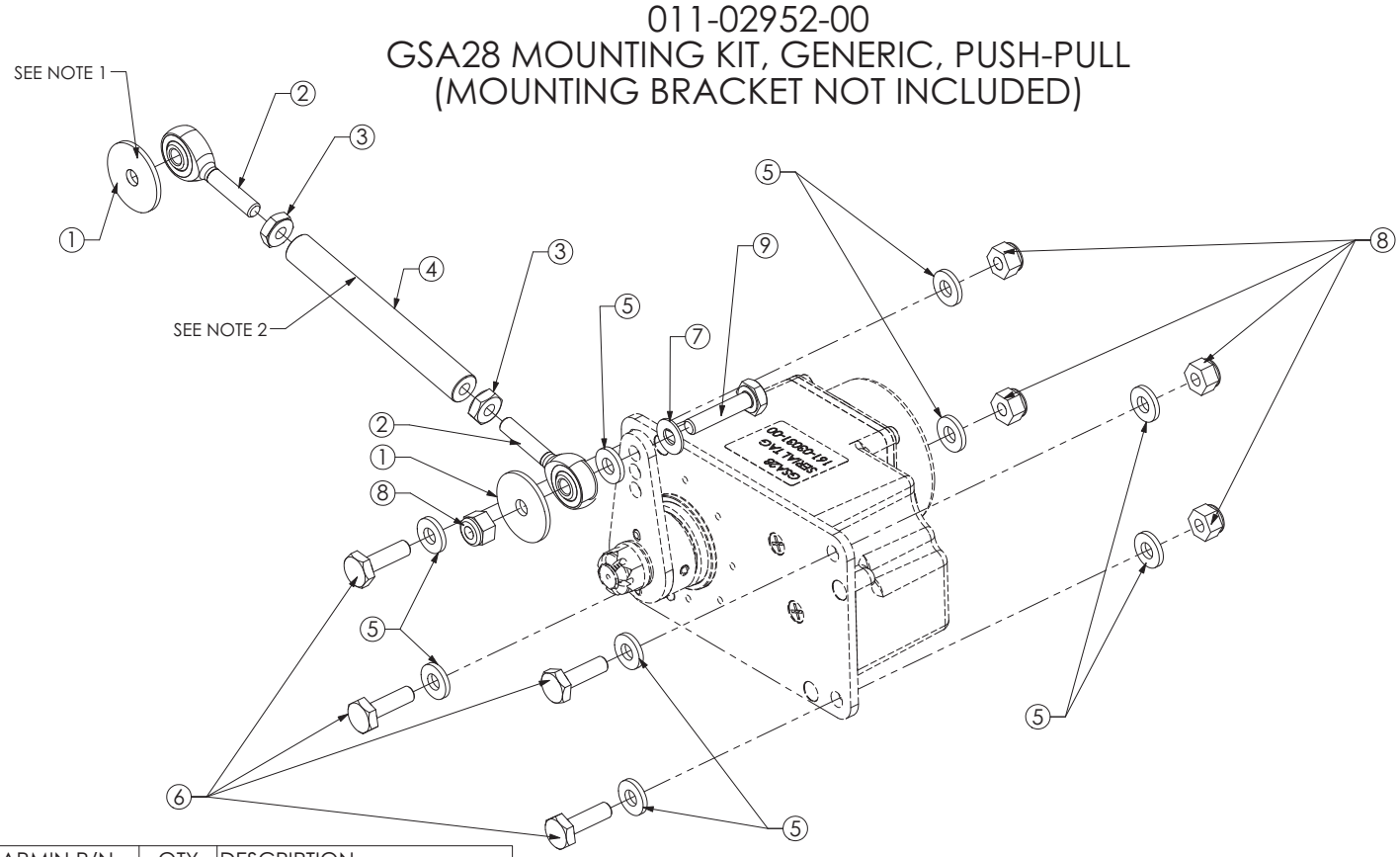

ITEM	GARMIN P/N	QTY	DESCRIPTION
1	212-00080-03	2	AN970-3 WASHER
2	382-00019-02	2	MALE ROD END BEARING
3	210-00116-03	2	AN315-3R JAM JUT
4	117-00542-07	1	PUSH ROD, 8.0" UNTAPPED
5	212-00035-10	9	AN960-10 WASHER
6	211-00090-01	4	AN3-5A BOLT
7	212-00043-10	1	AN960-10L (THIN) WASHER
8	210-00117-03	5	AN365-1032A LOCK NUT
9	211-00090-05	1	AN3-7A BOLT
10	231-00034-04	1	COTTER PIN, MS24665-208

NOTES:
1. PUSH ROD (ITEM 4) IS SUPPLIED 8" LONG AND UNTAPPED. CUT TO DESIRED LENGTH AND TAP #10-32 THREADS X .61" MIN DEEP IN EACH END. ALLOW ENOUGH LENGTH FOR THREAD ENGAMENT BETWEEN PUSH ROD (ITEM 4) AND ROD END (ITEM 2). ACCEPTABLE THREAD ENGAGMENT BETWEEN ITEM 2 AND 4 IS 0.492" ±.117".
2. IF COTTER PIN IS REMOVE FROM GSA28 CASTLE NUT, DISCARD COTTER PIN AND REPLACE WITH NEW COTTER PIN (ITEM 10) INCLUDED.

Figure 4-75 GSA 28 Generic, Push-Pull Mounting Kit (No Bracket) (P/N 011-02952-00)

011-02952-01
GSA28 MOUNTING KIT, GENERIC, PUSH-PULL, W/BRACKET

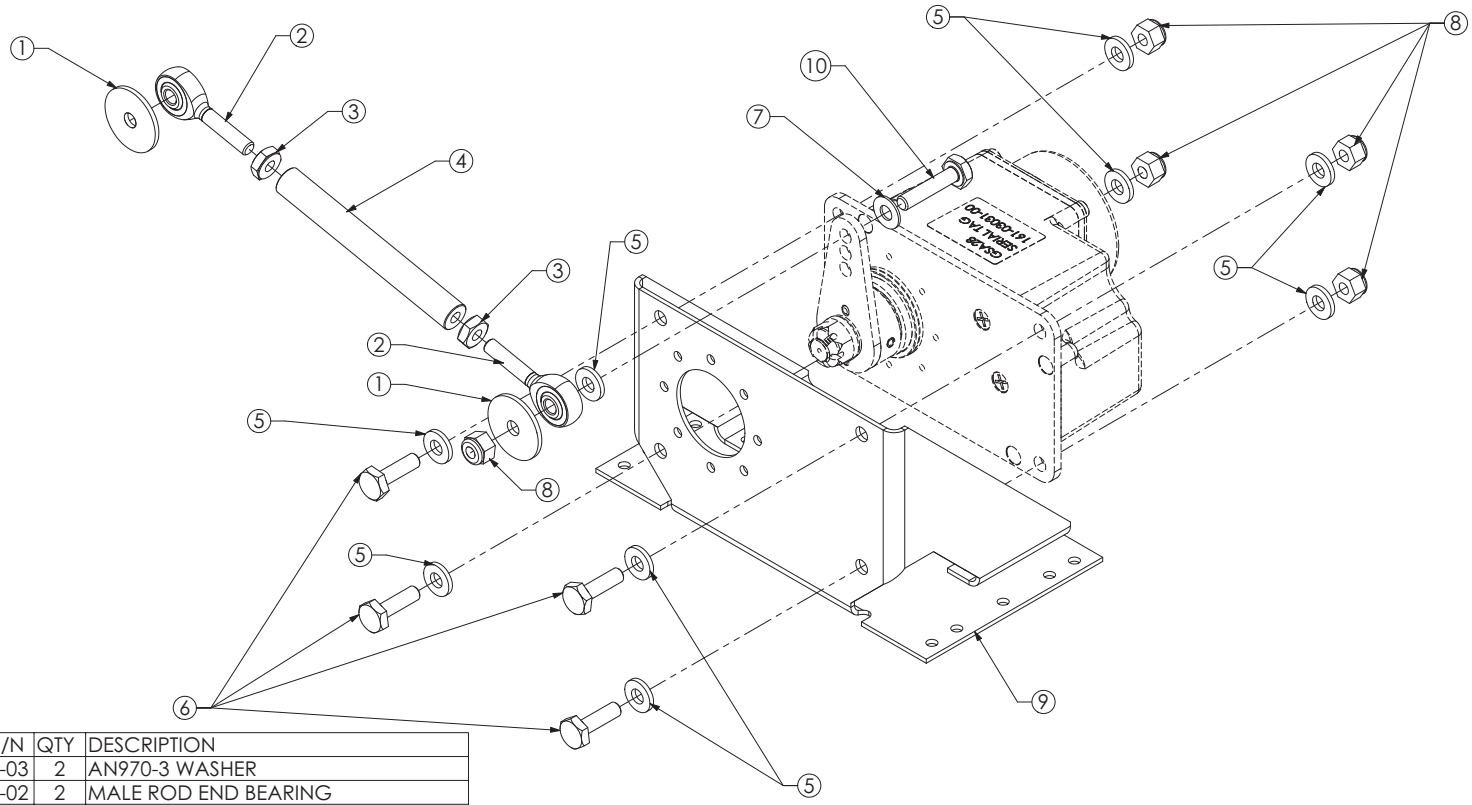

ITEM	GARMIN P/N	QTY	DESCRIPTION
1	212-00080-03	2	AN970-3 WASHER
2	382-00019-02	2	MALE ROD END BEARING
3	210-00116-03	2	AN315-3R JAM JUT
4	117-00542-07	1	PUSH ROD, 8.0" UNTAPPED
5	212-00035-10	9	AN960-10 WASHER
6	211-00090-01	4	AN3-5A BOLT
7	212-00043-10	1	AN960-10L (THIN) WASHER
8	210-00117-03	5	AN365-1032A LOCK NUT
9	115-01854-00	1	GSA28 MOUNTING BRAKCET, GENERIC
10	211-00090-05	1	AN3-7A BOLT
11	231-00034-04	1	COTTER PIN, MS24665-208

NOTES:
1. PUSH ROD (ITEM 4) IS SUPPLIED 8" LONG AND UNTAPPED. CUT TO DESIRED LENGTH AND TAP #10-32 THREADS X .61" MIN DEEP IN EACH END. ALLOW ENOUGH LENGTH FOR THREAD ENGAMENT BETWEEN PUSH ROD (ITEM 4) AND ROD END (ITEM 2). ACCEPTABLE THREAD ENGAGMENT BETWEEN ITEM 2 AND 4 IS 0.492" ±.117".
2. IF COTTER PIN IS REMOVE FROM GSA28 CASTLE NUT, DISCARD COTTER PIN AND REPLACE WITH NEW COTTER PIN (ITEM 11) INCLUDED.

Figure 4-76 GSA 28 Generic, Push-Pull Mounting Kit w/Bracket (P/N 011-02952-01)

ITEM	GARMIN P/N	QTY	DESCRIPTION
1	231-00037-04	1	COTTER PIN, MS24665-208
2	115-01738-01	1	GSA28 CRANK ARM, LONG
3	211-00090-05	1	AN3-7A BOLT
4	211-00090-16	1	AN3-21A BOLT
5	212-00080-03	2	AN970-3 WASHER
6	212-00035-10	10	AN960-10 WASHER
7	211-00090-01	4	AN3-5A BOLT
8	115-01854-01	1	RV-6 ROLL BRACKET
9	213-00093-02	1	SPACER, .192" x .375" x .600" LNG
10	115-01854-02	1	RV-6 ROLL SUPPORT PLATE
11	211-A0102-02	4	NAS517-2-2 FLAT HEAD SCREW
12	212-00035-08	4	AN960-8 WASHER
13	212-00043-10	1	AN960-10L (THIN) WASHER
14	210-00117-03	6	AN365-1032A LOCK NUT
15	210-00117-02	4	AN365-832A LOCK NUT
16	382-00019-12	2	MALE ROD END BEARING
17	210-00116-03	2	AN315-3R JAM NUT
18	117-00542-06	1	PUSH ROD, 3/8" DIA, 7.50" LNG, TAPPED

NOTES:
1. DIMENSIONS: INCHES
2. DIMENSIONS ARE NOMINAL AND TOLERANCES ARE NOT IMPLIED UNLESS SPECIFICALLY STATED.
3. GSA28 IS PROVIDED WITH STANDARD CRANK ARM. FOR THE RV-6 ROLL INSTALLATION, THIS PART MUST BE REMOVED AND REPLACED WITH THE LONGER ARM (ITEM 2).
4. CASTLE NUT, 5/16 LOCK WASHER, AND AN960 516L WASHER ARE NOT INCLUDED IN SERVO MOUNTING KIT. THESE PARTS ARE INCLUDED WITH GSA28 AND MUST BE RE-USED.
5. TO INSTALL LONG CRANK ARM: REMOVE COTTER PIN, CASTLE NUT, 5/16 LOCK WASHER, AN960-516L WASHER, AND STANDARD CRANK ARM. INSTALL LONG ARM SUCH THAT HOLE AND SLOT MATE WITH ALIGNMENT PINS ON GSA28 OUPUT HUB. REPLACE CASTLE NUT, LOCK WASHER, AND AN960-516L WASHER. TIGHTEN CASTLE NUT UNTIL LOCK WASHER IS FULLY COMPRESSED, BUT DO NOT TIGHTEN TO MORE THAN 20 IN-LBS. THEN LOOSEN UNTIL ADJACENT CASTELLATION LINES UP WITH HOLE IN OUTPUT SHAFT. INSTALL NEW COTTER PIN (SUPPLIED IN MOUNTING KIT).
6. NOTE HAS BEEN REMOVED.
7. NOTE HAS BEEN REMOVED.
8. TIGHTEN #4-40 SCREWS USED TO ATTACH STOP BRACKET TO 8 ±1 IN-LBS.
9. NOTE HAS BEEN REMOVED.
10. STOP BRACKET SHOULD NOT BE USED AS THE PRIMARY MEANS OF LIMITING MOTION. THE AIRFRAME'S STOPS SHOULD LIMIT MOTION BEFORE THE SERVO CRANK ARM CONTACTS THE STOP BRACKET.
11. THREAD ENGAMENT BETWEEN ROD END BEARINGS (ITEM 16) AND ALUMINUM PUSH ROD (ITEM 18) MUST NOT BE LESS THAN 0.375".
12. AN3-21A BOLT (ITEM 4) ATTACHES PUSH ROD TO CONTROL STICK. SEE SHEET 2 FOR DETAILS.
13. PUSH ROD DIMENSIONS SHOWN IS APPROXIMATE.

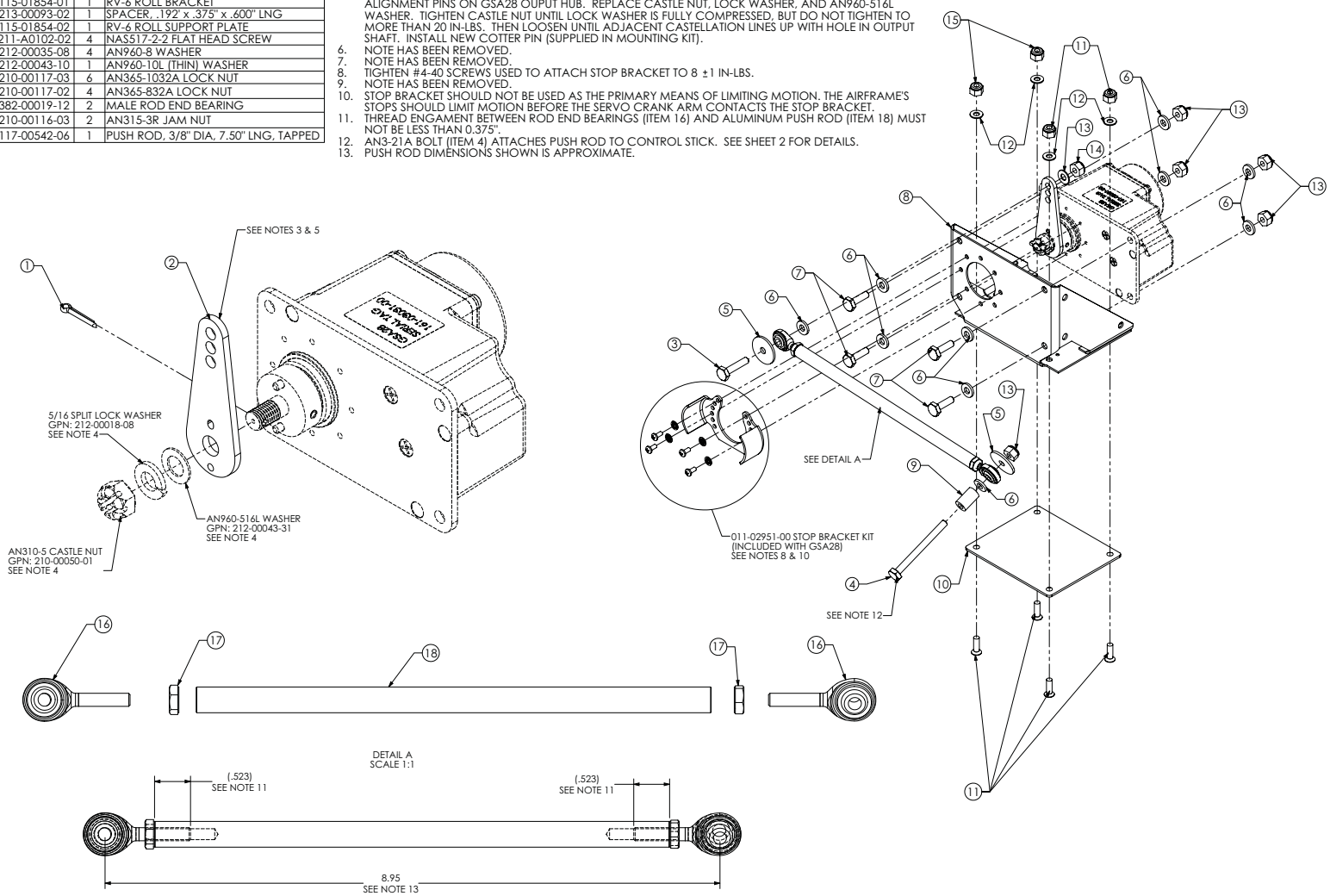

Figure 4-77 GSA 28 RV-6 Roll Mounting Kit P/N (P/N 011-02952-10)
Sheet 1 of 3

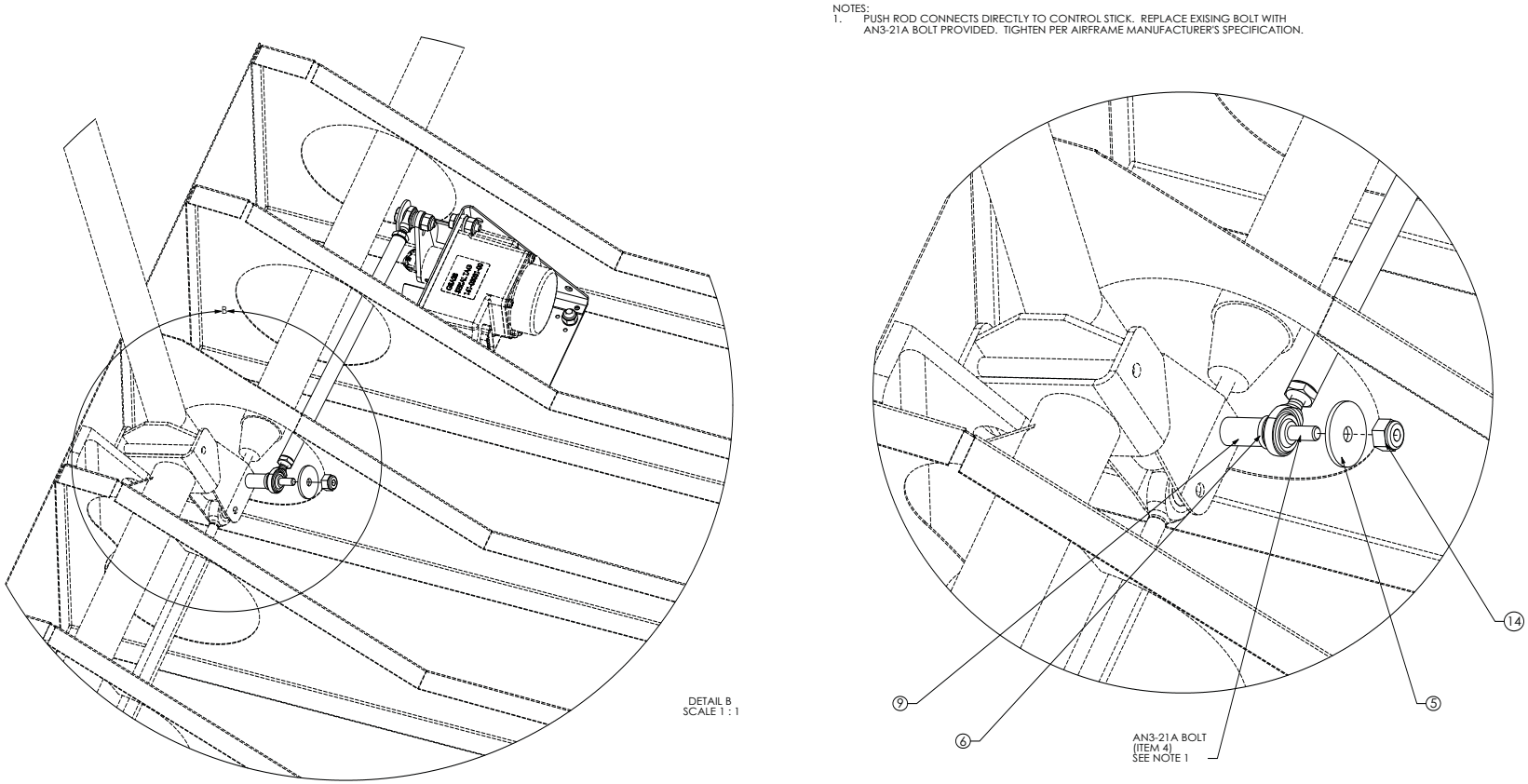

Figure 4-77 GSA 28 RV-6 Roll Mounting Kit P/N (P/N 011-02952-10)
Sheet 2 of 3

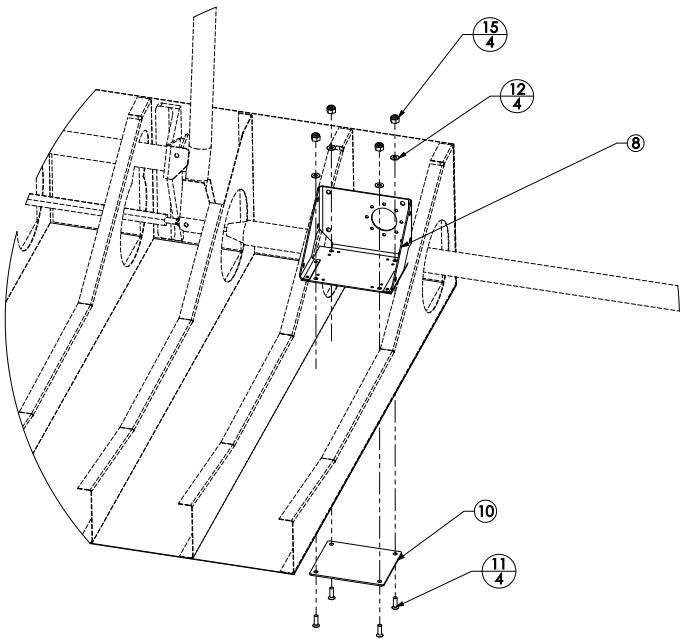

NOTES:
1. ATTACH MOUNTING BRACKET TO FLOOR AS SHOWN USING SUPPORT PLATE WITH #8 FLAT HEAD SCREWS, WASHERS, AND NUTS PROVIDED OR USE MS21055 CORNER NUT PLATES (NOT INCLUDED).
2. MATCH DRILL THROUGH FLOOR FOR #8 SCREWS ONCE BRACKET LOCATION HAS BEEN DETERMINED.
3. DIMENSION SHOWN IS APPROXIMATE. IT IS HIGHLY RECOMMENDED SERVO WITH BRACKET AND PUSH ROD ARE PLACED THEN INTERFERENCE AND FREEDOM OF MOTION ARE VERIFIED PRIOR TO DRILLING MOUNTING HOLES THROUGH FLOOR.
4. PUSH TUBE CLEARANCE HOLES IN FLOOR RIBS MAY NEED TO BE TRIMMED TO CREATE MORE CLEARANCE FOR SERVO PUSH ROD.

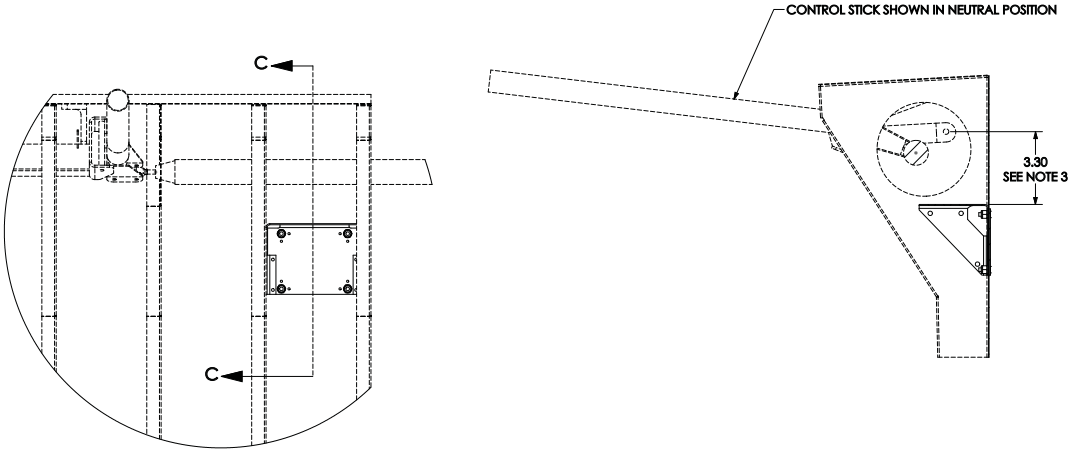

Figure 4-77 GSA 28 RV-6 Roll Mounting Kit P/N (P/N 011-02952-10)
Sheet 3 of 3

ITEM	GARMIN P/N	QTY	DESCRIPTION	RV-4 & PRE-SEPT 2006 RV-8	POST-SEPT 2006 RV-8
1	210-00117-03	4	AN365-1032A LOCK NUT	X	X
2	212-00035-10	10	AN960-10 WASHER	X	X
3	211-00090-05	1	AN3-7A BOLT	X	X
4	115-01854-03	1	RV-4/8 PITCH BRACKET, LEFT	X	X
5	211-00090-07	1	AN3-11A BOLT	X	X
6	213-00093-03	1	SPACER, .192x.375x.75 LNG	X	
	213-00093-04	1	SPACER, .192X.375X.875 LNG		X
7	211-00090-01	1	AN3-5A BOLT	X	
	211-00090-06	1	AN3-6A BOLT		X
8	212-00080-03	2	AN970-3 WASHER	X	X
9	115-01854-04	1	RV-4/8 PITCH BRACKET, RIGHT	X	X
10	211-00090-08	1	AN3-14A	X	
	211-00090-09	1	AN3-15A BOLT		X
11	211-00090-13	1	AN4-15A	SEE NOTE 5	X
12	382-00019-02	2	MALE ROD END BEARING	X	X
13	210-00116-03	2	AN315-3R JAM JUT	X	X
14	117-00542-00	1	PUSH ROD, 3/8 DIA, 2.25" LNG, TAPPED	X	X
15	212-00043-10	1	AN960-10L (THIN) WASHER	X	X

NOTES:
1. DIMENSIONS: INCHES.
2. DIMENSIONS ARE NOMINAL AND TOLERANCES ARE NOT IMPLIED UNLESS SPECIFICALLY STATED.
3. HOLE MUST BE DRILLED THROUGH BELL CRANK TO ATTACH PUSH ROD. SEE SHEET 2 FOR HOLE SIZE AND LOCATION.
4. SINGLE AN960-10 WASHER (ITEM 2) MUST BE PLACED IN-BETWEEN BELL CRANK HALVES CONCENTRIC WITH DRILLED HOLES.
5. AN4-15A BOLT PROVIDED IS TO BE USED WITH POST-SEPT 2006 RV-8 ONLY. FOR RV-4 AND PRE-SEPT 2006 RV-8, USE BOLT PROVIDED WITH AIRFRAME KIT.
6. NUT AND WASHERS FOR AN4 BOLT ARE NOT PROVIDED IN GSA28 MOUNTING KIT. USE PARTS PROVIDED WITH AIRFRAME KIT. TIGHTEN PER AIRFRAME MANUFACTURER'S SPECIFICATION.
7. NOTE HAS BEEN REMOVED.
8. NOTE HAS BEEN REMOVED.
9. THREAD ENGAGEMENT BETWEEN ROD END BEARINGS (ITEM 12) AND ALUMINUM PUSH ROD (ITEM 14) MUST NOT BE LESS THAN 0.375".

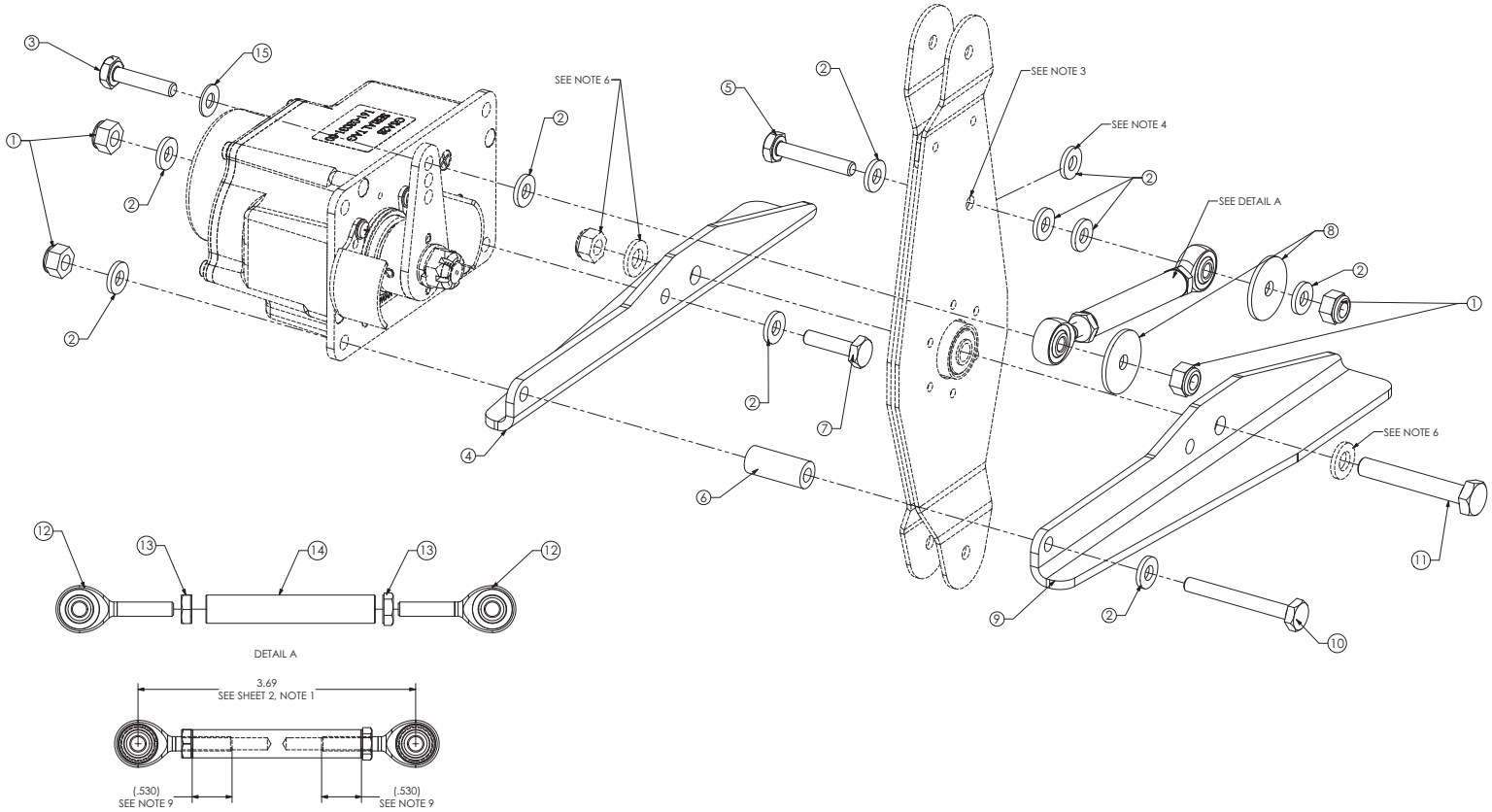

Figure 4-78 GSA 28 RV-4/8 Pitch Mounting Kit (P/N 011-02952-11)
Sheet 1 of 4

GSA28 STOP BRACKET POSITION, RV-4/8
(ALL VERSIONS)

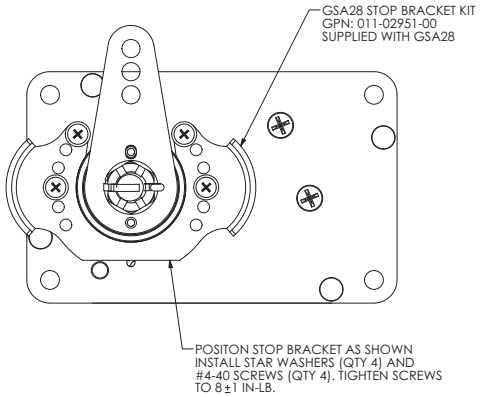

BELL CRANK MODIFICATION, RV-4/8
(ALL VERSIONS)

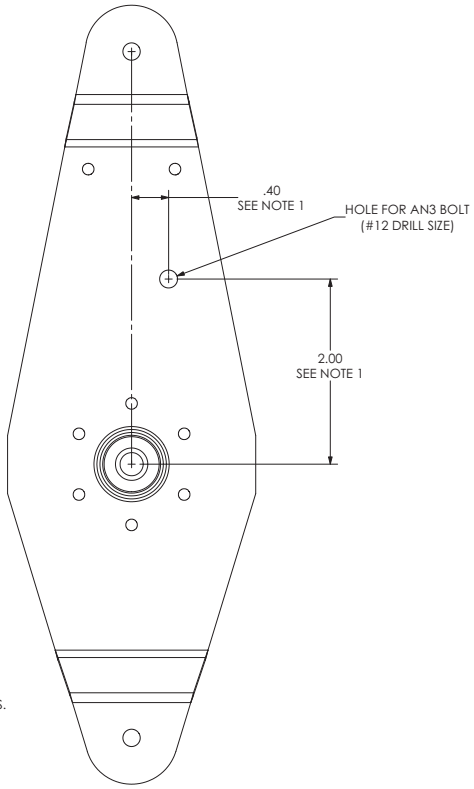

NOTES:
1. FOR BEST AUTOPILOT PERFORMANCE, ANGULAR TRAVEL OF THE GSA28 SHOULD BE MAXIMIZED. AIRCRAFT ATTACHMENT POINT, SERVO ATTACHMENT POINT, AND PUSH ROD LENGTH ARE SHOWN FOR GUIDANCE ONLY. DEVIATING FROM THIS GUIDANCE IN EFFORT TO INCREASE SERVO TRAVEL IS PERMISSIBLE PROVIDED IT DOES NOT RESULT IN AN OVER-CENTER CONDITION. TO REDUCE THE RISK OF AN OVER-CENTER CONDITION, IT IS HIGHLY RECOMMENDED THE GSA28 STOP BRACKET BE INSTALLED AS SHOWN. WITH THE GSA28 STOP BRACKET INSTALLED, IT IS RECOMMENDED THE SERVO CRANK ARM STOPS JUST SHORT OF HITTING THE STOP BRACKET AT FULL TRAVEL IN BOTH DIRECTIONS. BEST CASE SCENARIO WOULD BE TO ACCOMPLISH THIS WITH THE PUSH ROD ATTACHED TO THE OUTERMOST HOLE IN SERVO. IF ANGULAR SERVO TRAVEL CANNOT BE MAXIMIZED USING THE OUTERMOST HOLE, USING THE MIDDLE HOLE IS RECOMMENDED PROVIDED THERE IS NO RISK OF CREATING AN OVER-CENTER CONDITION.

Figure 4-78 GSA 28 RV-4/8 Pitch Mounting Kit (P/N 011-02952-11)
Sheet 2 of 4

RV-4 AND PRE-SEPTEMBER 2006 RV-8 INSTALLATION

NOTES:
1. REMOVE EXISTING PITCH BELL CRANK BRACKETS AND REPLACE WITH SERVO MOUNTING BRACKETS (ITEMS 4 AND 9). MATCH-DRILL NEW BRACKETS TO MATCH HOLE PATTERN ON ORIGINAL BRACKET. FASTEN TO AIRFRAME USING ORIGINAL RIVET HOLES. FASTENERS USE FOR MOUNTING THE BRACKETS TO THE AIRFRAME ARE NOT INCLUDED IN MOUNTING KIT.

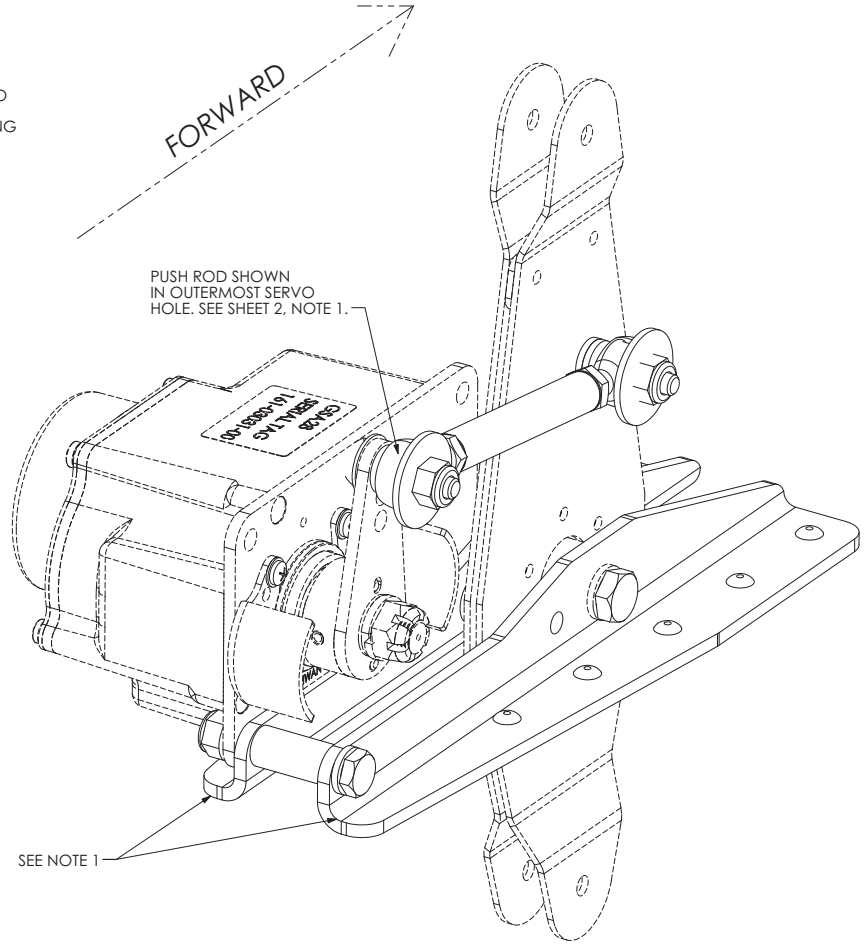

Figure 4-78 GSA 28 RV-4/8 Pitch Mounting Kit (P/N 011-02952-11)
Sheet 3 of 4

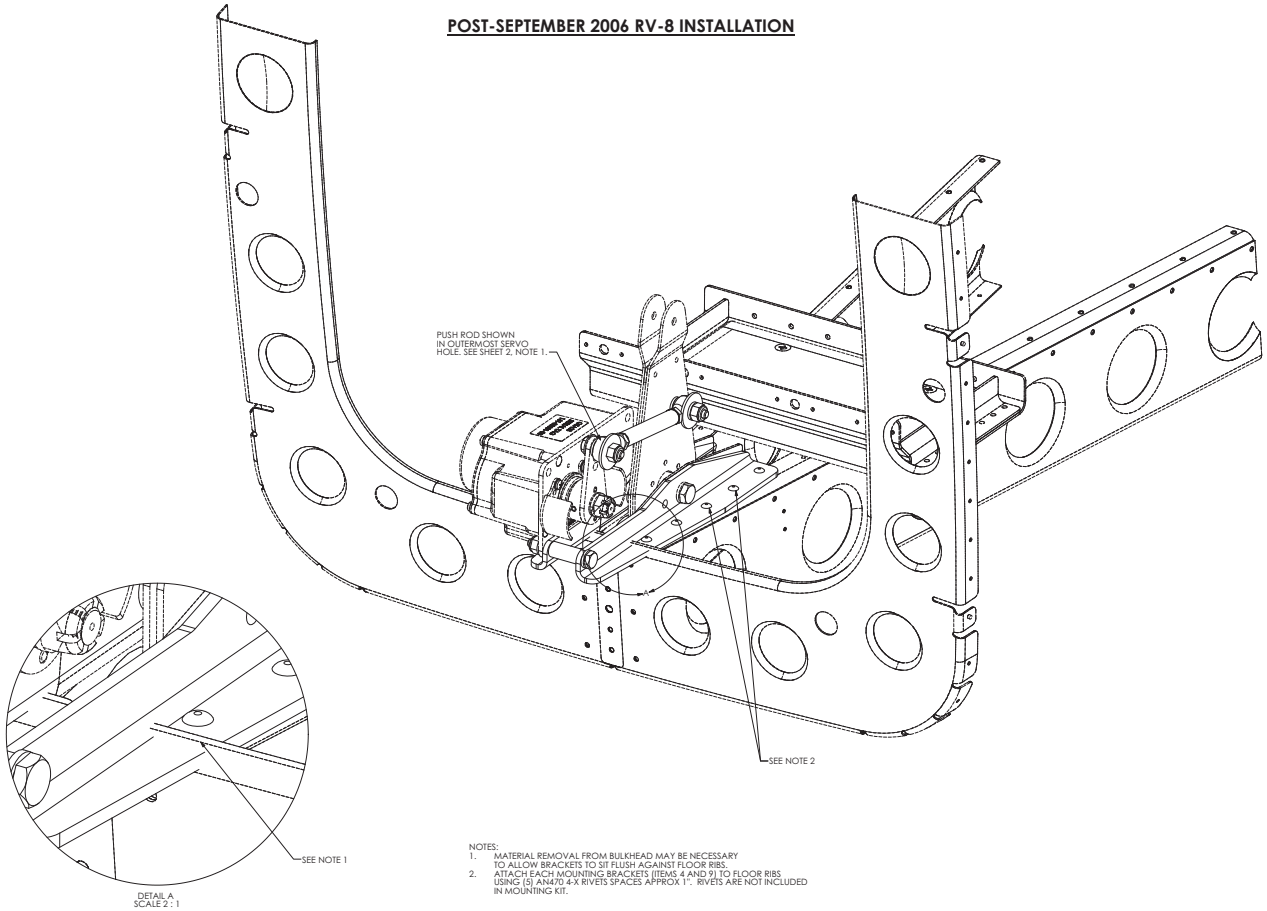

Figure 4-78 GSA 28 RV-4/8 Pitch Mounting Kit (P/N 011-02952-11)
Sheet 4 of 4

RV-7/8/10 RIGHT WING ROLL MOUNTING KIT FOR GSA28
GARMIN PART NUMBER 011-02952-12

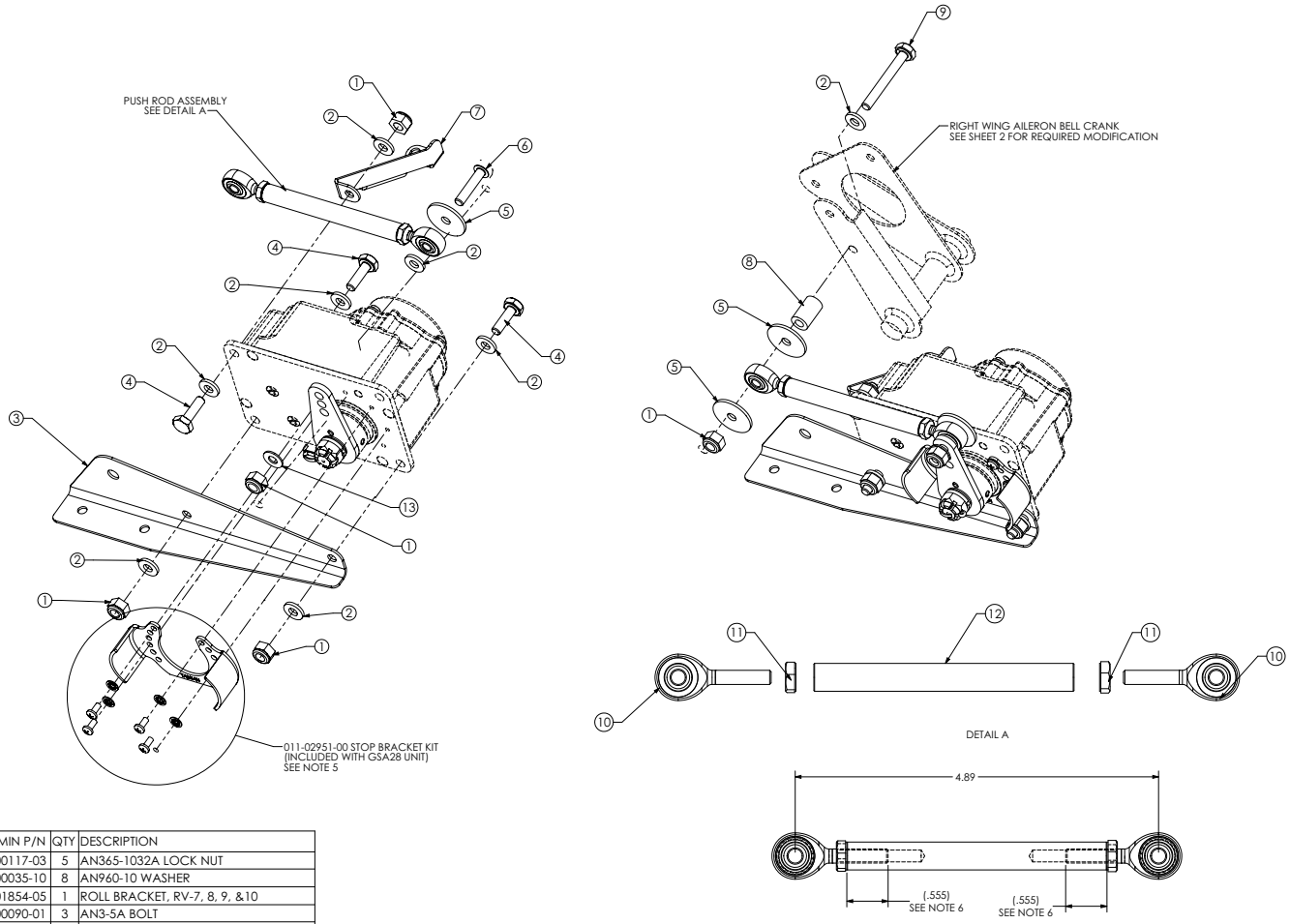

ITEM	GARMIN P/N	QTY	DESCRIPTION
1	210-00117-03	5	AN365-1032A LOCK NUT
2	212-00035-10	8	AN960-10 WASHER
3	115-01854-05	1	ROLL BRACKET, RV-7, 8, 9, &10
4	211-00090-01	3	AN3-5A BOLT
5	212-00080-03	3	AN970-3 WASHER
6	211-00090-05	1	AN3-7A BOLT
7	115-01854-06	1	ROLL SUPPORT, RV-7, 8, 9, &10
8	213-00093-02	1	SPACER, .192" x .375" x. 600" LNG
9	211-00090-08	1	AN3-14A BOLT
10	382-00019-02	2	MALE ROD END BEARING
11	210-00116-03	2	AN315-3R JAM NUT
12	117-00542-09	1	PUSH ROD, 3/8" DIA, 3.50" LNG, TAPPED
13	212-00043-10	1	AN960-10L (THIN) WASHER

NOTES:
1. DIMENSIONS: INCHES
2. DIMENSIONS ARE NOMINAL AND TOLERANCES ARE NOT IMPLIED UNLESS SPECIFICALLY STATED.
3. NOTE HAS BEEN REMOVED.
4. NOTE HAS BEEN REMOVED.
5. TIGHTEN #4-40 SCREWS FOR STOP BRACKET TO 8 ±1 IN-LBS.
6. THREAD ENGAGMENT BETWEEN ROD END (ITEM 10) AND ALUMINUM PUSH ROD (ITEM 12) MUST NOT BE LESS THAN .375".

Figure 4-79 GSA 28 RV-7/8/10 Roll Mounting Kit (P/N 011-02952-12)
Sheet 1 of 2

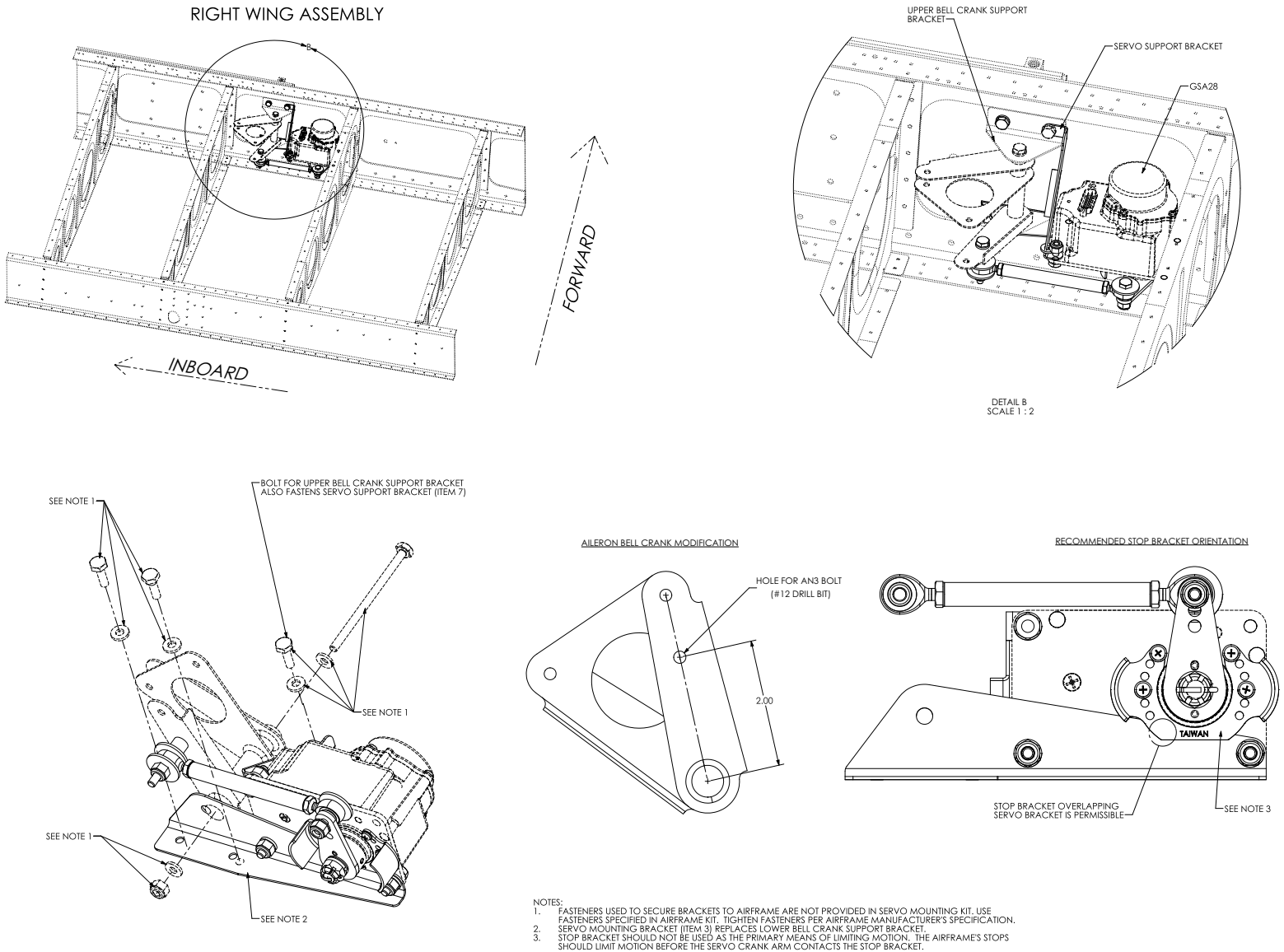

NOTES:
1. FASTENERS USED TO SECURE BRACKETS TO AIRFRAME ARE NOT PROVIDED IN SERVO MOUNTING KIT. USE FASTENERS SPECIFIED IN AIRFRAME KIT. TIGHTEN FASTENERS PER AIRFRAME MANUFACTURER'S SPECIFICATION.
2. SERVO MOUNTING BRACKET (ITEM 3) REPLACES LOWER BELL CRANK SUPPORT BRACKET.
3. STOP BRACKET SHOULD NOT BE USED AS THE PRIMARY MEANS OF LIMITING MOTION. THE AIRFRAME'S STOPS SHOULD LIMIT MOTION BEFORE THE SERVO CRANK ARM CONTACTS THE STOP BRACKET.

Figure 4-79 GSA 28 RV-7/8/10 Roll Mounting Kit (P/N 011-02952-12)
Sheet 2 of 2

RV-9 RIGHT WING ROLL MOUNTING KIT
GARMIN PART NUMBER 011-02952-13

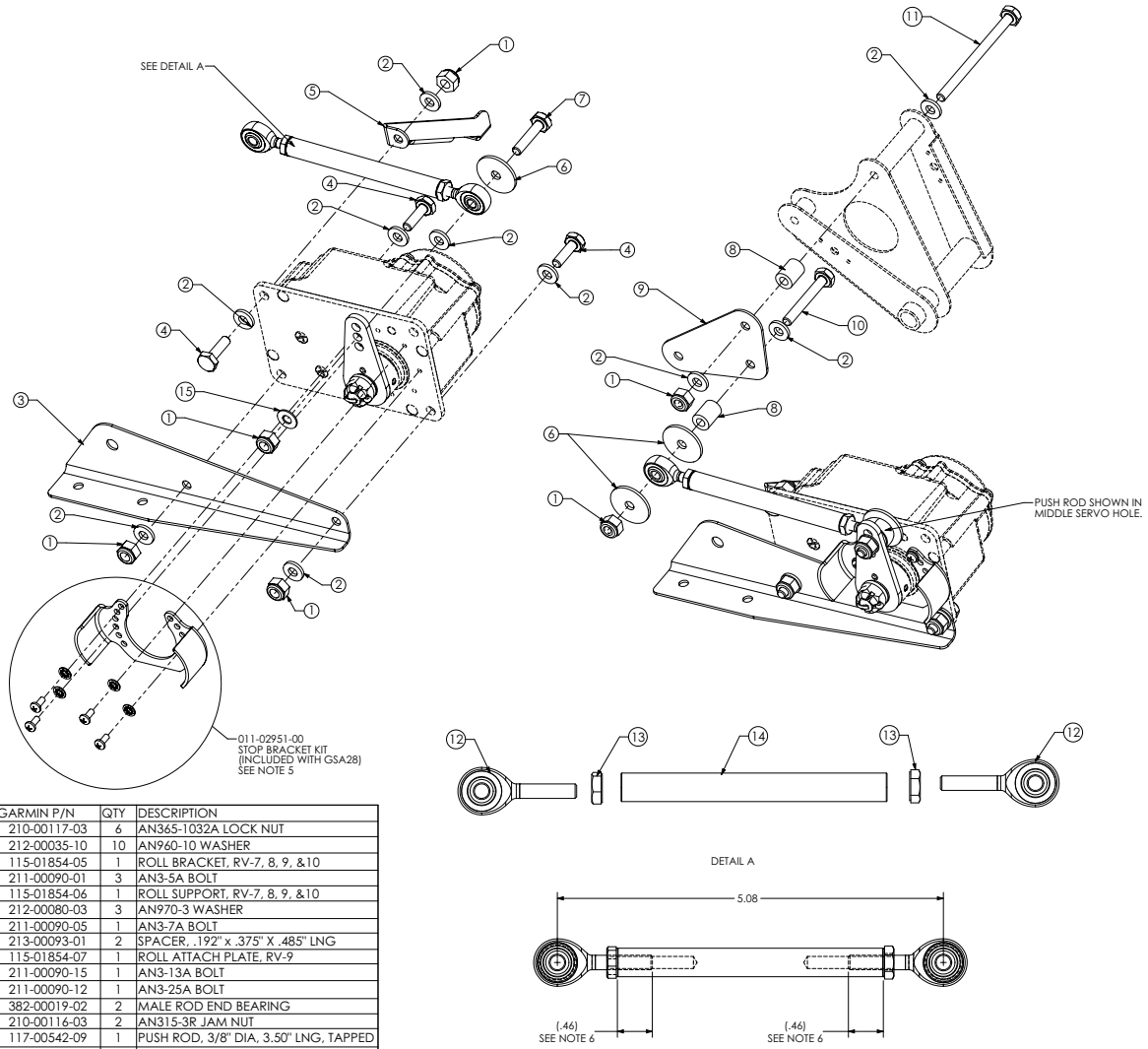

ITEM	GARMIN P/N	QTY	DESCRIPTION
1	210-00117-03	6	AN365-1032A LOCK NUT
2	212-00035-10	10	AN960-10 WASHER
3	115-01854-05	1	ROLL BRACKET, RV-7, 8, 9, &10
4	211-00090-01	3	AN3-5A BOLT
5	115-01854-06	1	ROLL SUPPORT, RV-7, 8, 9, &10
6	212-00080-03	3	AN970-3 WASHER
7	211-00090-05	1	AN3-7A BOLT
8	213-00093-01	2	SPACER, .192" x .375" X .485" LNG
9	115-01854-07	1	ROLL ATTACH PLATE, RV-9
10	211-00090-15	1	AN3-13A BOLT
11	211-00090-12	1	AN3-25A BOLT
12	382-00019-02	2	MALE ROD END BEARING
13	210-00116-03	2	AN315-3R JAM NUT
14	117-00542-09	1	PUSH ROD, 3/8" DIA, 3.50" LNG, TAPPED
15	212-00043-10	1	AN960-10L (THIN) WASHER

NOTES:
1. DIMENSIONS: INCHES
2. DIMENSIONS ARE NOMINAL AND TOLERANCES ARE NOT IMPLIED UNLESS SPECIFICALLY STATED.
3. NOTE DELETED.
4. NOTE DELETED.
5. TIGHTEN #4-40 SCREWS FOR STOP BRACKET TO 8 ±1 IN-LBS.
6. THREAD ENGAGMENT BETWEEN ROD END (ITEM 12) AND ALUMINUM PUSH ROD (ITEM 14) MUST NOT BE LESS THAN .375".

Figure 4-80 GSA 28 RV-9 Roll Mounting Kit P/N (011-02952-13)
Sheet 1 of 2

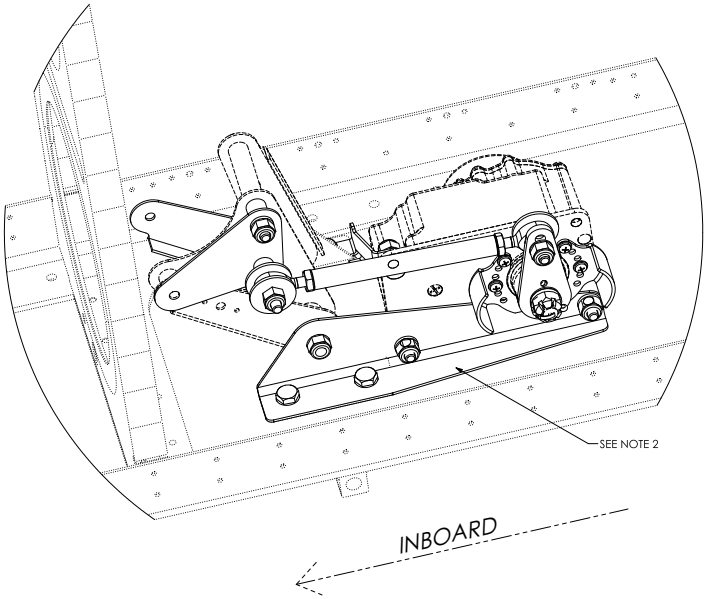

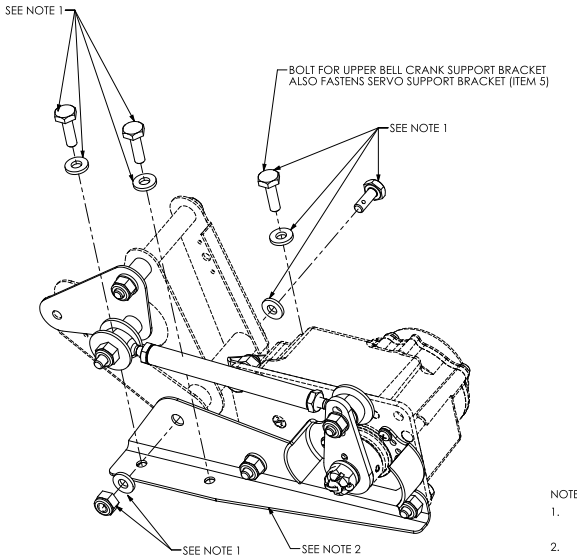

RECOMMENDED STOP BRACKET ORIENTATION

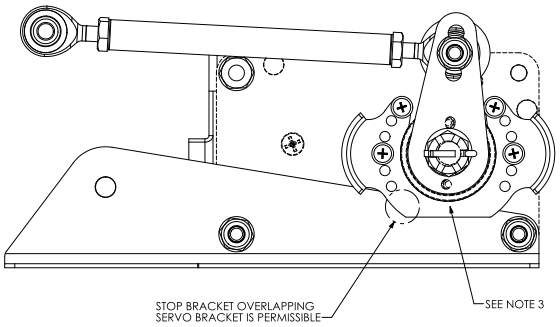

NOTES:

1. FASTENERS USED TO SECURE BRACKETS TO AIRFRAME ARE NOT PROVIDED IN SERVO MOUNTING KIT. USE FASTENERS SPECIFIED IN AIRFRAME KIT. TIGHTEN FASTENERS PER AIRFRAME MANUFACTURER'S SPECIFICATION.
2. SERVO MOUNTING BRACKET (ITEM 3) REPLACES LOWER BELL CRANK SUPPORT BRACKET.
3. STOP BRACKET SHOULD NOT BE USED AS THE PRIMARY MEANS OF LIMITING MOTION. THE AIRFRAME'S STOPS SHOULD LIMIT MOTION BEFORE THE SERVO CRANK ARM CONTACTS THE STOP BRACKET.

Figure 4-80 GSA 28 RV-9 Roll Mounting Kit P/N (011-02952-13)
Sheet 2 of 2

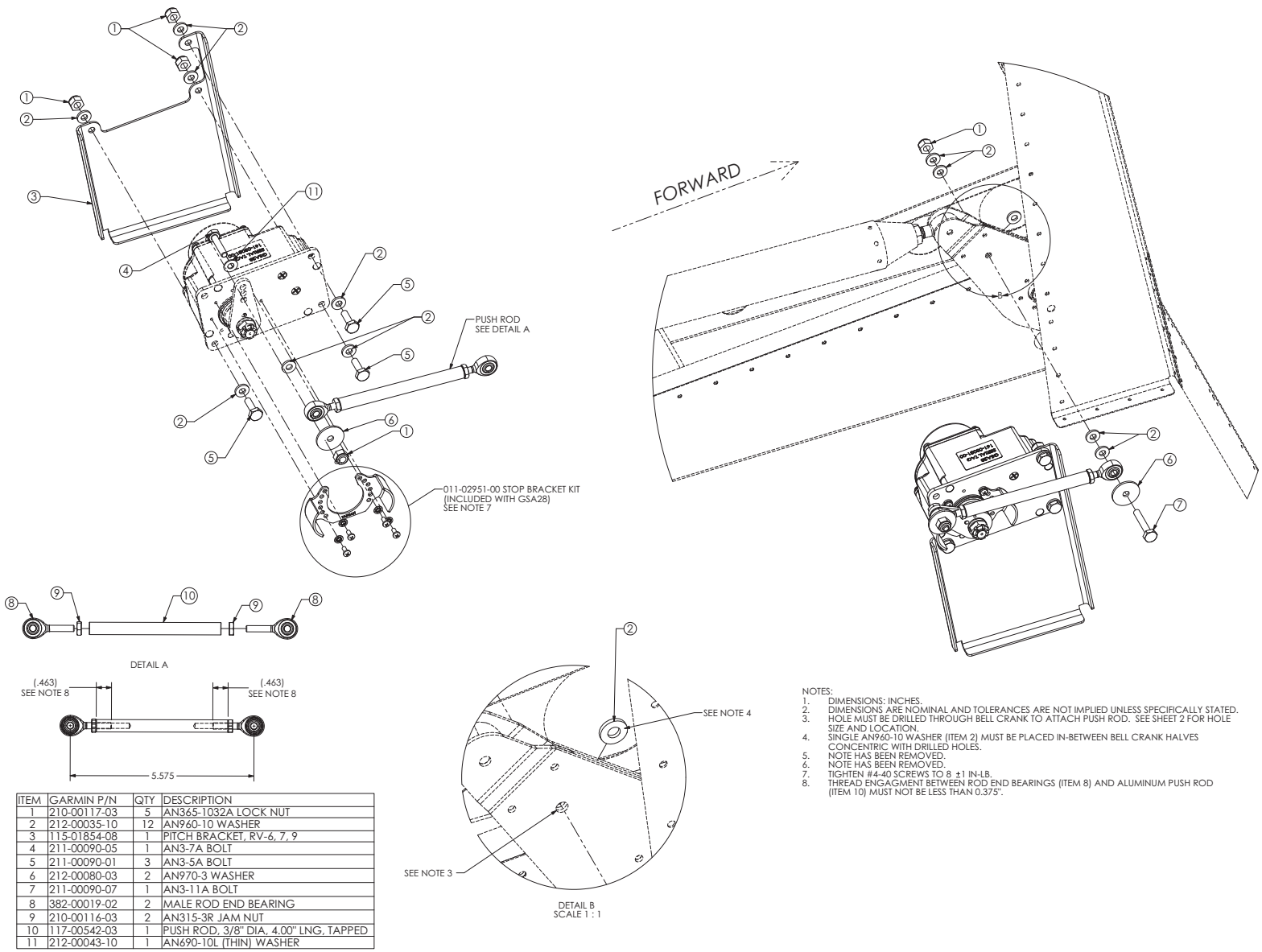

ITEM	GARMIN P/N	QTY	DESCRIPTION
1	210-00117-03	5	AN365-1032A LOCK NUT
2	212-00035-10	12	AN960-10 WASHER
3	115-01854-08	1	PITCH BRACKET, RV-6, 7, 9
4	211-00090-05	1	AN3-7A BOLT
5	211-00090-01	3	AN3-5A BOLT
6	212-00080-03	2	AN970-3 WASHER
7	211-00090-07	1	AN3-11A BOLT
8	382-00019-02	2	MALE ROD END BEARING
9	210-00116-03	2	AN315-3R JAM NUT
10	117-00542-03	1	PUSH ROD, 3/8" DIA, 4.00" LNG, TAPPED
11	212-00043-10	1	AN690-10L (THIN) WASHER

NOTES:
1. DIMENSIONS: INCHES.
2. DIMENSIONS ARE NOMINAL AND TOLERANCES ARE NOT IMPLIED UNLESS SPECIFICALLY STATED.
3. HOLE MUST BE DRILLED THROUGH BELL CRANK TO ATTACH PUSH ROD. SEE SHEET 2 FOR HOLE SIZE AND LOCATION.
4. SINGLE AN960-10 WASHER (ITEM 2) MUST BE PLACED IN-BETWEEN BELL CRANK HALVES CONCENTRIC WITH DRILLED HOLES.
5. NOTE HAS BEEN REMOVED.
6. NOTE HAS BEEN REMOVED.
7. TIGHTEN #4-40 SCREWS TO 8 ±1 IN-LB.
8. THREAD ENGAGMENT BETWEEN ROD END BEARINGS (ITEM 8) AND ALUMINUM PUSH ROD (ITEM 10) MUST NOT BE LESS THAN 0.375".

Figure 4-81 GSA 28 RV-6/7/9 Mounting Kit (P/N 011-02952-14)
Sheet 1 of 2

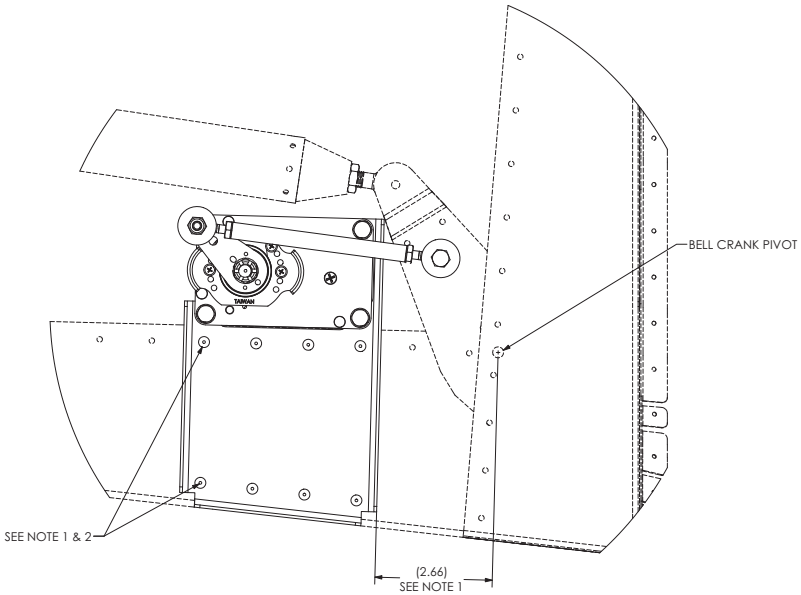

SCALE 1:1

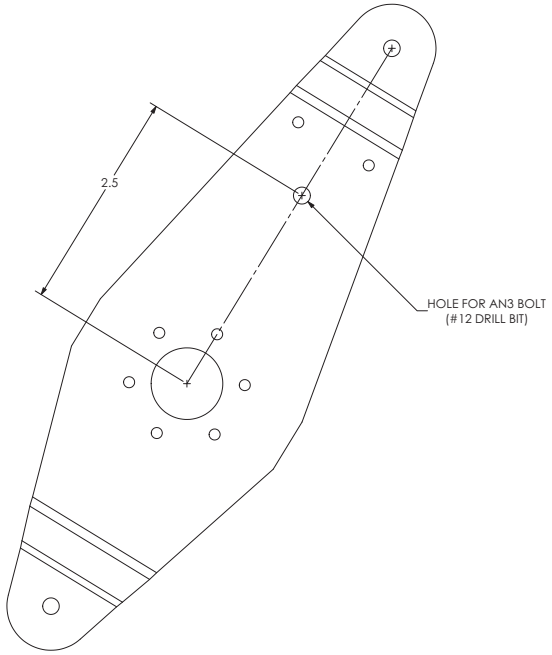

RECOMMDNED STOP BRACKET ORIENTATION

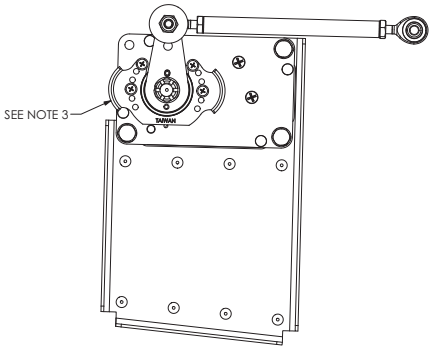

NOTES:
1. BRACKET LOCATION IS SHOWN CENTERED OVER 3, 4, 5, & 6 PRE-PUNCHED RIVET HOLES AFT OF THE BELL CRANK PIVOT. THIS IS THE RECOMENDED BRACKET LOCATION. DIMENSION IS SHOWN FOR REFERENCE ONLY.
2. ATTACH MOUNTING BRACKET TO AIRFRAME FLOOR RIB USING A MINIMUM OF TWO ROWS OF FOUR AN470 4-X RIVETS SPACED A MINIMUM OF 1" APART. RIVETS ARE NOT INCLUDED IN SERVO MOUNTING KIT.
3. STOP BRACKET SHOULD NOT BE USED AS THE PRIMARY MEANS OF LIMITING MOTION. THE AIRFRAME'S STOPS SHOULD LIMIT MOTION BEFORE THE SERVO CRANK ARM CONTACTS THE STOP BRACKET.

Figure 4-81 GSA 28 RV-6/7/9 Mounting Kit (P/N 011-02952-14)
Sheet 2 of 2

ITEM	GARMIN P/N	QTY	DESCRIPTION
1	211-00090-01	4	AN3-5A BOLT
2	212-00035-10	14	AN960-10 WASHER
3	212-00080-03	2	AN970-3 WASHER
4	115-01854-09	1	RV-10/14 PITCH BRACKET
5	211-00090-05	1	AN3-7A BOLT
6	210-00117-03	6	AN365-1032A LOCK NUT
7	211-00090-07	1	AN3-11A BOLT
8	382-00019-02	2	MALE ROD END BEARING
9	210-00116-03	2	AN315-3R JAM NUT
10	117-00542-08	1	PUSH ROD, 3/8 DIA, 3.25" LNG, TAPPED
11	212-00043-10	1	AN960-10L (THIN) WASHER

TABLE 1

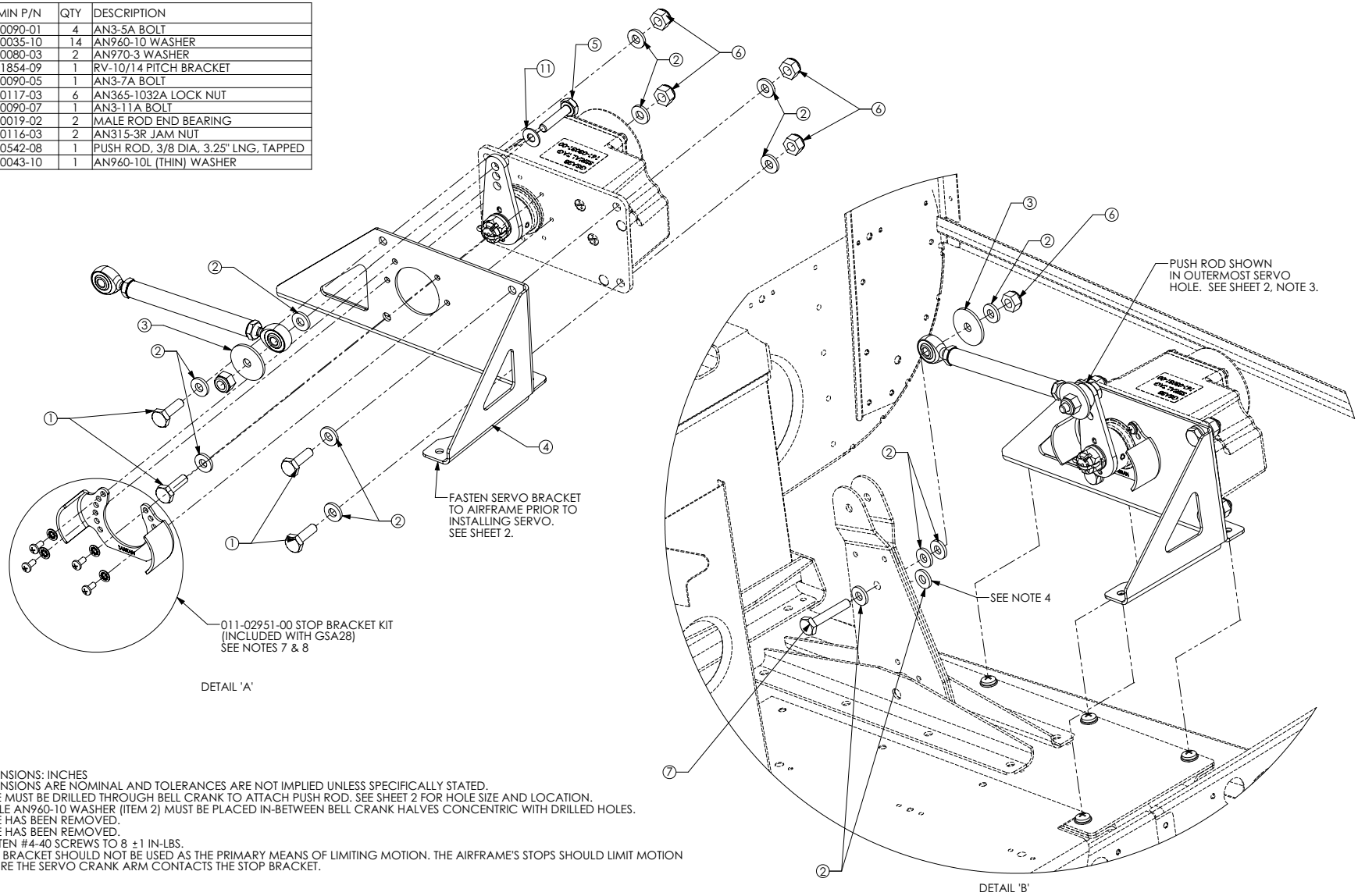

NOTES:
1. DIMENSIONS: INCHES
2. DIMENSIONS ARE NOMINAL AND TOLERANCES ARE NOT IMPLIED UNLESS SPECIFICALLY STATED.
3. HOLE MUST BE DRILLED THROUGH BELL CRANK TO ATTACH PUSH ROD. SEE SHEET 2 FOR HOLE SIZE AND LOCATION.
4. SINGLE AN960-10 WASHER (ITEM 2) MUST BE PLACED IN-BETWEEN BELL CRANK HALVES CONCENTRIC WITH DRILLED HOLES.
5. NOTE HAS BEEN REMOVED.
6. NOTE HAS BEEN REMOVED.
7. TIGHTEN #4-40 SCREWS TO 8 ±1 IN-LBS.
8. STOP BRACKET SHOULD NOT BE USED AS THE PRIMARY MEANS OF LIMITING MOTION. THE AIRFRAME'S STOPS SHOULD LIMIT MOTION BEFORE THE SERVO CRANK ARM CONTACTS THE STOP BRACKET.

Figure 4-82 GSA 28 RV-10 Pitch Mounting Kit (P/N 011-02952-15)
Sheet 1 of 2

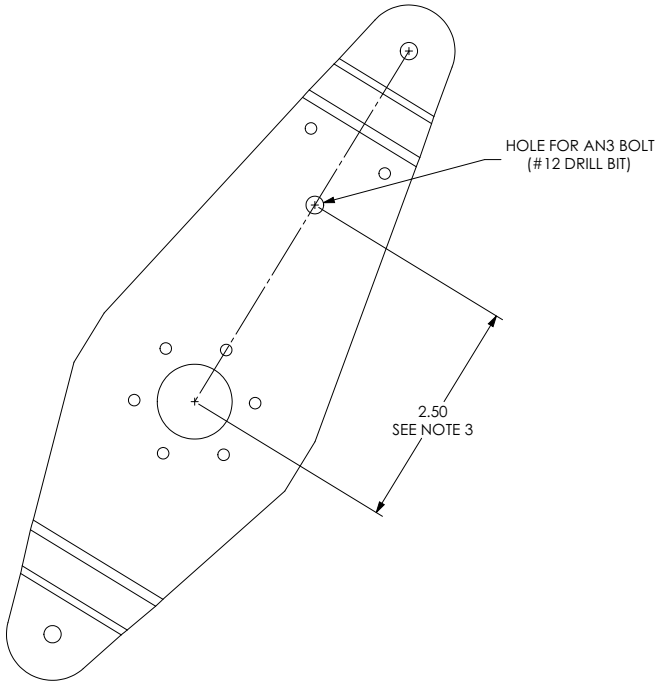

DETAIL 'C'

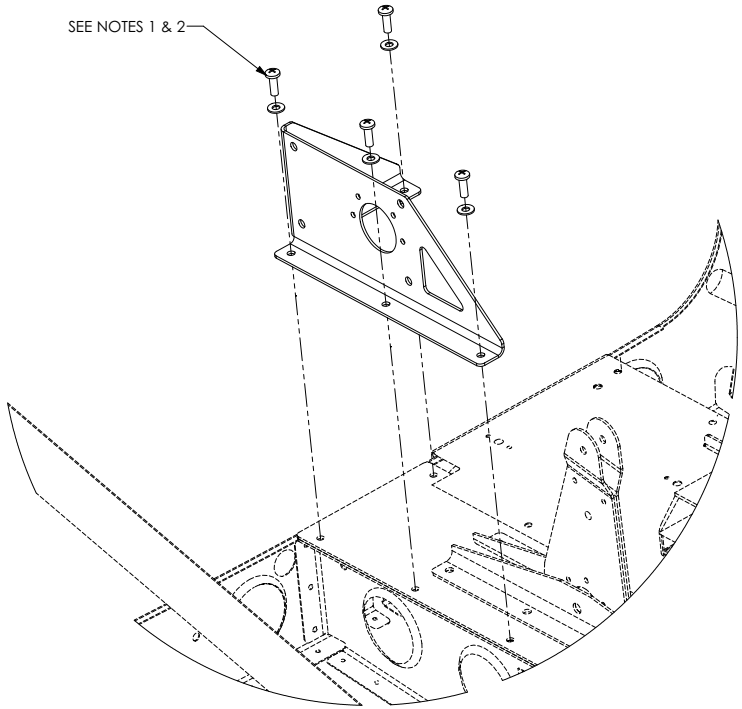

DETAIL 'D'

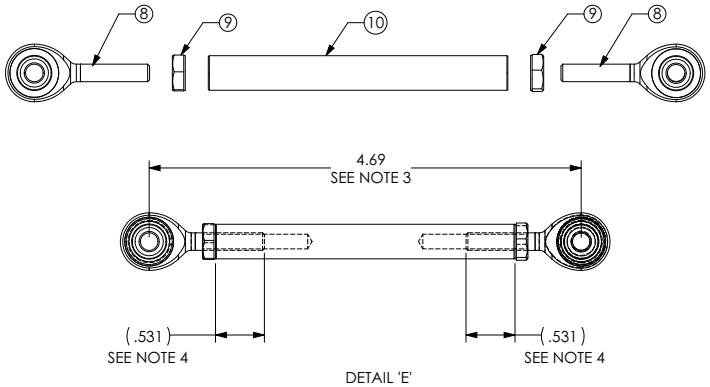

DETAIL 'E'

NOTE:
1. MOUNTING BRACKET SHOULD BE FASTENED TO AIRFRAME PRIOR TO INSTALLING SERVO.
2. HOLES IN SERVO MOUNTING BRACKET ALIGN WITH EXISTING HOLES IN AIRFRAME. REMOVE FASTENERS FROM THESE HOLES TO MOUNT BRACKET TO AIRFRAME. RE-USE THESE FASTENERS TO ATTACH SERVO BRACKET. TIGHTEN PER AIRFRAME MANUFACTURER'S SPECIFICATION.
3. FOR BEST AUTOPILOT PERFORMANCE, ANGULAR TRAVEL OF THE GSA28 SHOULD BE MAXIMIZED. IT IS HIGHLY RECOMMENDED THE GSA28 STOP BRACKET BE USED TO AVOID AN OVER-CENTER CONDITION. WITH THE GSA28 STOP BRACKET INSTALLED, IT IS RECOMMENDED THE SERVO CRANK ARM STOPS JUST SHORT OF HITTING THE STOP BRACKET AT FULL TRAVEL IN BOTH DIRECTIONS. BEST CASE SCENARIO WOULD BE TO ACCOMPLISH THIS WITH THE PUSH ROD ATTACHED TO THE OUTERMOST HOLE. AIRCRAFT ATTACHMENT POINTS AND PUSH ROD LENGTH SHOWN IN DETAIL 'C' AND 'E' ARE FOR GUIDANCE ONLY. DEVIATE AS NECESSARY TO INCREASE SERVO TRAVEL. IF ANGULAR SERVO TRAVEL CANNOT BE MAXIMIZED USING THE OUTERMOST HOLE IN SERVO, USING THE MIDDLE HOLE IS RECOMMENDED PROVIDED THERE IS NO RISK OF CREATING AN OVER-CENTER CONDITION.
4. THREAD ENGAGEMENT BETWEEN ROD END BEARINGS (ITEM 8) AND ALUMINUM PUSH ROD (ITEM 10) MUST NOT BE LESS THAN 0.375".

Figure 4-82 GSA 28 RV-10 Pitch Mounting Kit (P/N 011-02952-15)
Sheet 2 of 2

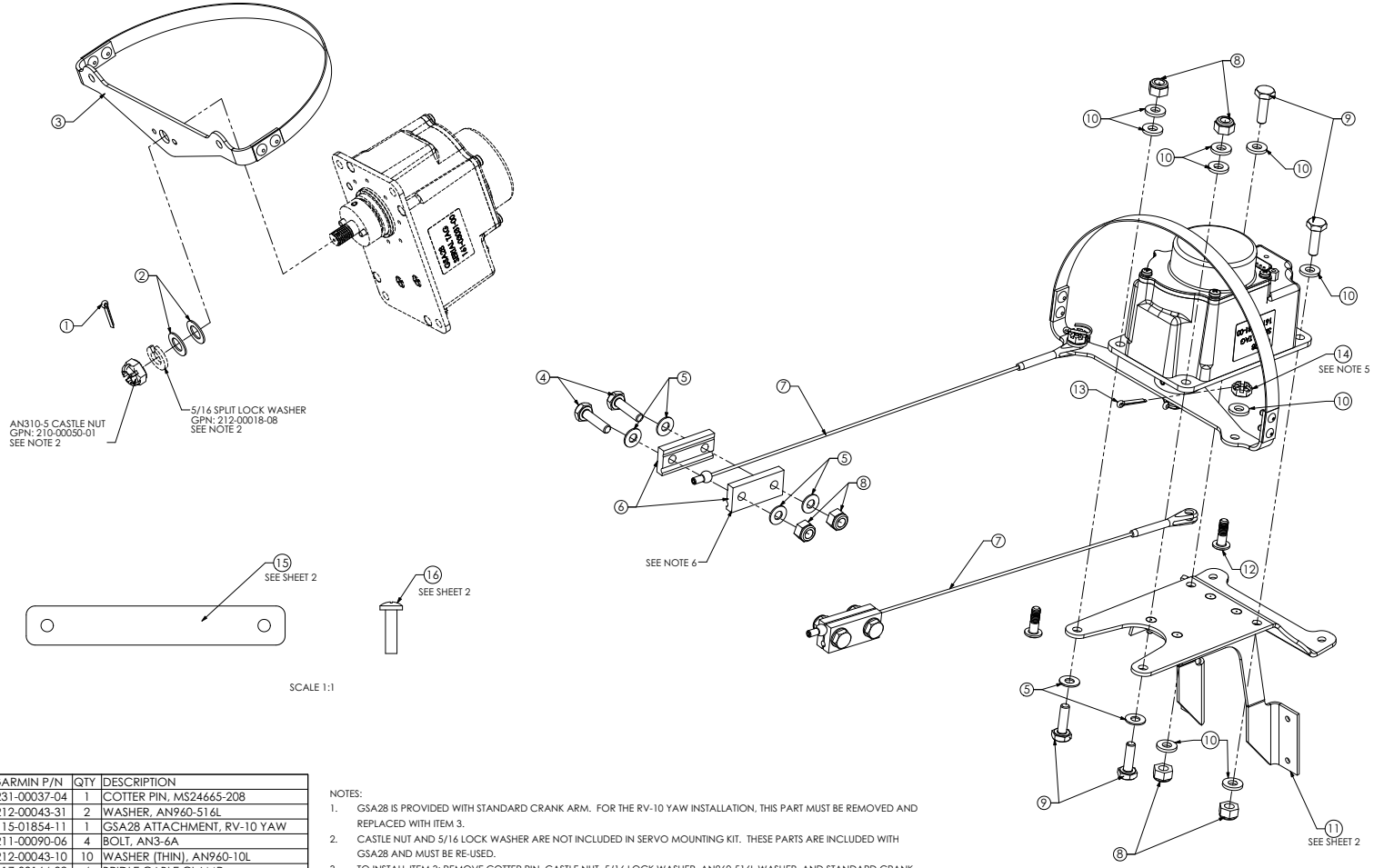

ITEM	GARMIN P/N	QTY	DESCRIPTION
1	231-00037-04	1	COTTER PIN, MS24665-208
2	212-00043-31	2	WASHER, AN960-516L
3	115-01854-11	1	GSA28 ATTACHMENT, RV-10 YAW
4	211-00090-06	4	BOLT, AN3-6A
5	212-00043-10	10	WASHER (THIN), AN960-10L
6	117-00164-02	4	BRIDLE CABLE CLAMP
7	233-20027-00	2	BRIDLE CABLE, RV-10 YAW
8	210-00117-03	8	LOCK NUT, AN365-1032A
9	211-00090-01	4	BOLT, AN3-5A
10	212-00035-10	10	WASHER, AN960-10
11	115-01854-10	1	MOUNTING BRACKET, RV-10 YAW
12	211-00306-09	2	BOLT, CLEVIS, AN23-9
13	231-00037-05	2	COTTER PIN, MS24665-132
14	210-00134-03	2	CASTLE NUT, MS17826-3
15	115-01854-12	1	SPACER, RV-10 YAW BRACKET
16	211-A0010-46	4	SCREW, MS51957-46

NOTES:

1. GSA28 IS PROVIDED WITH STANDARD CRANK ARM. FOR THE RV-10 YAW INSTALLATION, THIS PART MUST BE REMOVED AND REPLACED WITH ITEM 3.
2. CASTLE NUT AND 5/16 LOCK WASHER ARE NOT INCLUDED IN SERVO MOUNTING KIT. THESE PARTS ARE INCLUDED WITH GSA28 AND MUST BE RE-USED.
3. TO INSTALL ITEM 3: REMOVE COTTER PIN, CASTLE NUT, 5/16 LOCK WASHER, AN960-516L WASHER, AND STANDARD CRANK ARM. INSTALL ITEM 3 SUCH THAT HOLE AND SLOT MATE WITH ALIGNMENT PINS ON GSA28 OUTPUT HUB. INSTALL TWO AN960-516L WASHERS, LOCK WASHER, AND CASTLE NUT. TIGHTEN CASTLE NUT UNTIL LOCK WASHER IS FULLY COMPRESSED, BUT DO NOT TIGHTEN TO MORE THAN 20 IN-LBS. THEN LOOSEN UNTIL ADJACENT CASTELLATION LINES UP WITH HOLE IN OUTPUT SHAFT. INSTALL NEW COTTER PIN (SUPPLIED IN MOUNTING KIT).
4. NOTE DELETED.
5. TIGHTEN MS17826-3 NUT (ITEM 14) UNTIL CASTELLATION LINES UP WITH HOLE IN CLEVIS BOLT (ITEM 12) AND INSTALL MS24665-132 COTTER PIN (ITEM 13). FORK END OF BRIDLE CABLE (ITEM 7) MUST BE FREE TO ROTATE RELATIVE TO ITEM 3.
6. SMALL RADIUS OF BRIDLE CABLE CLAMPS (ITEM 6) SHOULD MATE WITH BRIDLE CABLES (ITEM 7). LARGERADIUS OF BRIDLE CABLE CLAMPS MATE WITH YAW CONTROL CABLES. SEE SHEET 3 FOR DETAILS.

Figure 4-83 GSA 28 RV-10 Yaw Mounting Kit (P/N 011-02952-16)
Sheet 1 of 3

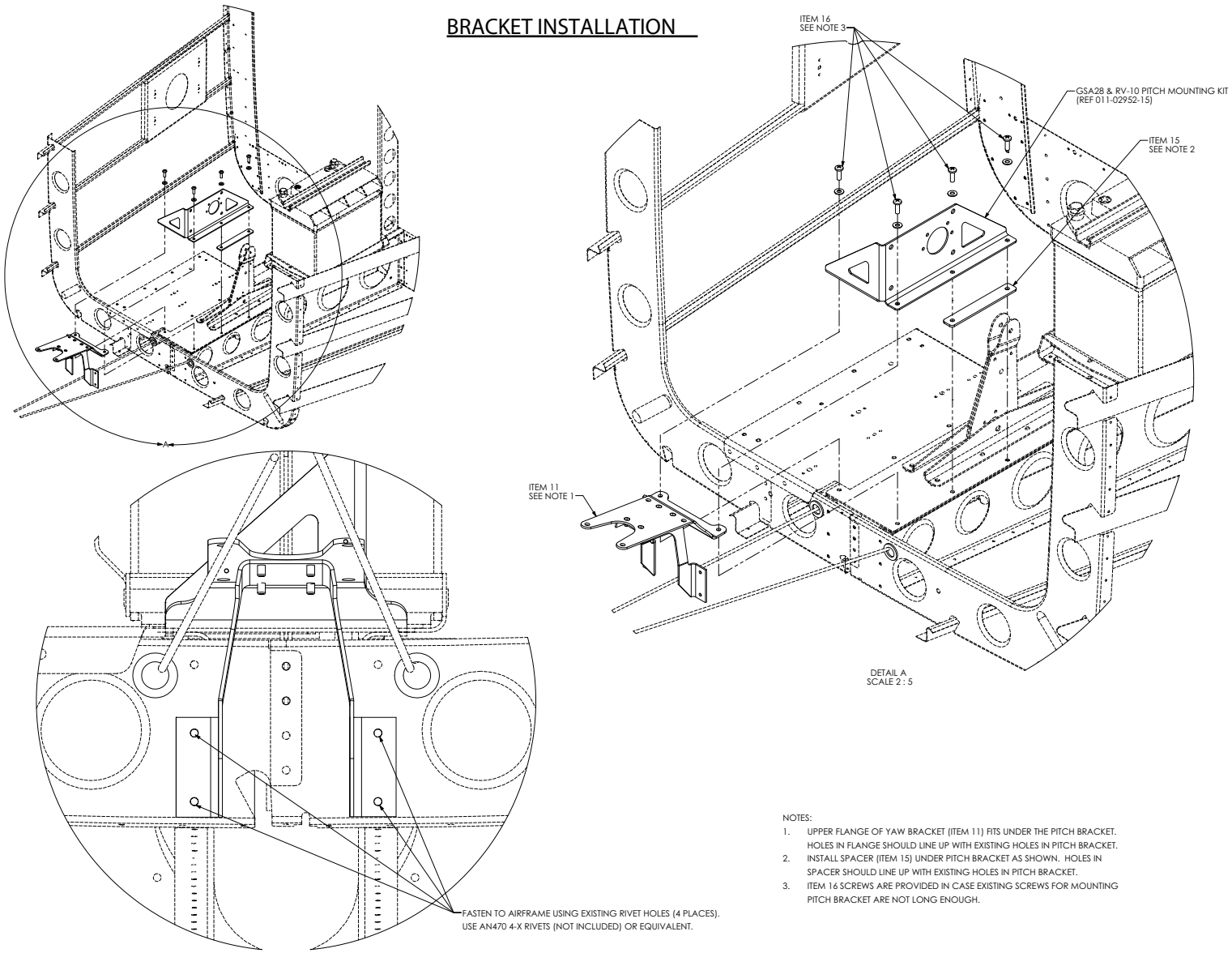

NOTES:

1. UPPER FLANGE OF YAW BRACKET (ITEM 11) FITS UNDER THE PITCH BRACKET. HOLES IN FLANGE SHOULD LINE UP WITH EXISTING HOLES IN PITCH BRACKET.
2. INSTALL SPACER (ITEM 15) UNDER PITCH BRACKET AS SHOWN. HOLES IN SPACER SHOULD LINE UP WITH EXISTING HOLES IN PITCH BRACKET.
3. ITEM 16 SCREWS ARE PROVIDED IN CASE EXISTING SCREWS FOR MOUNTING PITCH BRACKET ARE NOT LONG ENOUGH.

Figure 4-83 GSA 28 RV-10 Yaw Mounting Kit (P/N 011-02952-16)
Sheet 2 of 3

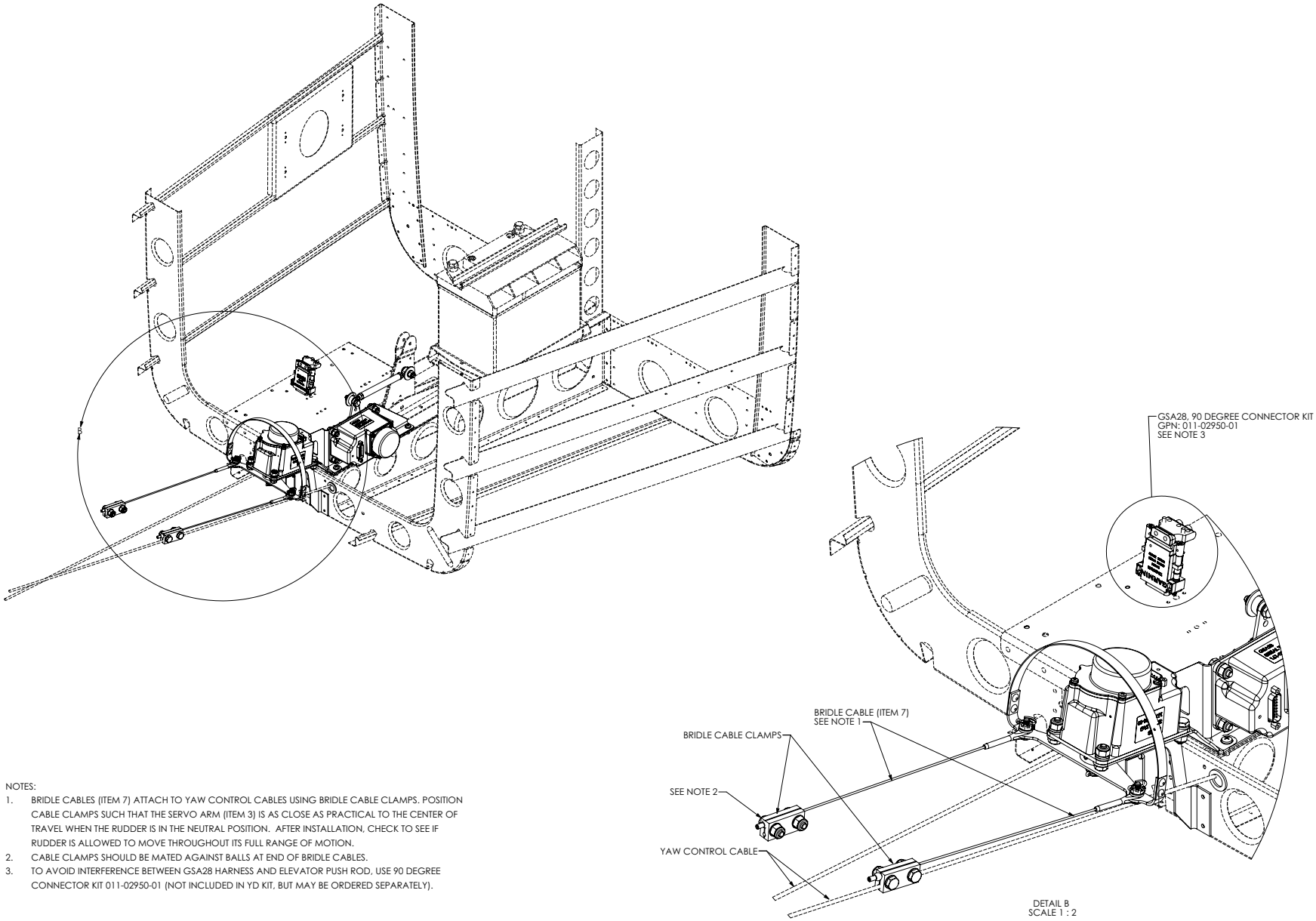

NOTES:

1. BRIDLE CABLES (ITEM 7) ATTACH TO YAW CONTROL CABLES USING BRIDLE CABLE CLAMPS. POSITION CABLE CLAMPS SUCH THAT THE SERVO ARM (ITEM 3) IS AS CLOSE AS PRACTICAL TO THE CENTER OF TRAVEL WHEN THE RUDDER IS IN THE NEUTRAL POSITION. AFTER INSTALLATION, CHECK TO SEE IF RUDDER IS ALLOWED TO MOVE THROUGHOUT ITS FULL RANGE OF MOTION.
2. CABLE CLAMPS SHOULD BE MATED AGAINST BALLS AT END OF BRIDLE CABLES.
3. TO AVOID INTERFERENCE BETWEEN GSA28 HARNESS AND ELEVATOR PUSH ROD, USE 90 DEGREE CONNECTOR KIT 011-02950-01 (NOT INCLUDED IN YD KIT, BUT MAY BE ORDERED SEPARATELY).

Figure 4-83 GSA 28 RV-10 Yaw Mounting Kit (P/N 011-02952-16)
Sheet 3 of 3

4.4.11 GAD 27 Electrical Control System Installation

This section contains general information as well as installation information for the GAD 27. Use this section to mount the GAD 27 unit.

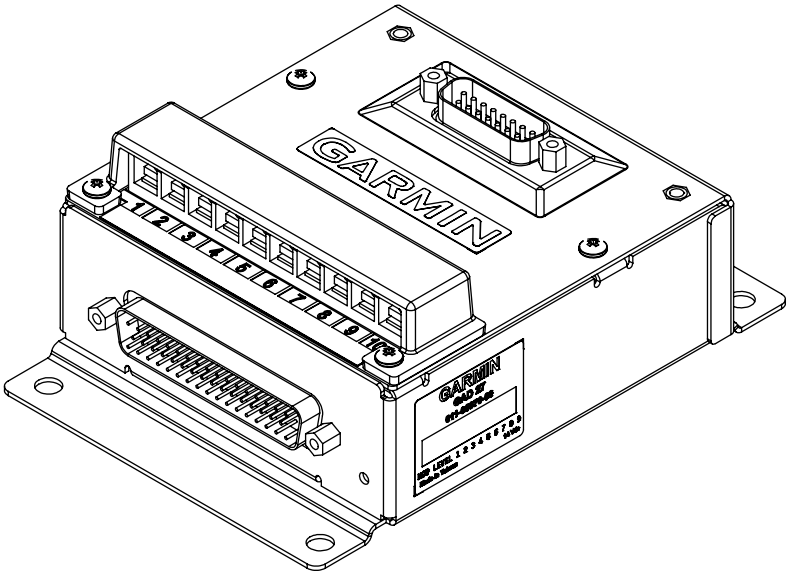

Figure 4-84 GAD 27 Unit View

4.4.11.1 Equipment Description

CAUTION

The GAD 27 is not intended for 28V installations.

The GAD 27 is a small, solid state integrated controller that provides a solution to typical airframe interfacing needs of AXIS flight display equipped aircraft. Configuration of the GAD 27 is completed through the PFD without requiring the use of a laptop or other external device. The following is a summary of the functionality provided by the GAD 27.

4.4.11.1.1 Flap Controller

The Flap Controller interfaces directly to the flap motor and uses flap position measured by the GEA™ 24 engine interface module from an external position sensor to support up to 8 pre-programmed flap settings. The GAD 27 can automatically move the flaps between pre-programmed positions in response to a momentary press of the flap control switch by the pilot. Each momentary press of the flap switch causes the flaps to move by one step in the specified direction, stopping at the next pre-programmed position.

For example, Up, Middle, and Down pre-programmed flap positions can be defined. By "bumping" the momentary flap switch downward, the GAD 27 will automatically move the flaps from the Up position to the Middle position in the downwind. Similarly, after turning final, the pilot can bump the switch downward again and the GAD 27 will automatically extend the flaps to the full down position. Since the GAD 27 receives airspeed from the AXIS flight display system, it can also prevent flap extension when the airspeed is above user-defined limits.

Optional flap limit switches can also be used with the GAD 27, which will cause the flap motor to stop upon reaching the extreme ends of its travel.

If the flap switch is held longer than 1 second, the flaps will run in the specified direction until the flap switch is released or the flap limit switch is triggered. This method of manually moving the flaps is not affected by user-defined airspeed limits. This behavior can also be used in conjunction with a non-momentary switch in order to fully retract the flaps with a single pilot action. Note that if any of the pre-programmed flap positions are negative (i.e. "reflexed") the flaps will still stop at the pre-programmed "zero" position during manual flap retraction.

Alternatively, an absolute flap position switch scheme is available. When this switching method is used, a three-position switch maps to several pre-determined switch positions, which the pilot can select from. Refer to section B.6 for more information on flap switch wiring.

4.4.11.1.2 Aircraft Trim

Aircraft Trim provides trim mixing of pilot and copilot trim switches output to each trim motor or autopilot servo, for each axis. Switches used on pilot/copilot control sticks do not supply trim motor power or control relays (just provide ground to discrete inputs) which improves switch reliability. No external relays are needed, the stick switches can be wired directly to the GAD 27.

4.4.11.1.3 Discrete Inputs

Provides nine additional user configurable discrete inputs (in addition to the four provided by the GEA 24).

4.4.11.1.4 Lighting Bus Outputs

Up to three external panel mounted potentiometers (dimmer controls) can be mapped to any of the six lighting bus outputs with configurable lighting curves to meet all the typical lighting bus needs of the aircraft. There are two types of lighting bus outputs:

- A voltage output which is used for lighting bus inputs on LRUs. This output cannot source current to drive lights.
- A PWM designed to dim LED or incandescent bulbs.

4.4.11.1.5 Light Control with Flashing

Controls up to two external lights using simple low power switches to ground discrete inputs. An alternating flash (wig-wag) function can either be switch activated or automatically turned on/off based on a user-selected airspeed.

4.4.11.1.6 Voltage Stabilizer

Provides a 12V power bus output to keep essential avionics online during engine start when battery voltage drops.

4.4.11.2 Required Equipment

Table 4-48 GAD 27 Part Numbers

Model	Assembly P/N	Unit Only P/N
GAD 27	010-01525-10 [1]	011-03876-10 [1]

[1] Part numbers 011-03876-00 and 011-03876-10 are functionally equivalent

The connector kit in table 4-49 is required to install the unit, and is not provided with the GAD 27 unit.

Table 4-49 Contents of GAD 27 Connector Kit (P/N 011-03877-00)

Item	Garmin P/N	Quantity
Backshell w/Hdw, jackscrew, 15/26 Pin	011-01855-01	1
Backshell w/Hdw, jackscrew, 50/78 Pin	011-01855-04	1
Terminal Block Label Flags	161-04025-00	1
Ring Terminal, Insulated, 14-16 AWG, #6	235-00094-00	12
D-Sub Connector Receptacle, Crimp Socket, 15 pin	330-00625-50	1
D-Sub Connector Receptacle, Crimp Socket, 50 pin	330-00625-50	1
Military Crimp Socket Contact, Size 20, 20-24 AWG	336-00022-02	70

4.4.11.3 Unit Installation

The GAD 27 is remotely mounted and is secured to the airframe using four screws supplied by the installer. Fabrication of a wiring harness is required. Sound mechanical and electrical methods and practices are recommended for installation of the GAD 27. Refer to section 4.1.2 for wiring considerations, and to section A.10 for pinouts.

1. Mount the unit to a suitable mounting location using (4) #10-32 pan or hex head screws.
2. Assemble the connector backshells and wiring harness.
3. Connect backshell connectors.
4. Screw down ring terminals to terminal block. The screws in the terminal block should be removed, the ring terminal inserted, and then the screw replaced.

4.4.11.4 General Specifications

Table 4-50 GAD 27 Power and Current

LRU	Supply Voltage	Current Draw
GAD 27	14 VDC	0.2 Amp (varies with connected devices)
	28 VDC	Not supported, do not use in 28V installations

Table 4-51 GAD 27 Dimensions and Weights

LRU	Width	Height	Depth	Unit Weight	Unit & Connector
GAD 27 (Flaps/Lights/Trim Controller)	3.78 inches [96.01 mm]	1.954 inches [49.63 mm] no connector 3.569 inches [90.65 mm] with connector	5.204 inches [132.18 mm] no connector 6.533 inches [165.93 mm] with connector	0.64 lbs (0.29 kg)	0.97 lbs (0.44 kg)

4.4.11.5 Outline and Installation Drawings

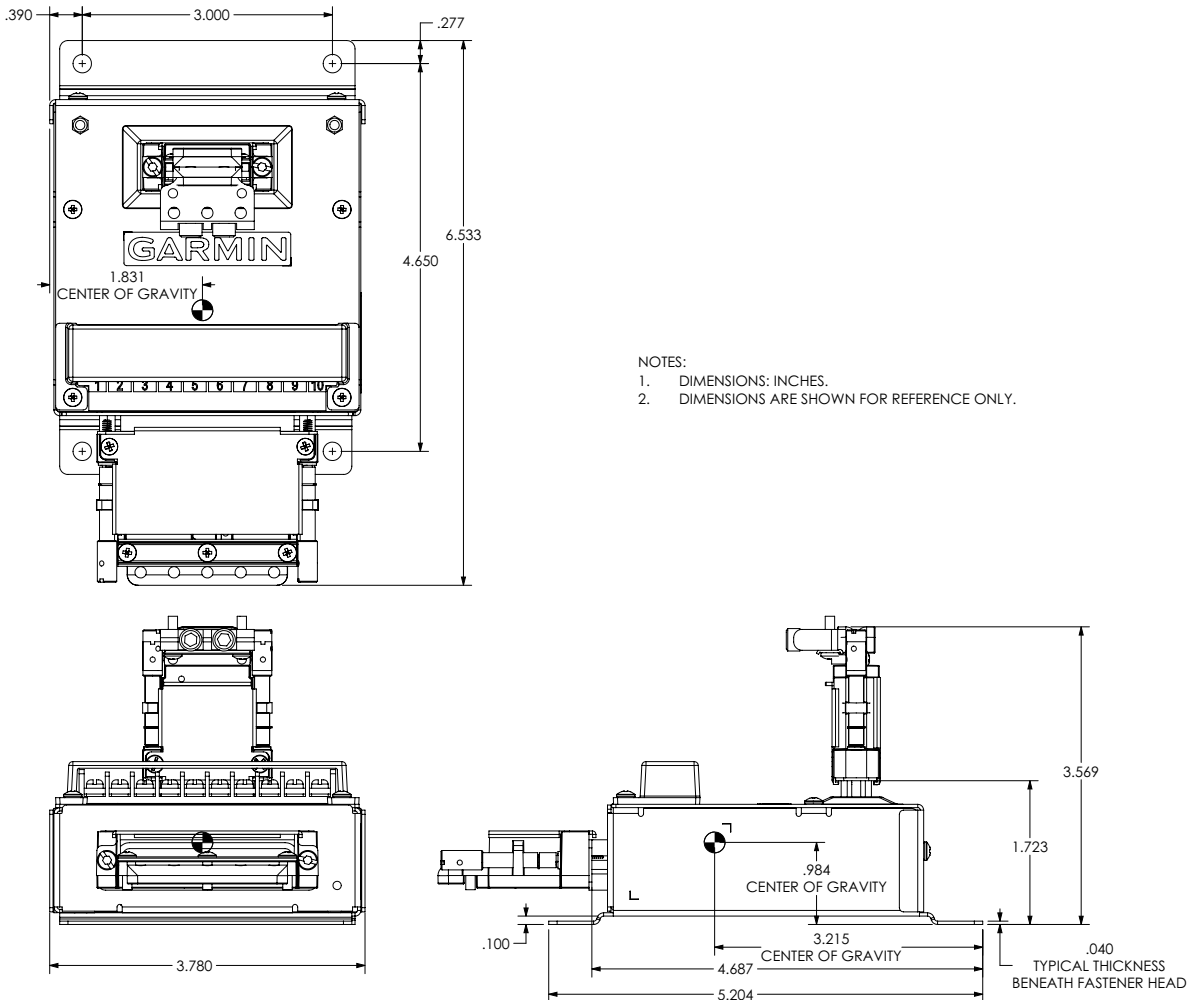

Figure 4-85 GAD 27 Outline Drawing

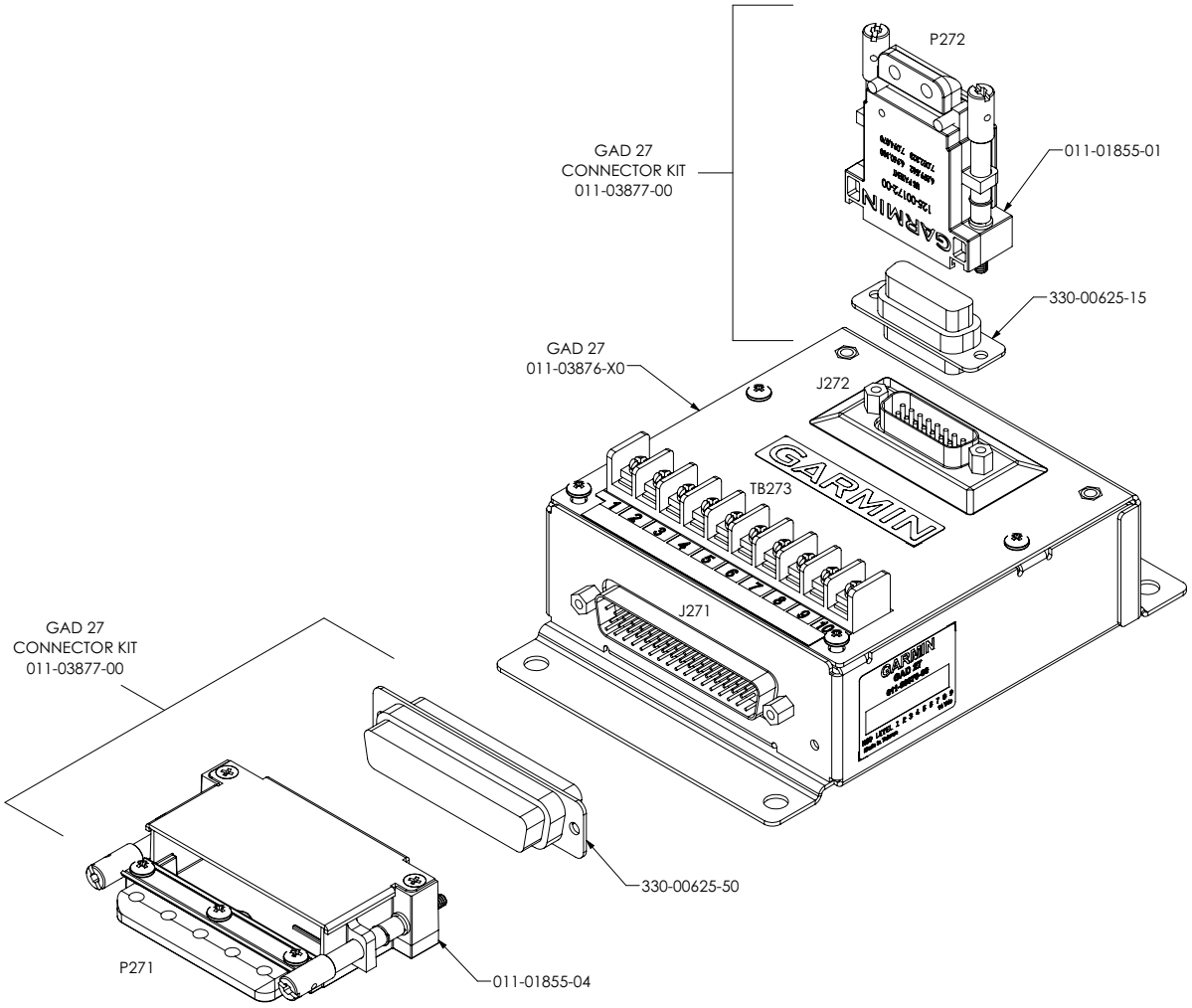

Figure 4-86 GAD 27 Installation Drawing

4.4.12 GAD 29B/C/D ARINC 429 Data Link Installation

This section contains general information as well as installation information for the GAD 29. Use this section to mount the GAD 29 unit.

NOTE

A GAD 29 cannot be installed in a system that also includes a GSU 73. For ARINC 429 I/O, use the appropriate pins on the GSU 73 instead.

NOTE

All information for the GAD 29 is applicable to the GAD 29B/29C/29D unless explicitly noted.

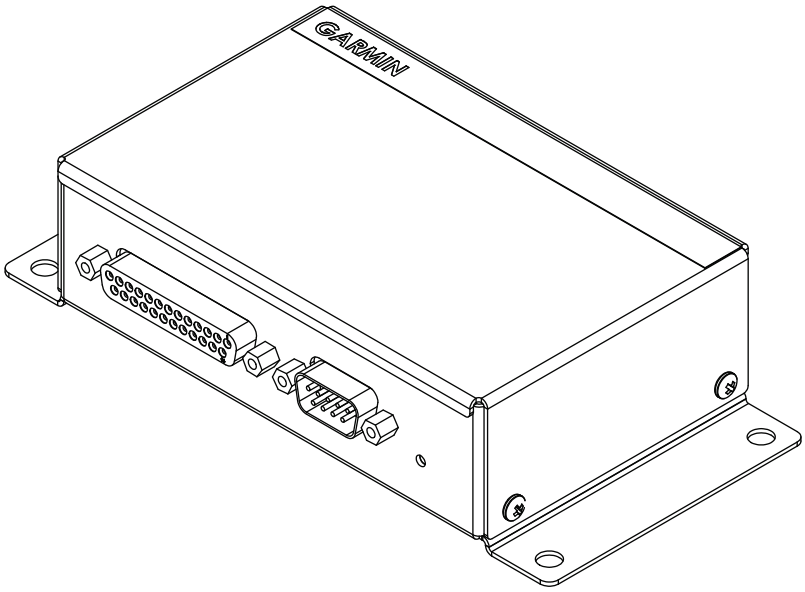

Figure 4-87 GAD 29 Unit View

4.4.12.1 Equipment Description

The GAD 29 provides an ARINC 429 I/O interface, which populates ARINC 429 data from external navigators and other sources, on the CAN bus. This allows for multiple displays on a CAN bus to receive this data. This unit is most commonly used to allow the AXIS flight display to interface to IFR navigators such as the GNC radio, GNS Series Navigators, and GTN Series navigators, among others. The GAD 29 has a 25-pin D-sub connector and a 9-pin D-sub connector. These connectors will provide the following functionality:

- Two low speed ARINC 429 transmitters
- Four low speed ARINC 429 receivers
- One CAN network port
- *Analog outputs
- *Excitation pass-through

*GAD29B/D only

4.4.12.2 Required Equipment

Table 4-52 GAD 29 Part Numbers

Model	Assembly P/N	Unit Only P/N
GAD 29	010-01172-00	011-03236-00
GAD 29B	010-01172-10	011-03236-10
GAD 29C	010-01172-20	011-03236-20
GAD 29D	010-01172-21	011-03236-21

The connector kit in table 4-16 is required to install the unit, it is not provided with the GAD 29 unit.

Table 4-53 Contents of GAD 29 Connector Kit (P/N 011-03271-00)

Item	Garmin P/N	Quantity
Backshell w/Hdw, jackscrew, 9-pin	011-01855-00	1
Backshell w/Hdw, jackscrew, 25-pin	011-01855-02	1
Conn, Plug,D-Sub, Crimp Pin, Commercial, 25 CKT	330-00624-25	1
Conn, Rcpt, D-Sub, Crimp Socket, Commercial, 09 CKT	330-00625-09	1
Contact, Socket, Military Crimp, Size 20	336-00022-02	11
Contact, Pin, Military Crimp, Size 20	336-00024-00	27

4.4.12.3 Unit Installation

Fabrication of a wiring harness is required. Sound mechanical and electrical methods and practices are recommended for installation of the GAD 29. Refer to section 4.1.2 for wiring considerations, and to section A.11 for pinouts.

1. Mount the unit to a suitable mounting location using (4) #10-32 pan or hex head screws.
2. Assemble the connector backshells and wiring harness.
3. Connect CAN terminator to unit if required (section 3.2.2).
4. Connect backshell connectors.

4.4.12.4 General Specifications

Table 4-54 GAD 29 Power and Current

LRU	Supply Voltage	Current Draw
GAD 29	14 VDC	0.2 Amp
	28 VDC	0.1 Amp

Table 4-55 GAD 29 Dimensions and Weights

LRU	Width	Height	Depth	Unit Weight	Weight of Unit and Connector(s)
GAD 29 (ARINC 429 Adapter)	6.10 inches [154.9 mm]	1.48 inches [37.6 mm]	3.23 inches [82.0 mm] no connector 5.10 inches [129.4 mm] w/connector 5.54 inches 140.7 mm] w/connector and CAN terminator	GAD 29 0.38 lbs (0.172 kg)	GAD 29 0.63 lbs (0.285 kg)

4.4.12.5 Outline and Installation Drawings

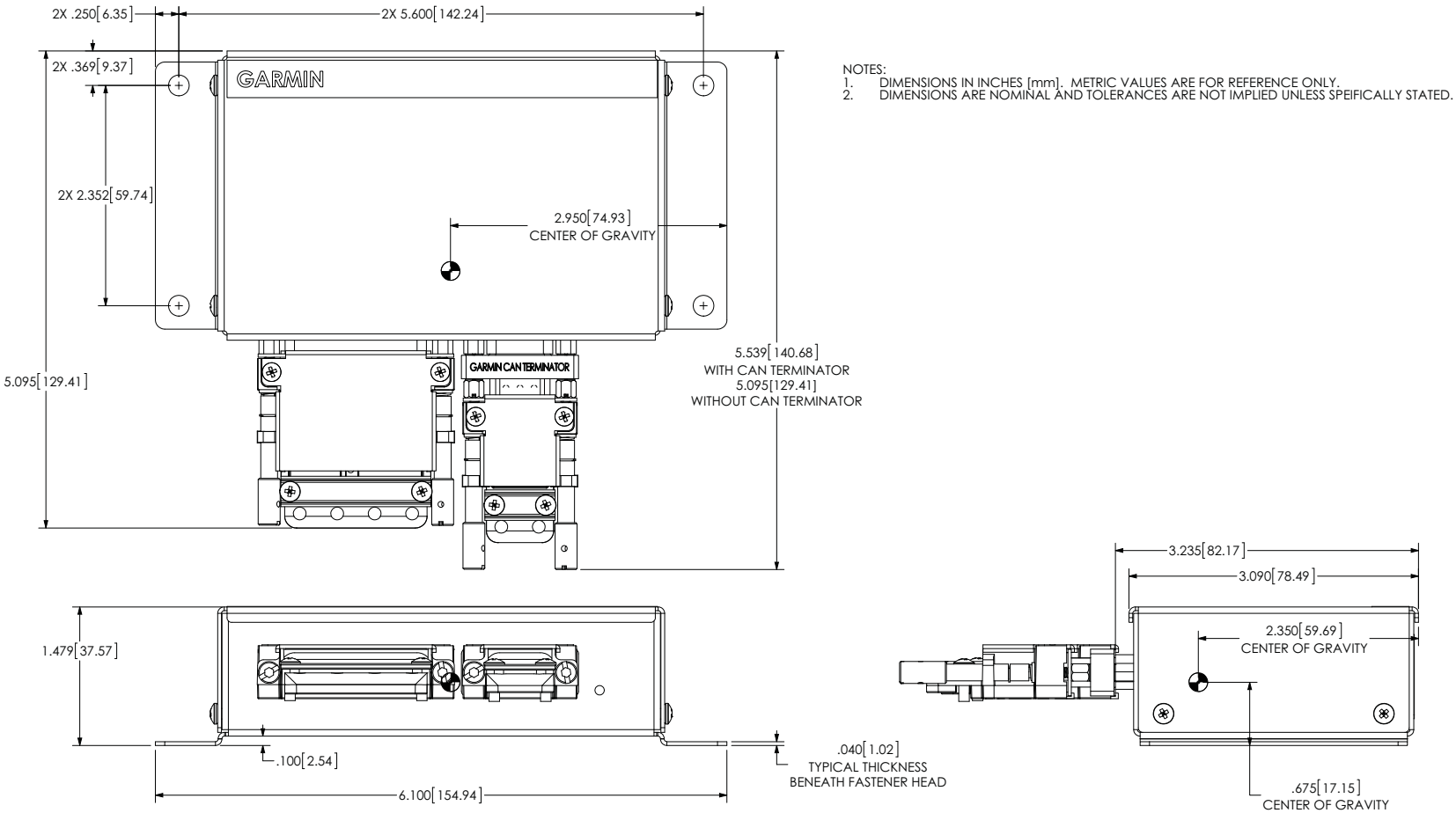

Figure 4-88 GAD 29 Outline Drawing

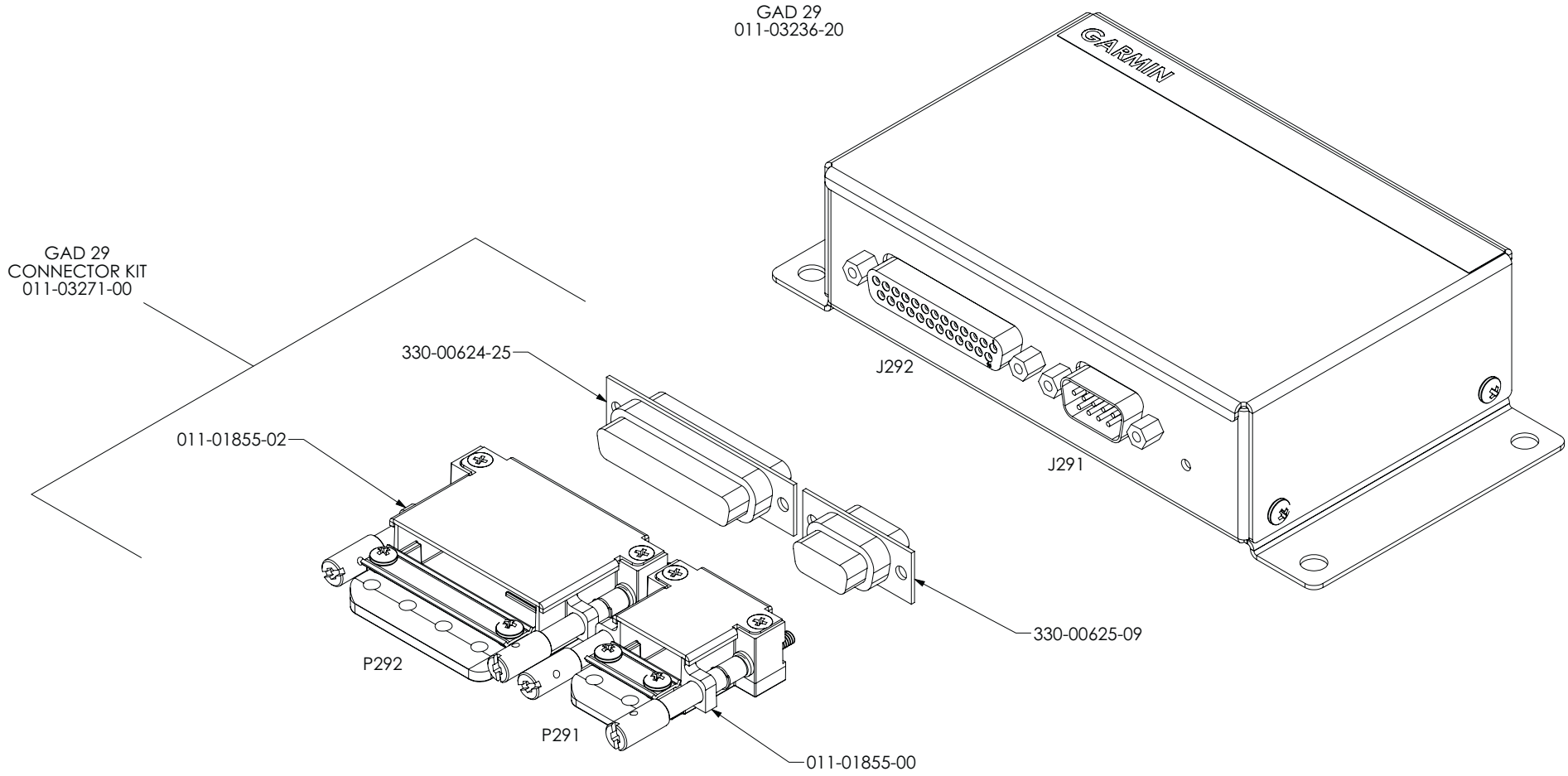

Figure 4-89 GAD 29 Installation Drawing without CAN Bus Terminator

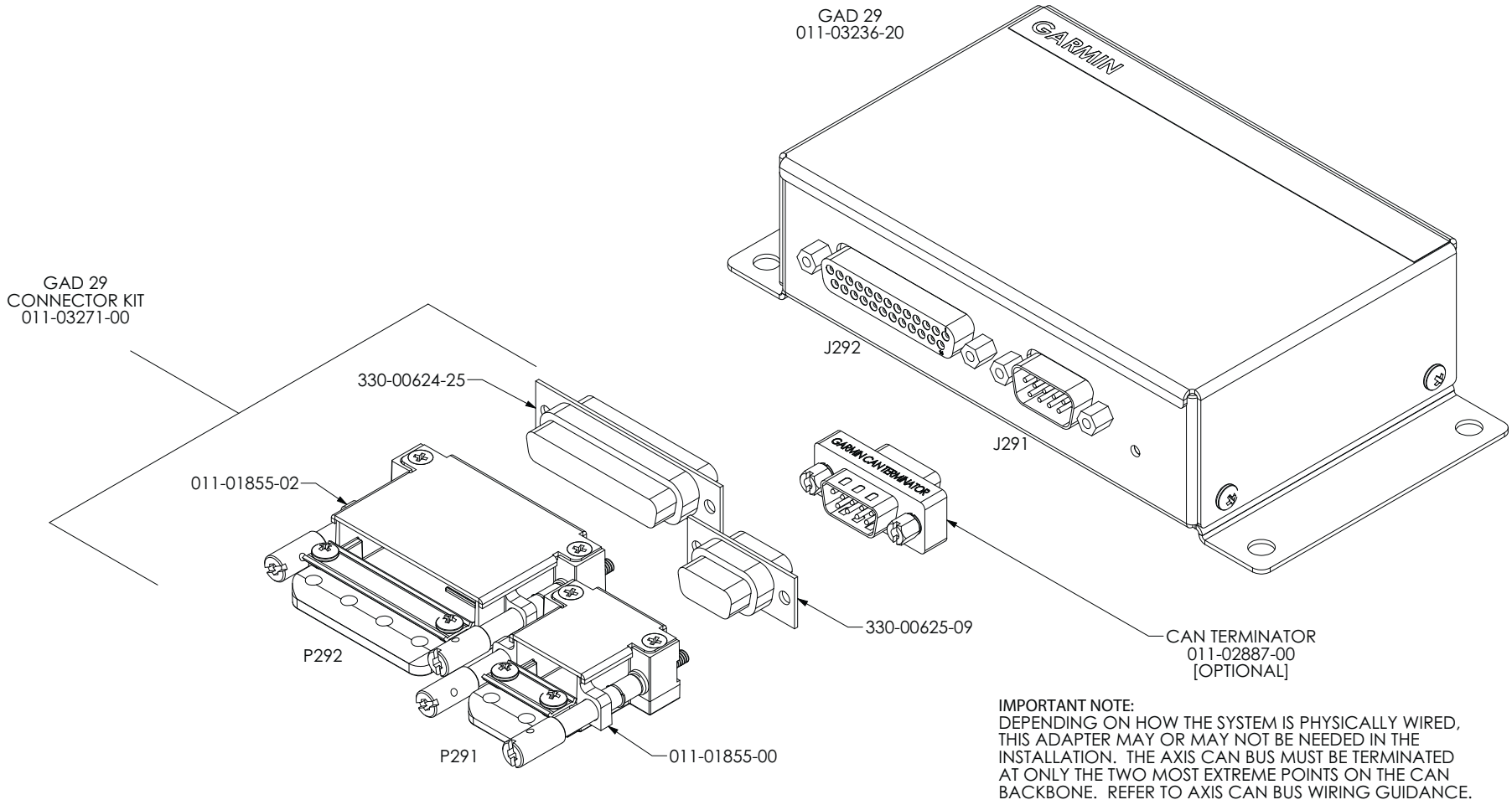

Figure 4-90 GAD 29 Installation Drawing with CAN Bus Terminator

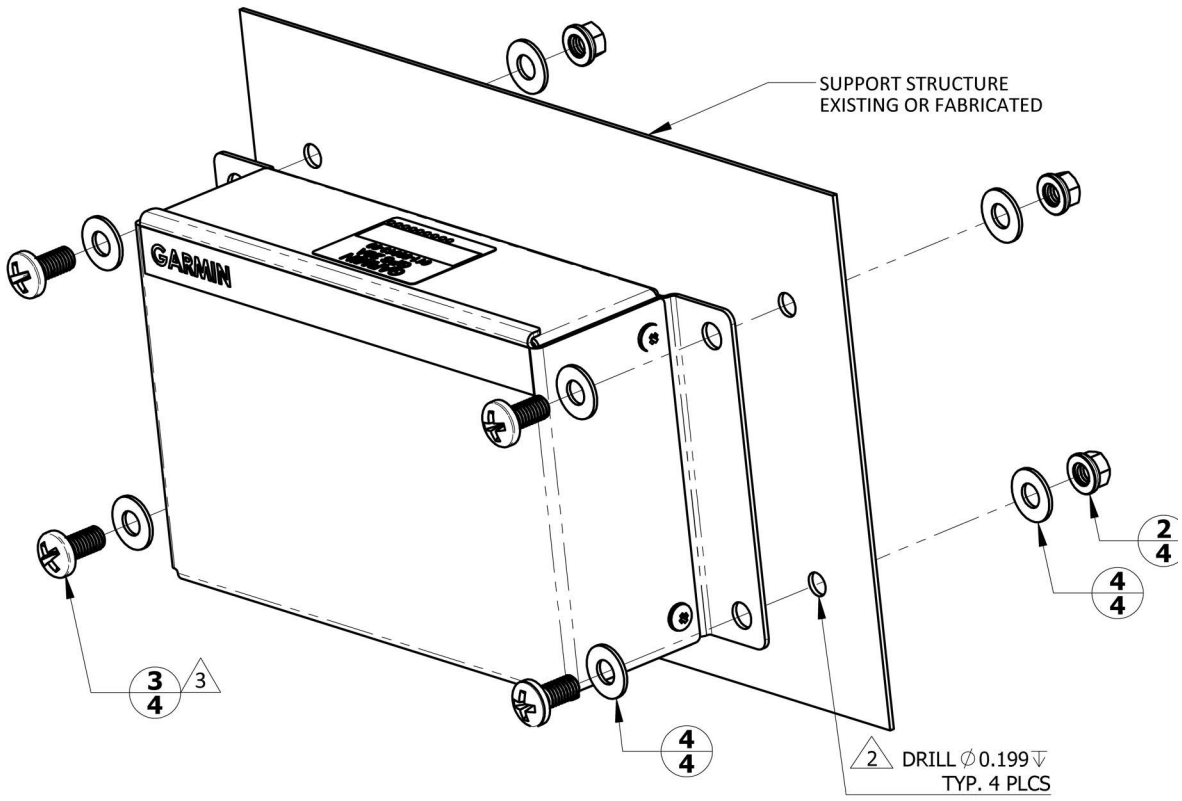

ITEM	DESCRIPTION	P/N	QTY
1	GAD 29D ADAPTER	011-03236-21	1
2	NUT, SELF-LOCKING, REDUCED HEXAGON, REDUCED HEIGHT, RING BASE .1900-32UNJF-3B	MS21042L3	4
3	SCREW, MACHINE, PAN HEAD, STRUCTURAL, CROSS RECESSED .1900-32 UNF-3A, 0.406 IN	MS27039-1-06	4
4	WASHER, FLAT, STEEL CAD PLATED, 0.203 ID, 0.438 OD, 0.032 INCH THICK	NAS1149F0332P	8

NOTES

1 DIMENSIONS ARE IN INCHES UNLESS OTHERWISE SPECIFIED.

2 FASTENER HOLES ARE LOCATED TO MATCH GAD 29 UNIT.

3 TORQUE .1900-32 UNF SCREWS TO 12-15 IN-LBS.

4 MILITARY SPECIFICATION OR NATIONAL AEROSPACE STANDARD SELF LOCKING NUTPLATES CAN BE USE IN PLACE OF SELF LOCKING NUTS. RIVETS ARE INSTALLED PER MIL-R-47196 (NASM47196) RIVET, BUCK TYPE, PREPARATION FOR AND INSTALLATION, OR PER MIL-STD-403 *PREPARATION FOR AND INSTALLATION OF RIVETS AND SCREWS, ROCKET MISSILE, AND AIRFRAME STRUCTURES.*

Figure 4-91 GAD 29 Installation

4.4.13 GAP 26 Pitot Tube Installation

This section contains information for the GAP 26 Pitot/AOA (Angle of Attack) probe. Use this section to install the GAP 26.

4.4.13.1 Equipment Description

The function of the GAP 26 is to provide Pitot and AOA pressures to the GSU 25 for the purpose of displaying airspeed and AOA to the pilot as part of the AXIS flight display system. The GAP 26 does not provide a static pressure source to the GSU 25. There are three different versions of the GAP 26, the -00 (unheated), the -10 (heated, for ice protection), and the -20 (heated, with ice protection and regulated temperature limit). All versions of the GAP 26 have identical aerodynamic performance including identical internal water separation/baffling chambers, drain holes, pressure port locations and pneumatic tubing. The -20 version of the GAP 26 includes a heater control box, that is mounted separately from the probe (section 4.4.13.5).

NOTE

Both Pitot and AOA pressure chambers have internal baffling and dedicated drain holes to provide moisture protection.

The heated version of the GAP 26 (P/N 010-01074-10) has dual internal electro-thermal heating elements to provide ice protection to the areas of the probe where surface impingement of icing elements is expected to occur. In addition to the same level of ice protection (as the -10 probe), the heated/regulated version of the GAP 26 (P/N 010-01074-20) limits the maximum tip temperature to make the probe safer if powered on the ground and to provide a discrete output that indicates when the heater is powered and providing sufficient heat.

The pneumatic tubing for Pitot pressure is the longer of the two tubes extending out of the probe.

Figure 4-92 GAP 26 Unit View (-10 Version Shown)

CAUTION

If the system experiences inconsistent performance or an inability to calibrate the AOA System, leak testing may be performed to provide assurance that any leakage is within an acceptable range. Refer to appendix J for more information.

CAUTION

Garmin recommends that a leak test be performed (appendix J) following any maintenance action in which the Pitot or AOA pneumatic lines are opened up (i.e., whenever the GAP 26 is removed or replaced).

4.4.13.2 Equipment Available

Table 4-56 GAP 26 Part Numbers

Model	Assembly P/N	Unit Only P/N	Heater Control Box P/N
GAP 26 Adjustable Mount	010-01380-00	011-03609-00	N/A
GAP 26 Probe Only	010-01074-00	011-02964-00	N/A
GAP 26 Probe Only, Heated	010-01074-10	011-02964-10	N/A
GAP 26 Probe Only, Heated, Regulated	010-01074-20	011-02964-20	011-02965-00

The connector kit in table 4-57 can be used to install the unit, it is not provided with the GAP 26 unit.

Table 4-57 Contents of GAP 26 Adjustable Mounting Kit (P/N 011-03609-00)

Item	Garmin P/N	Quantity
GAP 26 Adjustable Mount, Washer Plate	115-02075-00	1
GAP 26 Adjustable Mount, Tube Bracket	117-00659-00	1
GAP 26 AN5812 Mount Tube, Aluminum	117-02013-00	1

4.4.13.3 Additional Equipment

- Electrical and pneumatic connectors per installer preference
- Mount: Standard AN5812 Pitot tube mount
- #6-32 screws (4 pcs), required length (.218" min - .312" max), recommend screws with nylon patch on threads for thread locking for mounting probe
- #4 or #6 (4 pcs) pan or hex head screws for mounting heater control box

4.4.13.4 GAP 26 Unit Installation

Use this section for guidance in planning and installing the GAP 26 Probe installation.

4.4.13.4.1 GAP 26 Mounting Location

NOTE

For heated probe installations where the installer desires to shorten the provided aluminum tubing, a minimum of 8 inches of aluminum tubing should remain between the probe and any transition to non-metallic tubing to protect the non-metallic tubing from excessive heat.

The GAP 26 is an under-wing mounted AOA probe. This section outlines the acceptable locations for the GAP 26 on the aircraft.

For proper functionality, the GAP 26 should be mounted in a location where airflow over the probe is relatively undisturbed (typically mid-wing span). If the aircraft is equipped with a magnetometer in a wing, it is recommended that the GAP 26 be installed in the opposite wing. The high current carrying conductors for the heated probe can interfere with the GMU magnetometer unit.

The GAP 26 probe is intended to be installed in an existing non-structural inspection panel under the aircraft wing. The attachment location must be sufficiently rigid to provide adequate support for the loads that the GAP 26 may experience.

- The GAP 26 is an under-wing mounted Pitot/AOA probe, it is not intended for fuselage mount applications. For proper functionality, the GAP 26 should be mounted in a location where airflow over the probe is relatively undisturbed (typically mid-wing span).
- The tip of the GAP 26 should be located at least 4” from, but not more than 10” below the bottom surface of the wing. The probe tip may protrude up to 2” max in front of the leading edge of the wing.
- Viewed from the side, the GAP 26 probe bayonet centerline should be mounted within ±5° from parallel to the wing chord line.
- Viewed from the top, the GAP 26 bayonet centerline should be mounted within ±5° from parallel with the aircraft centerline.
- Consider using the aircraft designer/manufacturer’s recommended mounting location (if specified). Optimal AOA functionality results when the tip of the GAP 26 probe is located no further back than 25% of the wing chord length from the leading edge. (Refer to figure 4-93)
- The 3/16” diameter aluminum pneumatic tubing is intended to be hand bendable to suit various mounting configurations. Minimum allowable bend radius is 1.5”. It is recommended to bend any given section only once to prevent work hardening and cracking of the aluminum tubing.
- Garmin recommends the GAP 26 not be used on aircraft where the ship static pressure port is located under the wing (due to the likelihood the AOA measurement will be significantly impacted). If the static port is located under the wing, it is recommended the port be moved to an alternate location as part of the GAP 26 installation. If port relocation is required, obtain guidance from the aircraft designer regarding acceptable alternate static port locations.
- Route all GAP 26 power and ground wires away from any audio wires.
- To avoid magnetic interference, do not use the airframe to ground the GAP 26 or any other high-current device.

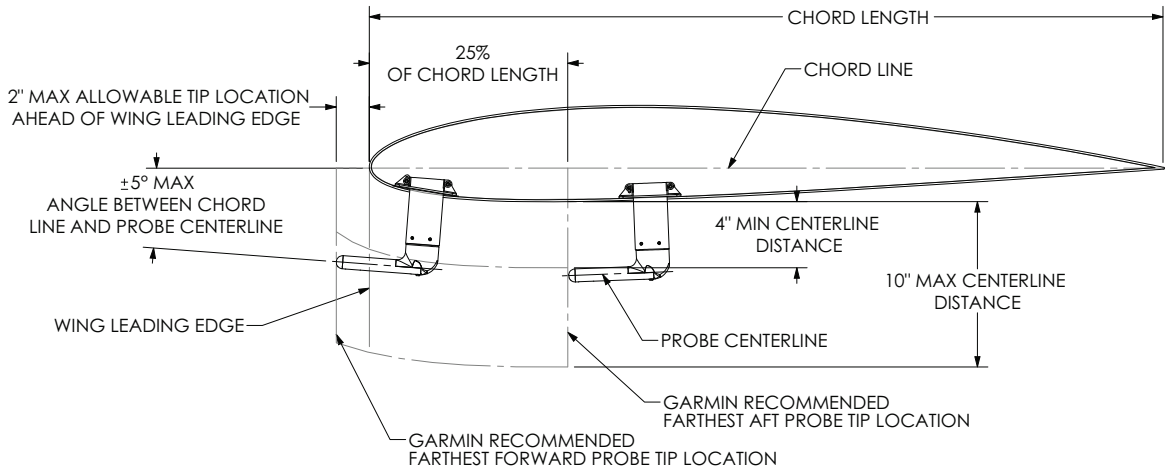

Figure 4-93 GAP 26 Mounting Location Guidance

4.4.13.4.2 GAP 26 Mounting Requirements

The inspection panel must be at least 0.063 inches thick aluminum. If the existing inspection panel does not meet this requirement, a new inspection panel must be fabricated.

- The GAP 26 Pitot/AOA probe is intended to be installed in the same location as an existing non-structural inspection panel on the aircraft wing. A replacement mounting plate that meets the minimum requirements listed in this section may be fabricated to replace the existing inspection panel or the existing inspection panel may be used with an added doubler plate (if needed) to meet the minimum strength requirements listed below. If it is desired to use a structural panel to mount the GAP 26, or to create a new mounting location by making a hole in the aircraft skin, a structural analysis will be required to evaluate the affects of the installation on existing structure and the installation will no longer be considered a minor alteration.

NOTE

The inspection panel must be at least 0.063 inches thick aluminum. If the existing inspection panel does not meet this requirement, a new inspection panel must be fabricated.

- The minimum thickness of the replacement mounting plate or inspection panel shall be .063”. If the existing inspection panel is to be used, and it does not meet this minimum thickness requirement, then a doubler plate shall be added between the inspection panel and the GAP 26 adjustable mount so the combined thickness meets or exceeds the minimum thickness requirement.
- If a doubler plate is required for the installation, refer to AC 43.13-1B, Chapter 4 for appropriate fabrication and riveting methods. The doubler plate perimeter should be no further than 1.5" from the centerline of the inspection panel mounting screws (refer to figure 4-95).
- A sheet metal template for the cutout and mounting holes has been included. Using this template will provide required clearance to make the five degree adjustment after installation if needed. To make the five degree pitch down adjustment, remove the leading edge mounting bolt where the AN5812 Mast connects to the mounting bracket (refer to figure 4-94). Loosen the aft side mounting bolt and turn the mast downward until the leading edge mounting hole aligns with the offset hole provided on the mounting bracket. Install the leading edge mounting bolt with the mast in this position and tighten the aft side bolt.
- The maximum hole spacing for the mounting plate screws shall be 2-3". If the existing inspection panel hole spacing is greater, a nut plate and screws (to match existing) shall be added to accommodate this maximum spacing requirement.
- Screws of appropriate length for the specific installation shall be used to fasten the GAP 26 adjustable mount to the inspection panel (or combination panel and doubler). Required screw size is #8-32. Screws shall meet MS24693 or equivalent. Locking nuts shall meet MS21044 or equivalent. Washers shall meet NAS 1149 or equivalent.
- The GAP 26 is intended to be mounted in the supplied adjustable mount. If other mounting methods are to be used the installer must follow installation guidance in AC 43.13-2B Chapters 1 and 3. In addition, the installer must show the installation is adequate for expected loading and does not affect the surrounding structure of the aircraft.
- The GAP 26 probe and mount shall be installed as shown in figure 4-94.

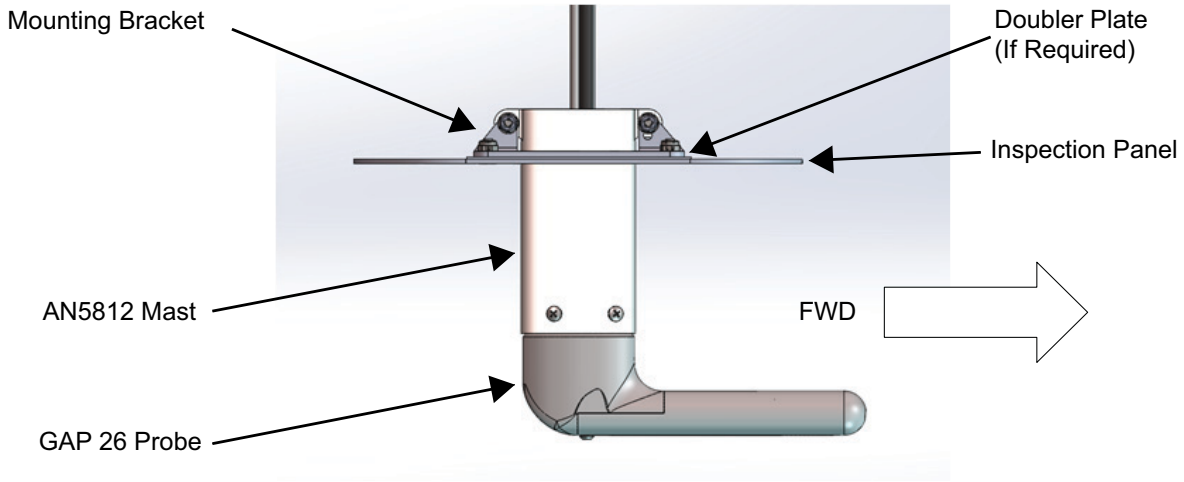

Figure 4-94 GAP 26 Probe and Mount (Side View)

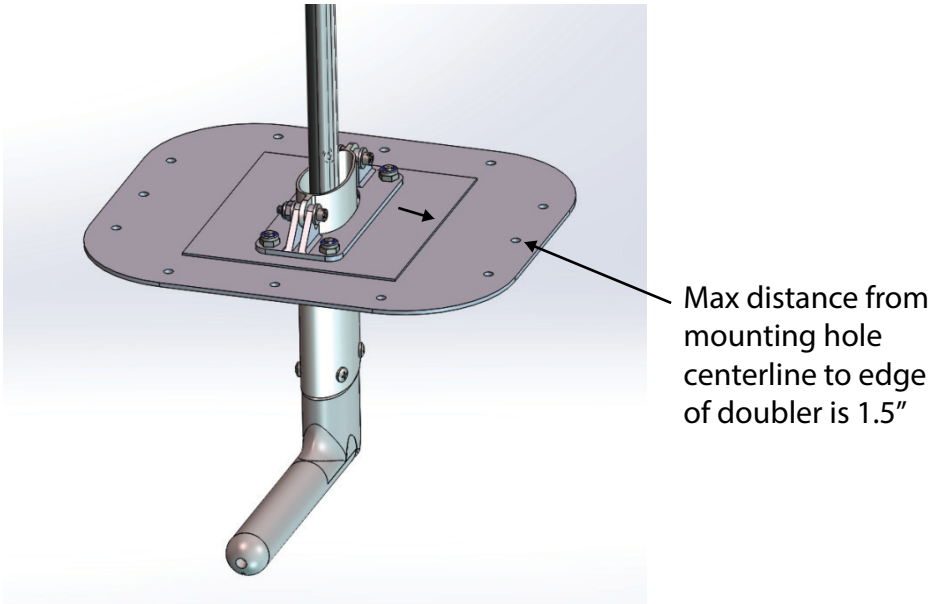

Figure 4-95 GAP 26 Shown with Inspection Panel and Doubler Plate

4.4.13.4.3 GAP 26 Unit Assembly

The GAP 26 probe assembly (P/N 011-02964-70) must be assembled to the inspection panel using a mount tube (P/N 117-00658-10) and an adjustable bracket (P/N 117-00659-10) with installer supplied hardware shown in table 4-56. Refer to figure 4-96 for assembly guidance.

If countersunk screws are used, the hardware must be oriented with the head of the screw on the inspection panel and the washer and nut on the mounting bracket.

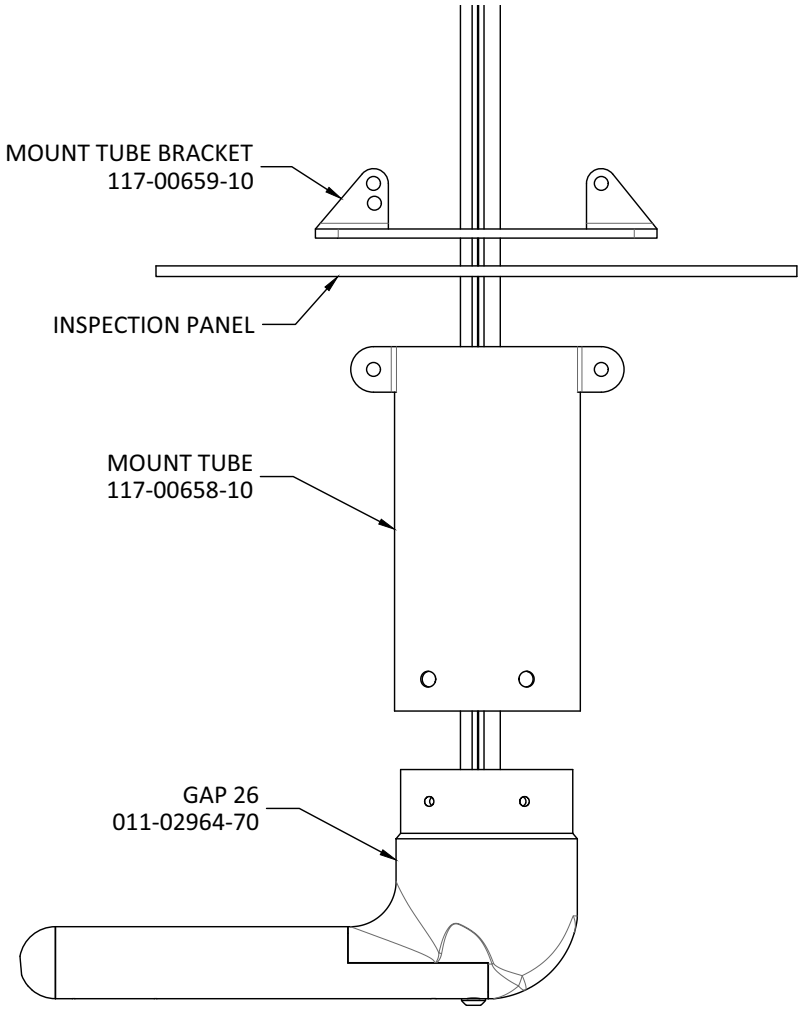

Figure 4-96 GAP 26 Installation Components

NOTE

GAP 26 installation hardware is not provided with the probe and must be supplied by the installer.

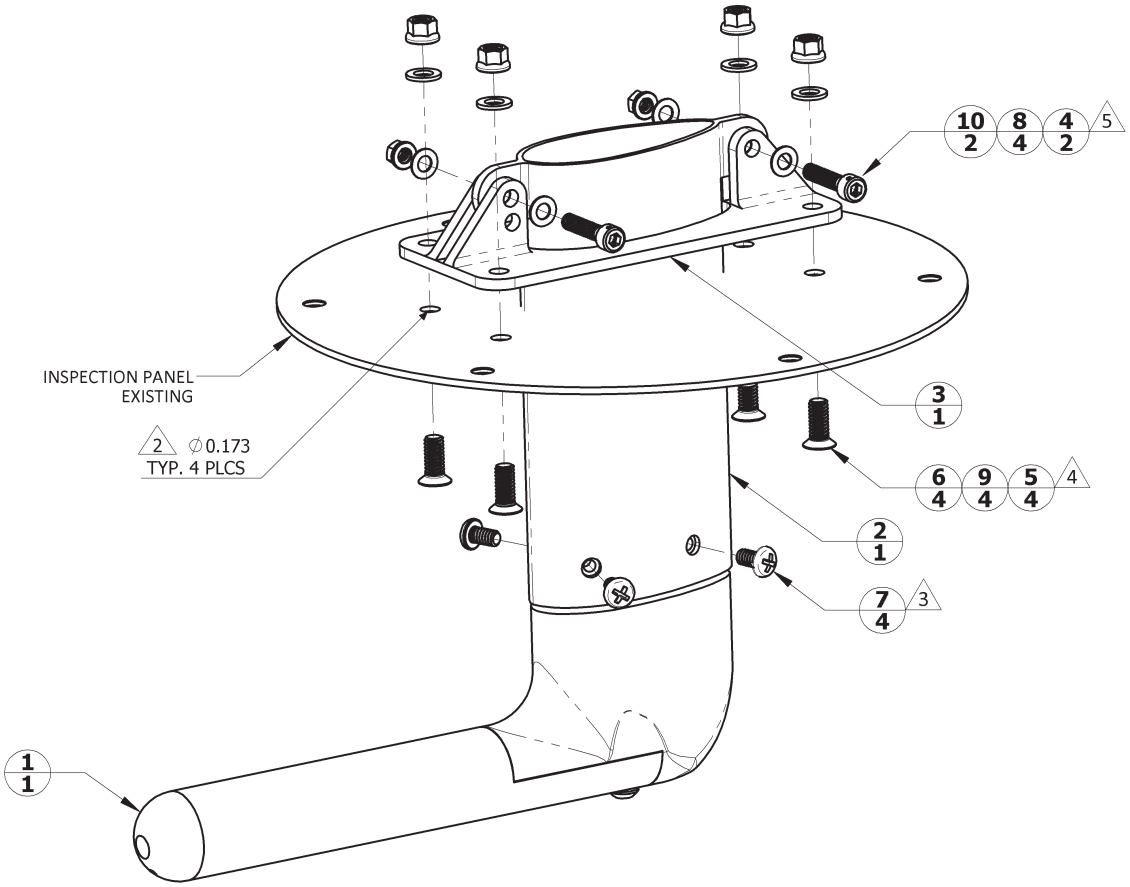

ITEM	DESCRIPTION	P/N	QTY
1	GAP 26 ANGLE OF ATTACK PROBE, 28VDC SELF-REGULATING	011-02964-60	1
2	MOUNT TUBE WITH EARS, GAP 26 AOA PROBE	117-00658-00	1
3	BRACKET, MOUNT TUBE, ADJUSTABLE, GAP 26 AOA PROBE	117-00659-00	1
4	NUT, SELF-LOCKING, REDUCED HEXAGON, REDUCED HEIGHT, RING BASE, 0.1380-32UNJC-3B	MS21042L06	2
5	NUT, SELF-LOCKING, REDUCED HEXAGON, REDUCED HEIGHT, RING BASE, 0.1640-32UNJC-3B	MS21042L08	4
6	SCREW, 100 DEG, FLAT HEAD, 0.1640-32UNJC-3A, 13/32 IN LONG	NAS517-2-0	4
7	SCREW, MACHINE, AIRCRAFT PAN HEAD, CRUCIFORM RECESS, 0.1380-32 UNC-2A, 4/16 IN LONG	NAS601-4P	4
8	WASHER, FLAT, STEEL, CAD PLATED, 0.016 INCH THICK, ID 0.143, OD 0.267	NAS620-6L	4
9	WASHER, FLAT, STEEL, CAD PLATED, 0.032 INCH THICK, ID 0.169, OD 0.304	NAS620-8	4
10	SCREW, CAP, SOCKET HEAD, 0.1380-32 UNC, 10/16-IN LONG, DRILLED HEAD	NAS1352-06H10	2

NOTES

1 DIMENSIONS ARE IN INCHES UNLESS OTHERWISE SPECIFIED.

2 FASTENER HOLES ARE LOCATED TO MATCH BRACKET, ITEM 3.

Figure 4-97 GAP 26 Installation
Sheet 1 of 2

NOTES CONTINUED

3. APPLY MIL-S-46163 TYPE II, GRADE N MEDIUM STRENGTH THREADLOCKER AND TORQUE .1380-32 UNC SCREWS 7.0 TO 9.0 IN-LB.

4. TORQUE .1640-32 UNC SCREWS 12.0 TO 15.0 IN-LB. FASTENER LENGTH MAY VARY TO MATCH THICKNESS OF THE INSPECTION PANEL.

5. SAFETY WIRE SCREW HEADS IN PAIRS PER MS33540 (NASM 33540) *SAFETY WIRING AND COTTER PINNING*.

Figure 4-97 GAP 26 Installation
Sheet 2 of 2

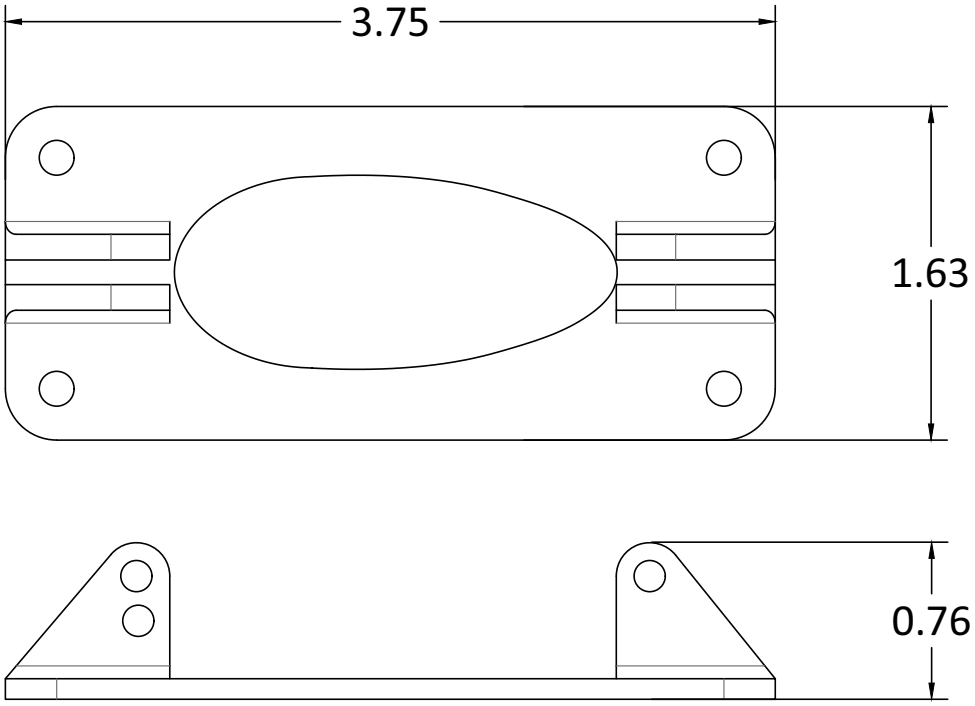

Figure 4-98 GAP 26 Mount Tube Bracket Dimensions

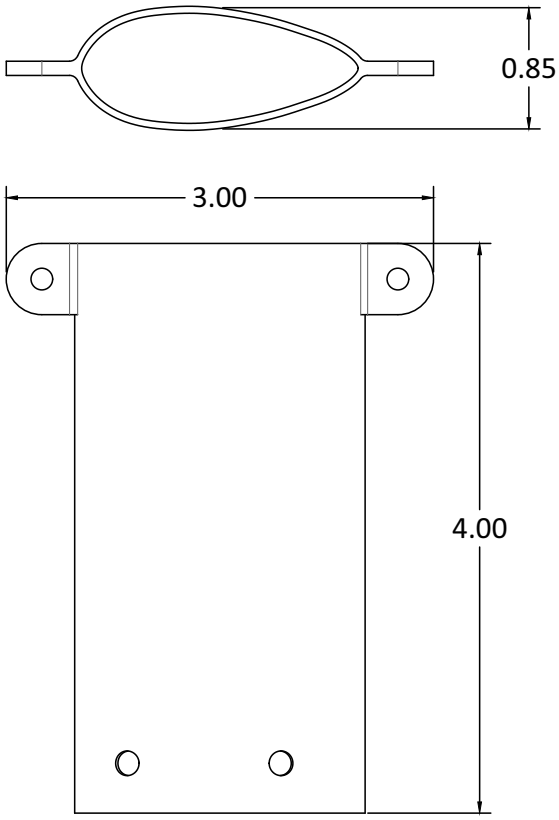

Figure 4-99 GAP 26 Mount Tube Dimensions

4.4.13.4.4 GAP 26 Alignment

Final assembly of the probe must satisfy the following requirements:

- Probe bayonet centerline should be vertically aligned within +10°/-5° from parallel to existing Pitot tube. Refer to figure 4-100.
- Probe bayonet centerline should be horizontally aligned within ±5° from parallel of fuselage centerline. Refer to figure 4-101.

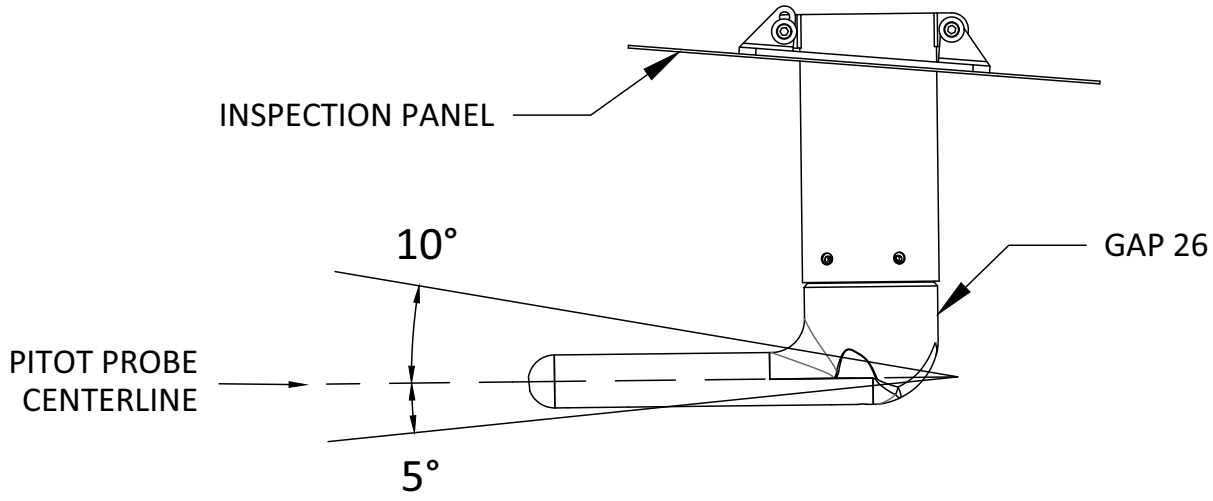

Figure 4-100 GAP 26 Alignment (Side View)

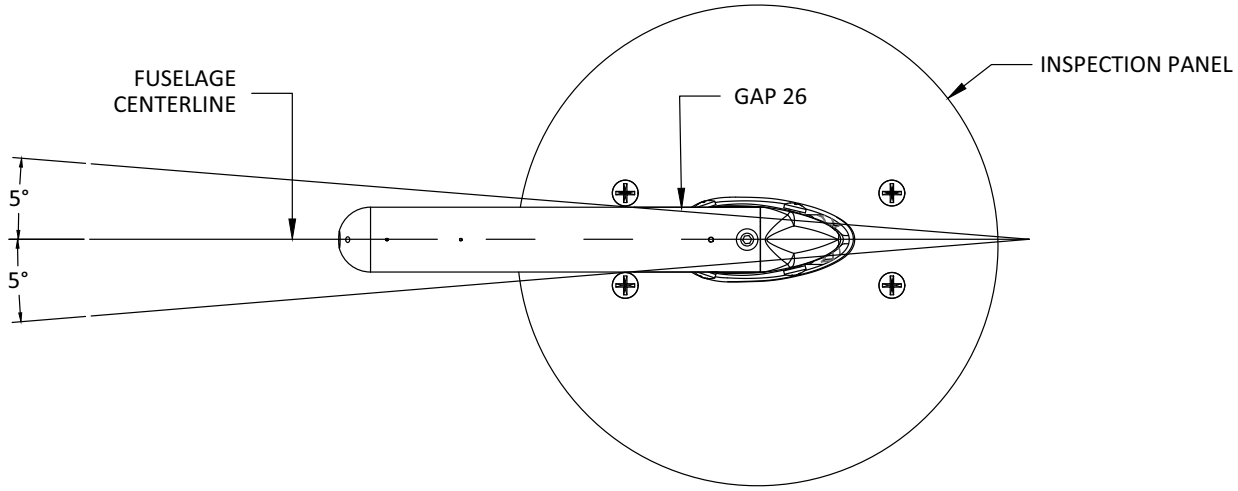

Figure 4-101 GAP 26 Alignment (Bottom View)

For installations where the vertical alignment has an initial angle greater than 5° from the existing Pitot tube, the lower hole in the adjustable bracket can be used to decrease the angle by 5°.

To make the 5° pitch down adjustment, remove the leading edge mounting bolt where the mount tube connects to the mounting bracket. Loosen the aft side mounting bolt and rotate the mast downward until the leading edge mount tube hole aligns with the offset hole on the bracket. Install the leading edge mounting bolt in this position and tighten the aft bolt. Refer to figure 4-100.

After the desired angle is set, the gap between the inspection panel and mounting tube must be filled with RTV silicone adhesive sealant.

4.4.13.4.5 GAP 26 Pneumatic Connections

The 3/16-inch diameter aluminum pneumatic tubing is intended to be easily bendable to suit various mounting configurations.

- The longer of the two tubes extending out of the probe is the Pitot pressure tube (not used), while the shorter tube is for AOA pressure. Refer to figure 4-102.
- The end of the AOA tube must be flared in accordance with Mil-F-18866. The following components must be used to create a male connection to join to the 3/16-inch aluminum AOA tubing to the plastic hose that connects to the GSU 25. Refer to section 4.4.4.5 for guidance in connecting to the GSU 25.
  - AN818-3D or AN818-3W nut
  - MS20819-3D (or AN819-3D) sleeve
  - AN816-3D adapter
- Minimum allowable bend radius is 1.5 inches. It is recommended to bend any given section only once to prevent work hardening and cracking of the aluminum tubing.
- The aluminum tubing may be cut to a custom length as long as a minimum length of 8 inches remains. If the tubing is modified, care should be taken to ensure there are no burs that might affect the pneumatic seal of the pressure fittings used.
- The end of the Pitot tube must be flared in accordance with Mil-F-18866. The following components must be used to cap the tube:
  - AN818-3D or AN818-3W nut
  - MS20819-3D (or AN819-3D) sleeve
  - AN806-D3 plug

Reference the aircraft manufacturer standard practices manual or equipment manufacturer documentation for guidance. Methods, techniques, and practices defined in AC 43.13-1B chapter 12, section 4 *Pitot/Static Systems* are acceptable.

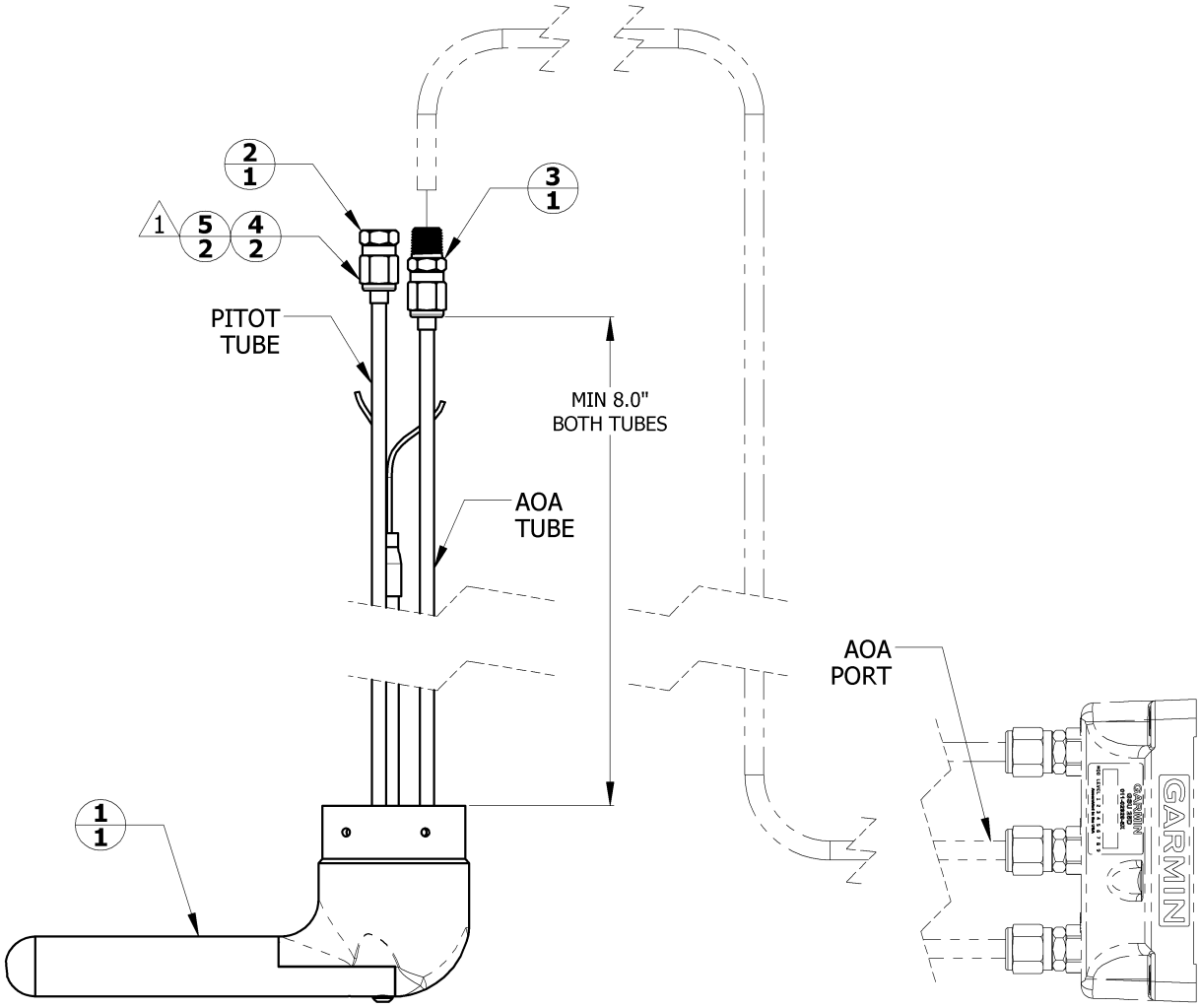

2	5	MS20819-3D	SLEEVE, .1875 TUBING, ALUM.
2	4	AN818-3D	NUT, TUBE COUPLING, SHORT, Ø0.1875 TUBE OD, .3750-24 UNJF-3B, ALUM.
1	3	AN816-3D	ADAPTER, STRAIGHT, PIPE TO TUBE, 1/8-27 NPT TO .3750-24 UNJF-3A, ALUM.
1	2	AN806-D3	PLUG, .1875 TUBING, .375-24 UNJF-3A, ALUM.
1	1	011-02964-70	GAP 26 ANGLE OF ATTACK PROBE, SELF-REGULATING, PMA
QTY	**ITEM**	**PART NUMBER**	**DESCRIPTION**

NOTES

1. MAY SUBSTITUTE AN818-3W FOR AN818-3D.

Figure 4-102 GAP 26 Pneumatic Lines

4.4.13.5 Control Box Installation (-20 version only)

Mount the control box (figure 4-103) to a suitable mounting location within two feet of the GAP 26 using (4) #4 or #6 pan or hex head screws (choose screw length that is appropriate to mounting location).

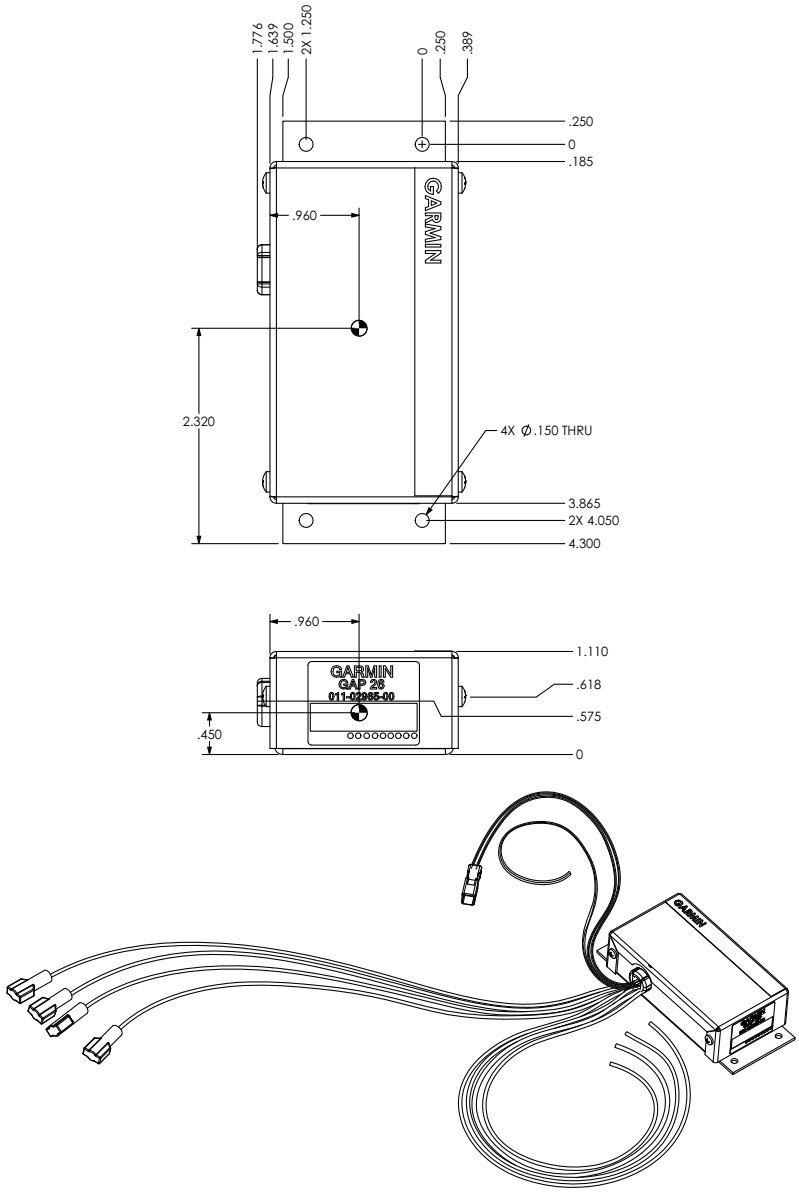

Figure 4-103 GAP 26 Heater Control Box (Used with -20 Unit Only)

Connect the probe to the heater control box as shown in the Probe Wiring diagram (figure 4-104):

1. Connect the white connector from the probe to the white connector from the control box (shown in (figure 4-105). This connection allows the control box to sense probe temperature.
2. Connect the red connectors from the probe to the red connectors from the control box (shown in (figure 4-105). These connections provide power and ground to the heaters.

- Rred wires with red connectors from the control box connect to the plain wires with red connectors from the heater.
- Black wires with red connectors from the control box connect to the banded wires with red connectors from the heater.

3. Connect the bare red and black heater wires from the control box to 14 VDC as shown in figure 4-104.
4. The discrete output (bare blue wire) from the control box (011-02965-00) can be connected to any available discrete input. The discrete output is floating (open-circuit) when the probe is powered off, or when powered on and below 25° C. When the probe is above 25° C and powered on, the discrete output will be shorted to ground. Refer to section 5.5.3.1 for more information

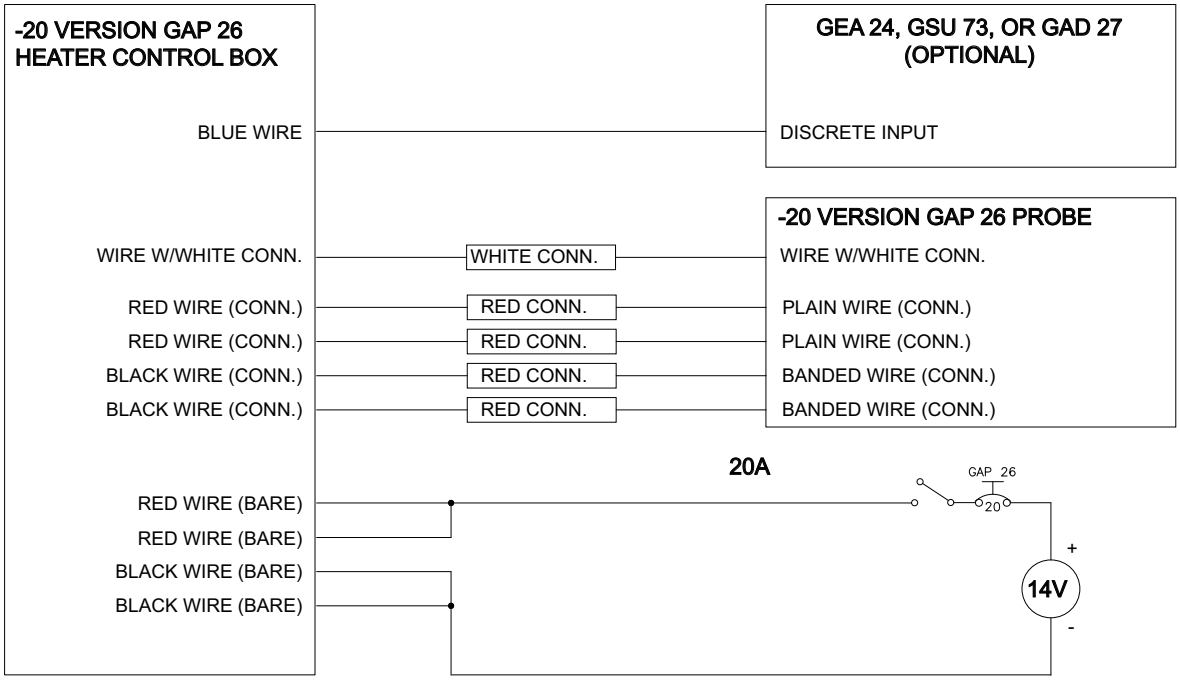

Figure 4-104 P/N 011-02964-20 Probe Wiring

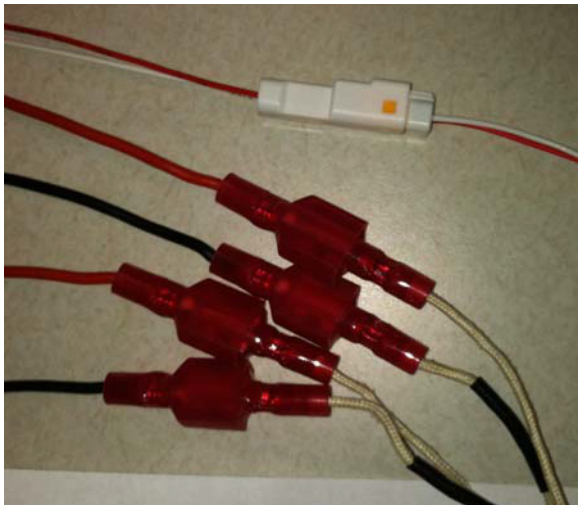

Figure 4-105 P/N 011-02964-20 Probe to Control Box Connectors

4.4.13.5.1 Heater Wiring Configuration

The GAP 26 uses two internal heaters that may be powered by 14 or 28 volt systems. Each of the heaters has two wires, one of these two wires is "banded" (figure 4-106) to help identify individual heaters. These heaters can be connected to a power source as shown in figure 4-107 and figure 4-108.

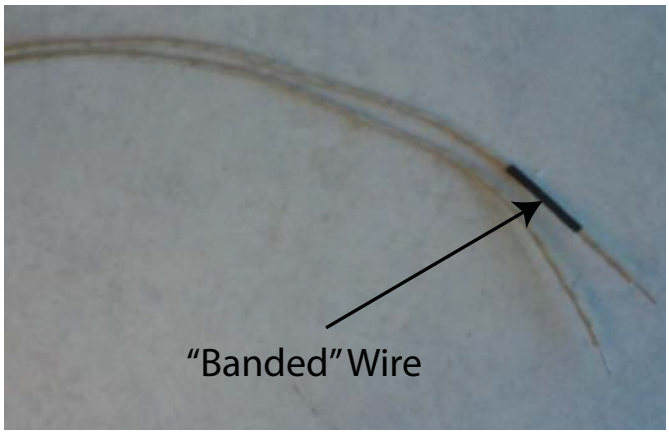

Figure 4-106 GAP 26 Banded Wire

CAUTION

Do not use the heated/regulated version of the GAP 26 (P/N 010-01074-20) in 28V installations. The heated/non-regulated version of the GAP 26 (P/N 010-01074-10) may be used in either 14V or 28V installations when connected as per figure 4-107 or figure 4-108.

CAUTION

Do not connect the heaters in parallel to 28V. Refer to figure 4-108 for use on 28V aircraft. The heaters will be damaged if connected incorrectly to 28V.

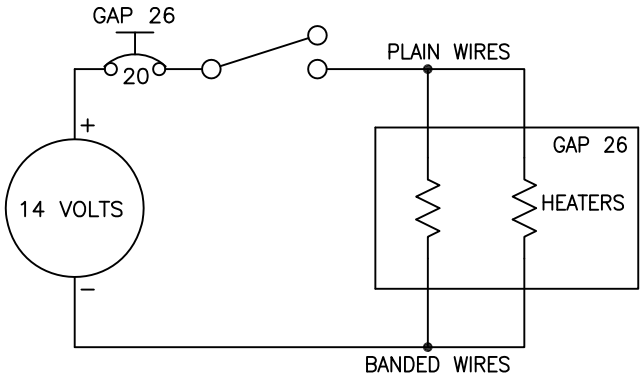

NOTES FOR 14V INSTALLATION
1. AIRCRAFT POWER WIRING TO PROBE SHOULD BE MINIMUM 14 AWG UP TO 12 FT, 12 AWG FROM 13 TO 20 FT, AND 10 AWG FROM 21 TO 30 FT. (AC 43.13-1B)

Figure 4-107 GAP 26 14V Installation Configuration (P/N 010-01074-10)

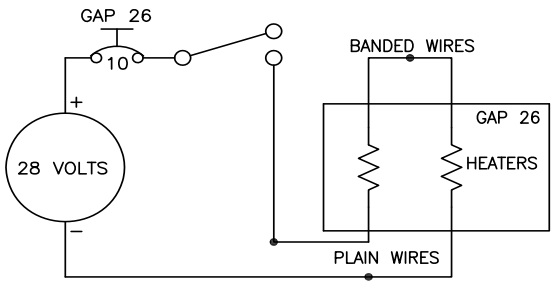

NOTES FOR 28V INSTALLATION

1. CAUTION: 28V INSTALLATIONS MUST FOLLOW THIS GUIDANCE AND CONNECT HEATERS IN SERIES AS SHOWN OR PROBE WILL BE DAMAGED.
2. AIRCRAFT POWER WIRING TO PROBE SHOULD BE MINIMUM 18 AWG UP TO 12 FT, 16 AWG FROM 13 TO 20 FT, AND 14 AWG FROM 21 TO 30 FT. (AC 43.13-1B)
3. CONNECT BANDED WIRES WITH INSULATED MS25181 22-18 AWG BUTT SPLICE CONNECTOR OR EQUIVALENT. BANDED WIRES MAY BE SHORTENED IF DESIRED.

Figure 4-108 GAP 26 28V Installation Configuration (P/N 010-01074-10)

4.4.13.6 General Specifications

CAUTION

Do not connect the heated/regulated version of the GAP 26 (P/N 010-01074-20) to 28 VDC. The heated/non-regulated version of the GAP 26 (P/N 010-01074-10) may be connected to either 14V or 28V.

P/N 010-01074-00 version of the GAP 26 does not require power as it does not have a heater. The initial current vs temperature requirements for P/N 010-01074-10 and P/N 010-01074-20 are listed in table 4-58.

Table 4-58 GAP 26 Initial Current Draw vs. Probe Temperature (-10 and -20 Units)

Probe Temperature	-40°C (-40°F)	0°C (32°F)	50°C (122°F)	100°C (212°F)	175°C (347°F)
Amps	12 Amp	9.25 Amp	7.3 Amp	5.85 Amp	4.36 Amp

Table 4-58 refers to probe temperature at initial turn-on. For example, upon turn-on at -40°C, the standard (-10) or regulated (-20) heated probes will initially draw 12 amps, but will draw less current as they warm up.

The -10 non-regulated probe draws current proportional to the probe temperature as shown in table 4-58.

The -20 heated regulated probe uses similar power to the -10 probe when airborne, but will limit the current to regulate the probe temperature to ~75°C (167°F) when the probe temperature reaches this value.

Table 4-59 GAP 26 Weight and Size

LRU	Weight lb. (kg)	Dimensions in. (mm)		
		Height	Width	Depth
GAP 26	0.59 (0.27) [1] 0.73 (0.33) [2]	2.59 (65.8)	6.11 (155.2)	0.82 (20.8)

Notes:

[1] Weight with aluminum mount tube. The aluminum mount tube has machined mounting tabs and the wall thickness is greater at the upper end versus the lower end.

[2] Weight with steel mount tube. The steel mount tube has welded mounting tabs and a constant wall thickness throughout the tube.

4.4.13.7 Outline and Installation Drawings

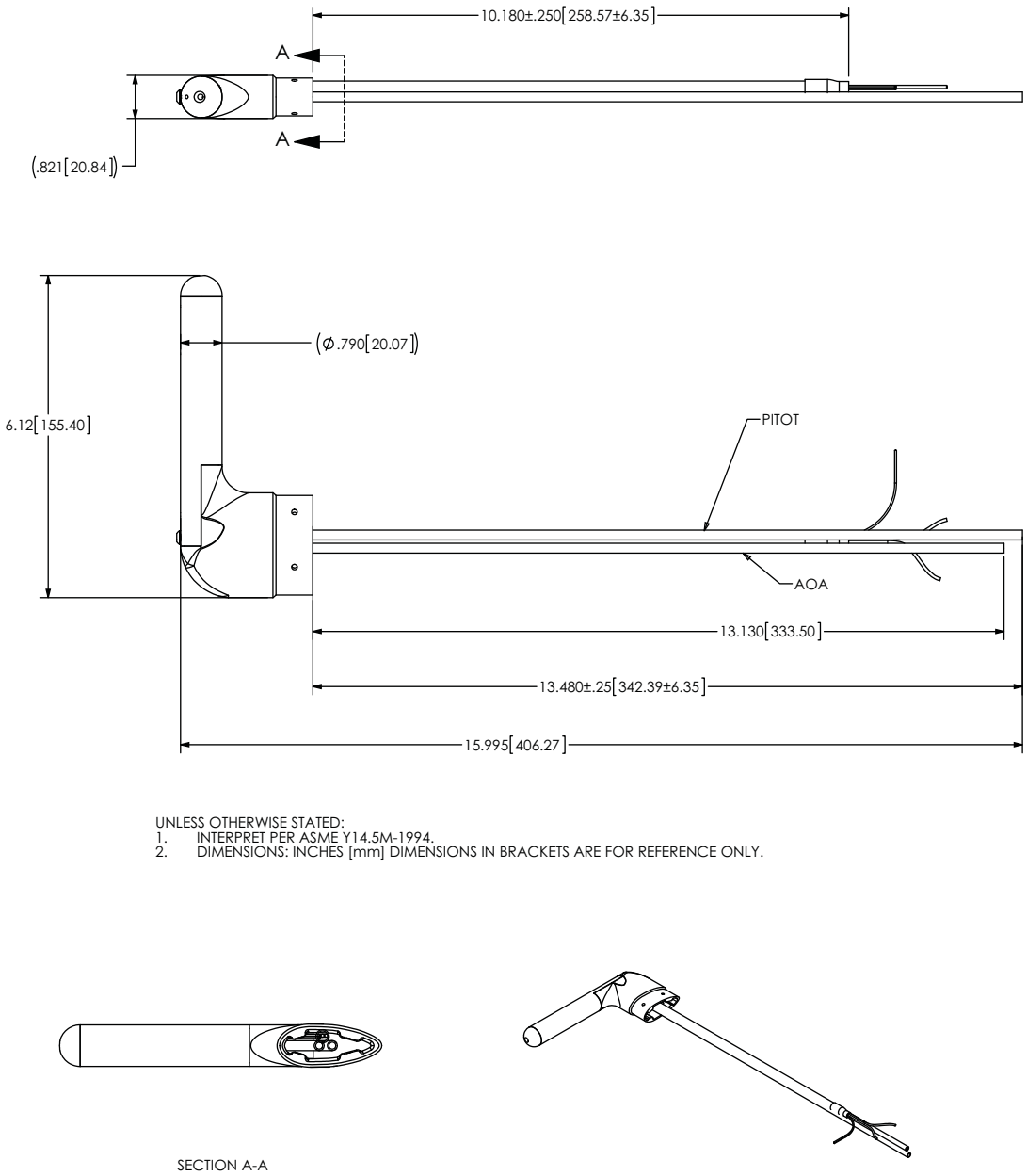

Figure 4-109 GAP 26 Outline Drawing

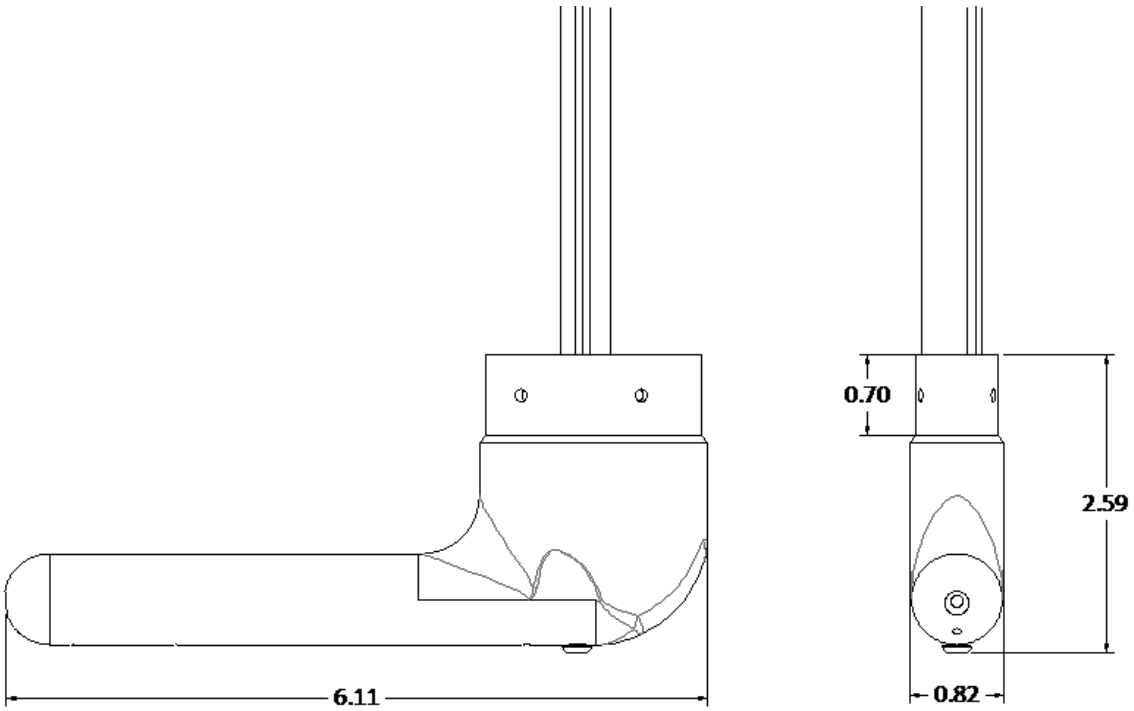

Figure 4-110 GAP 26 Probe Dimensions

4.4.14 GHA 15 Height Advisor Installation

This section contains installation information for the GHA15 Height Advisor.

Figure 4-111 GHA 15

4.4.14.1 Equipment Description

The GHA 15 uses radar to provide above ground level (AGL) sensor readings up to a maximum of 500 ft and is designed for aircraft flying up to 25,000 ft. The GHA 15 output provides AGL data and configurable audio callouts for reference only. The GHA 15 does not satisfy aircraft radar altimeter requirements.

The GHA 15 features low-power FMCW operation, operation from ground to 500 ft AGL Max., accuracy of +/- 1.5 ft (3 - 100 ft AGL), +/- 2% (>100 - 500 ft AGL), CAN interface for convenient unit configuration, calibration and software updates, in addition to a standard USB high speed interface for diagnostics purposes.

NOTE

It is recommended to install a USB harness to provision the installation for access to diagnostic information, refer to section A.13 for more information.

4.4.14.2 Available Equipment

Table 4-60 GHA 15 Part Numbers

Model	Assembly P/N	Unit Only P/N
GHA 15	010-02463-00	011-05259-50
GHA 15*, Standard [1]	010-02942-00	011-05259-50

[1] Includes connector kit (P/N 011-05278-00) and install kit (P/N 011-06097-00).

Table 4-61 GHA Available Accessories

Item	Garmin P/N	Quantity
GHA 15 USB-B Pigtail [1]	011-01782-00	1
GHA 15 Connector Kit	011-05278-00	1
GHA 15 Install Kit	011-06097-00	1

[1] USB connection is optional for diagnostics and troubleshooting while aircraft is on ground. Contact Garmin for additional guidance.

Table 4-62 Contents of GHA 15 Connector Kit (P/N 011-05278-00)

Item	Garmin P/N	Quantity
Conn,Circ, Plug, D38999/26, Ins 13- 35, Alum, Crimp, Key A	330-01288-01	1
Conn Seal Plug, MS27488-22	330-90013-01	20
Backshell, Circular, Strain Relief, AS85049/126, RA, Size 13	330-90049-03	1

Table 4-63 Contents of GHA 15 Install Kit (P/N 011-06097-00)

Item	Garmin P/N	Quantity
Screw, 10-32x1.00, PHP, SS/P	211-60212-20	4
O-Ring, MS28775-134, Nitrile, Hydraulic Resistant	251-00011-00	1

4.4.14.3 Mounting Requirements

WARNING

This equipment should be installed and operated with minimum distance 20 cm between the radiator and your body.

NOTE

Stated performance specifications for the GHA 15 can only be achieved when the system is installed in accordance with all the guidelines stipulated in this section and with all other instructions given in this installation manual.

The installer will need to find the best mounting location and surface. Outline and Installation drawing figure 4-112 defines the hole pattern for mounting. This hole pattern is the same as the standard antenna mounting pattern for most modern radar altimeters.

1. Location on Aircraft: The GHA 15 must be mounted on a surface on the bottom of the aircraft near the center point of pitch and roll rotation (this reduces the effect of momentary pitch and roll altitude offsets/inaccuracies during approach and landing or while maneuvering the aircraft).
2. Angle of Antenna to Ground: The GHA 15 must be mounted so the surface of the GHA 15 is within +/- 6° of horizontal during level flight. If the adapter plates are manufactured to make sure this angle is met, the adapters must not recess the unit surface within the skin of the aircraft. The adapters must only extrude the GHA 15 surface outside the skin of the aircraft.
3. Mounting Surface: The GHA 15 may be mounted on non-metallic surfaces or on a continuous metallic surface.
4. Minimum Height: The minimum unit height possible above ground while parked, taxiing, or at aircraft touchdown is 20 inches for any aircraft.
5. Antenna Clearance Cones: The location chosen for the GHA 15 must be free of aircraft projections (landing gear, flaps, drainage vents, etc.,) within a 120° cone from the GHA 15 downward to prevent locking onto false altitude returns. Consider all possible modes of aircraft operation when establishing compliance with this guideline (e.g. – landing gear distances while in transition, flap distances while fully extended, etc.).
6. Distance to Other Antennas: It is encouraged to maximize GHA 15 separation from other antennas aboard the aircraft when possible while meeting remaining guidelines in this section.

4.4.14.4 Unit Installation

CAUTION

The installation of a doubler is essential to maintain structural integrity of the antenna installation. Some aircraft may have existing provisions for a doubler (permanently attached to the skin) or backing plate (removable). If the aircraft is not equipped with mounting provisions, refer to AC 43.13-2B for guidance on manufacturing and installing doublers.

CAUTION

Do not use construction grade RTV sealant or sealants containing acetic acid. These sealants may damage the electrical connections to the antenna. Use of these type sealants may void the antenna warranty.

CAUTION

Use caution to make sure the unit connector is not contaminated with sealant.

Refer to AC 43.13-2B, Chapter 3 for general guidance on external antenna installation.

1. Refer to figure 4-112 for the appropriate mounting cutout. Drill or punch the mounting holes as necessary.
2. Install a doubler plate to reinforce the aircraft skin, as necessary.
3. Secure the O-ring in the O-ring groove on the underside of the unit.
4. Place unit over mounting holes, using the four screw holes to align the unit. Insert the supplied four screws.
5. Washers and locking nuts (not provided, may be part of doubler plate) are required to secure the unit using the supplied screws (or equivalent). Torque should be evenly applied across all mounting screws to avoid deformation of the mounting area. Do not over tighten screws.

Table 4-64 GHA 15 Mounting Specifications

Antenna	Mounting Screws	Torque Specifications
GHA 15	10-32 Stainless Steel	25-30 inch-pounds

6. Make sure the unit is electrically bonded.
7. Seal the unit to the fuselage using electrical grade sealant. Run a bead of the sealant along the edge of the unit where it meets the exterior aircraft skin.

4.4.14.5 General Specifications

Table 4-65 GHA 15 Power and Current

LRU	Supply Voltage	Current Draw
GHA 15	14 VDC	0.272 Amp typical, 0.350 Amps max
	28 VDC	0.139 Amp typical, 0.175 Amps max

Table 4-66 GHA 15 Dimensions and Weights

LRU	Width	Height	Depth	Unit Weight	Weight of Unit and Connector(s)
GHA 15	3.55 inches (90.2 mm)	4.35 inches (110.5 mm)	1.02 inches (25.9 mm) 2.47 inches (62.7 mm) w/connectors	0.5 lbs (0.23 kg)	0.65 lbs (0.29 kg)

4.4.14.6 Outline and Installation Drawings

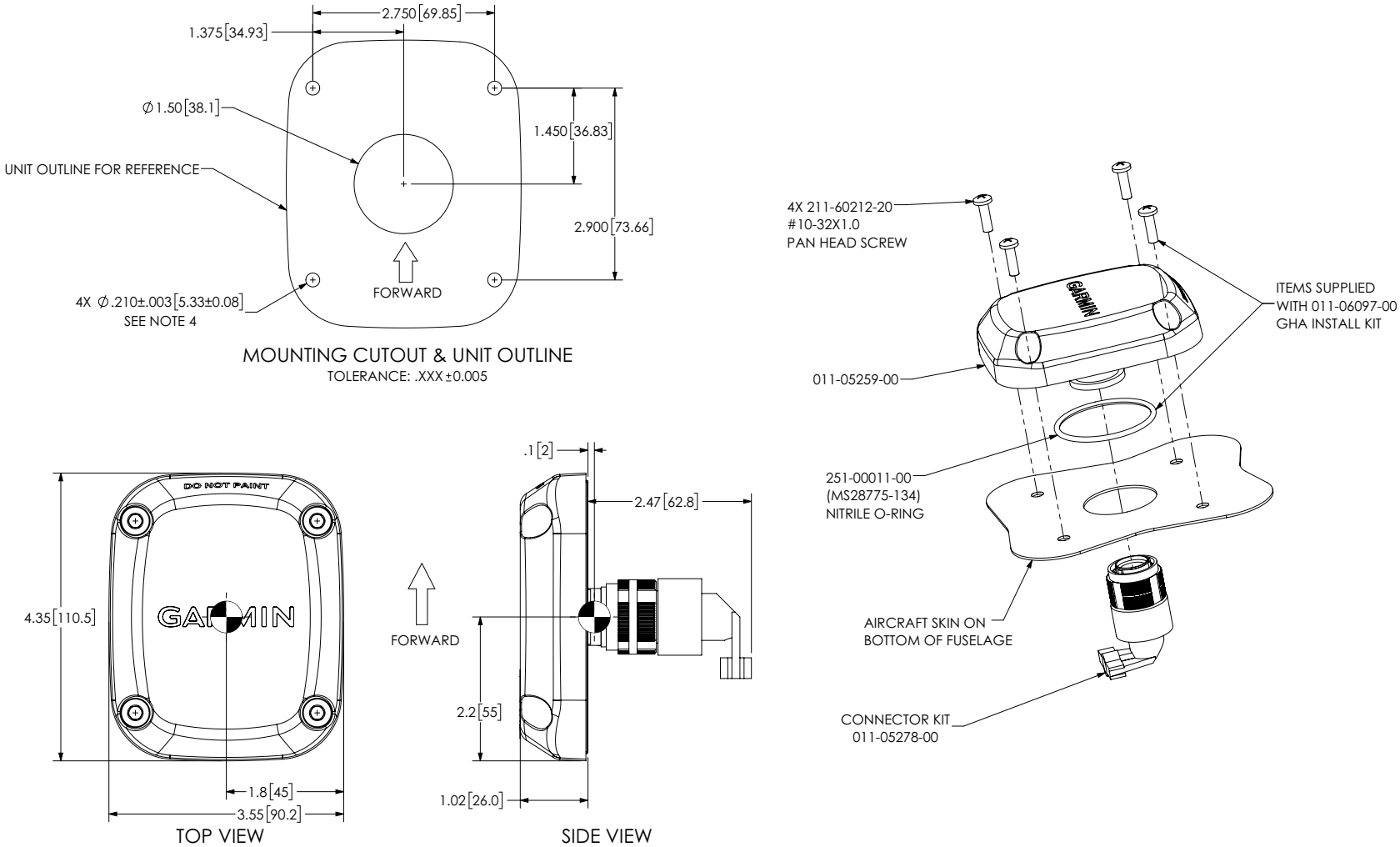

NOTES:
1. DIMENSIONS: INCHES[mm]. METRIC VALUES ARE FOR REFERENCE ONLY.
2. DIMENSIONS ARE NOMINAL AND TOLERANCES ARE NOT IMPLIED UNLESS SPECIFICALLY STATED.
3. FABRICATE AND INSTALL A DOUBLER PLATE AS REQUIRED TO COMPLY WITH APPLICABLE AIRWORTHINESS REGULATIONS.
4. MOUNTING HOLES FOR #10 PAN HEAD SCREW (4 PLACES).

Figure 4-112 GHA 15 Outline Drawing

4.4.15 GI 260 AOA Indicator Display

This section contains general information as well as installation information for the GI 260. Use this section to mount the GI 260 unit.

Figure 4-113 GI 260 Unit View

4.4.15.1 Equipment Description

The GI 260 is a remote mount Angle of Attack (AOA) indication. The GI 260 has a pigtail harness for network communication and power connections.

The GI 260 has two keys below the display labeled as TEST and MUTE. When the TEST key is pressed, the GI 260 performs a self test. During the self test, all indicators on the display will be illuminated to signal the unit passes the test. The red chevrons on the display will flash on and off to indicate a failure. Releasing the **TEST** key restores normal operation.

Pressing the **MUTE** key mutes any currently playing audio. The audio will then remain muted until any Stall Warning (red) or Caution Alert (yellow) conditions have returned to a Minimum Visible (green) condition. The mute operation is then reset, and audio is unmuted.

4.4.15.2 Required Equipment

Table 4-67 GI 260 Part Numbers

Model	Assembly Part Number	Unit Only Part Number
GI 260 [1]	010-01287-00	011-03458-00

[1] The GI 260 Socket Mount (011-03562-00) is included with the unit. The Socket Mount is secured using (3) #6-32 100º flat head screws be supplied by the installer.

4.4.15.3 Unit Installation

Fabrication of a wiring harness is required. Sound mechanical and electrical methods and practices are recommended for installation of the GI 260. Refer to section 4.1.2 for wiring considerations, and to section A.14 for pinouts.

1. Select a mounting location where the GI 260 is easily visible, but does not impede the pilot's field of view, typically the glareshield.
2. If needed, make a hole in the glareshield to run the pigtail harness through.
3. Secure the socket mount to a suitable mounting location (glareshield) using (3) #6-32 100º flat head screws.
4. Insert the GI 260 into the socket mount, adjust for best viewing angle.
5. Make connections to the pigtail harness, as shown in appendix B, by either splicing wires or adding a D-sub connector to the end of the pigtail (after it has run through glareshield or mounting surface) and connect to another D-sub connector on harness.
6. Shields should be continued through any splices by grounding your shield to the spare shield ground drain wires.
7. If applicable, assemble the connector backshells and connect backshell connectors.

4.4.15.4 General Specifications

Table 4-68 GI 260 Power and Current

LRU	Supply Voltage	Current Draw
GI 260	14 VDC	0.4 Amp
	28 VDC	0.2 Amp

Table 4-69 GI 260 Dimensions and Weights

LRU	Width	Height	Depth	Unit Weight	Weight of Unit and Connector(s)
GI 260 Including Socket Mount	1.36 inches (34.6 mm)	3.19 inches (81.0 mm)	2.36 inches (60.0 mm)	0.27 lbs (0.122 kg)	NA

4.4.15.5 Outline and Installation Drawings

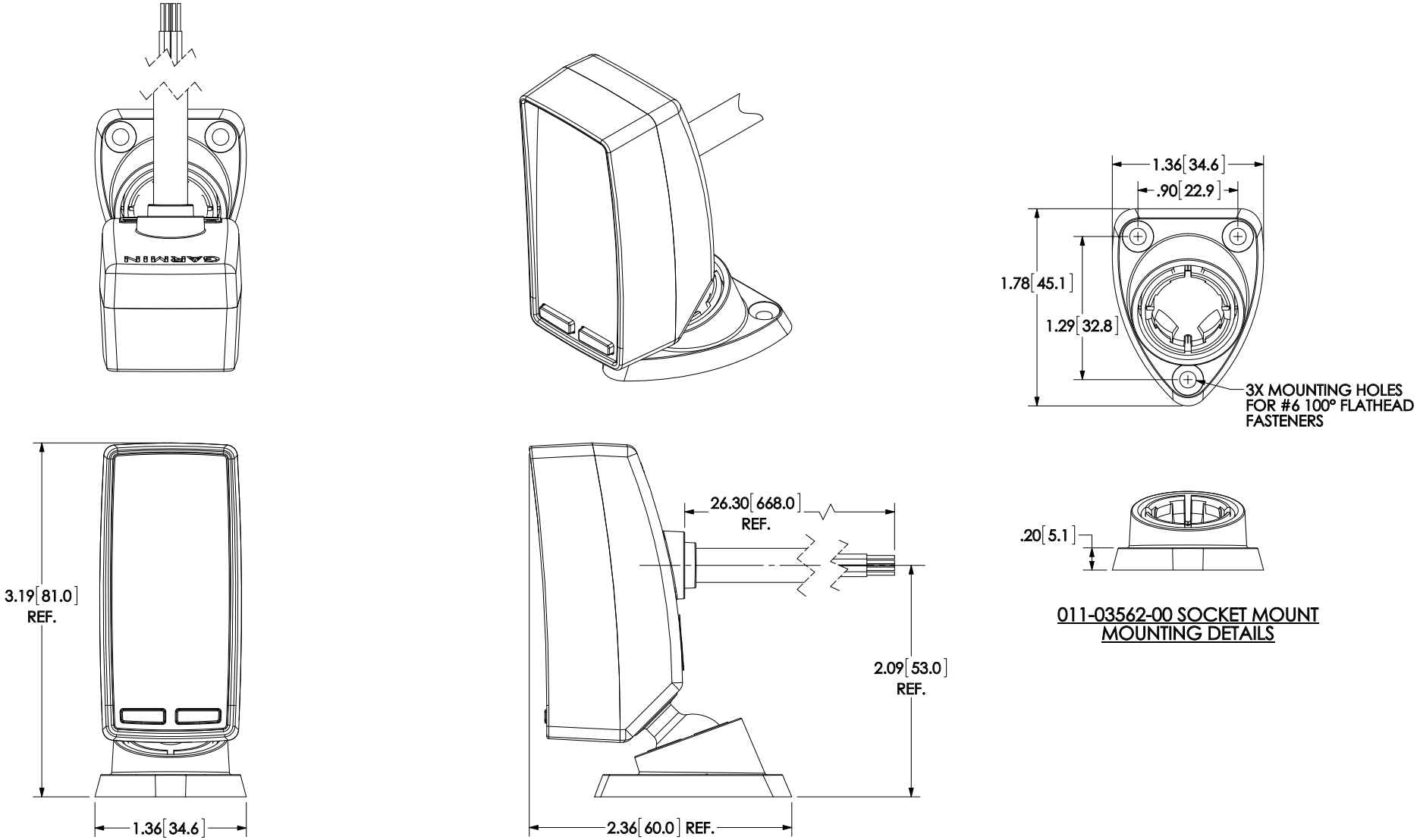

NOTES:
1. DIMENSIONS: INCHES[mm]. METRIC VALUES ARE FOR REFERENCE ONLY.
2. DIMENSIONS ARE NOMINAL AND TOLERANCES ARE NOT IMPLIED UNLESS SPECIFICALLY STATED.

Figure 4-114 GI 260 Outline/Assembly Drawing

4.4.16 GTR 205x COM Radio Installation

Installation instructions are available in P/N 190-02766-21 *GTR 205x(R) Installation Manual*.

4.4.17 GTR 205R(x) COM Radio Installation

Installation instructions are available in P/N 190-02766-21 *GTR 205x(R) Installation Manual*.

4.4.18 GEA 110 EIS Installation

This section contains general information as well as installation information for the GEA 110. Use this section to mount the GEA 110 unit.

4.4.18.1 Equipment Description

The GEA 110 is an input/output system used to monitor and power engine and airframe sensors. The GEA 110 can monitor engine data for piston engine aircraft with up to six cylinders for display on the AXIS PFD. The GEA 110 communicates via RS-485.

The GEA 110 can be mounted on the engine side of the firewall in the engine compartment or on a bulkhead that is supporting the powerplant installation.

4.4.18.2 Required Equipment

Table 4-70 Required Equipment

LRU	Part Number	
	Unit	Catalog
GEA 110 [1]	011-03454-01	010-01329-01

[1] Interface requires a GDU 116C or GDU 116NC.

Table 4-71 GEA 110 Kit Contents

LRU	Kit Description	Part Number
GEA 110	GEA 110 install tray	011-03941-00
	GEA 110 connector kit	011-03527-50 [1]
	GEA 110 sealed connector/config module kit	011-03527-51 [1]

[1] Only one connector kit is required.

4.4.18.3 Unit Installation

The GEA 110 can be mounted directly to the airframe in the aircraft fuselage or the engine compartment with or without an optional installation tray. The unit must be mounted so that the connectors are viewable and where it can be inspected and serviced.

The GEA 110 can be mounted at any orientation, but a vertical orientation with connectors pointing down is preferred in locations exposed to moisture or fluids. Sealed connector kit (P/N 011-03527-51) must be used if the GEA 110 can come into contact with fluids or when mounted in the engine compartment.

The GEA 110 must not be placed directly below fluid lines (e.g., fuel, oil, hydraulic). If mounted close to the aircraft powerplant, the GEA 110 must not block or alter the flow of air required for engine cooling. It must be installed as far away as practical from heat sources.

GEA 110 electrical connector screws must be torqued per figure 4-116 when the GEA 110 is installed in the engine compartment; otherwise, use recommended torque noted in figure 4-117.

4.4.18.4 General Specifications

Table 4-72 GEA 110 Weight and Size

LRU	Weight lb. (kg)	Dimensions		
		Height	Width	Depth
GEA 110 unit	1.21 (0.55)	7.75 (196.8) [1]	4.81 (122.2) [2]	1.63 (41.4)
GEA 110 with tray and connector	2.11 (0.96)			2.13 (54.1)

[1] Height listed includes tray.
[2] Width listed includes tray.

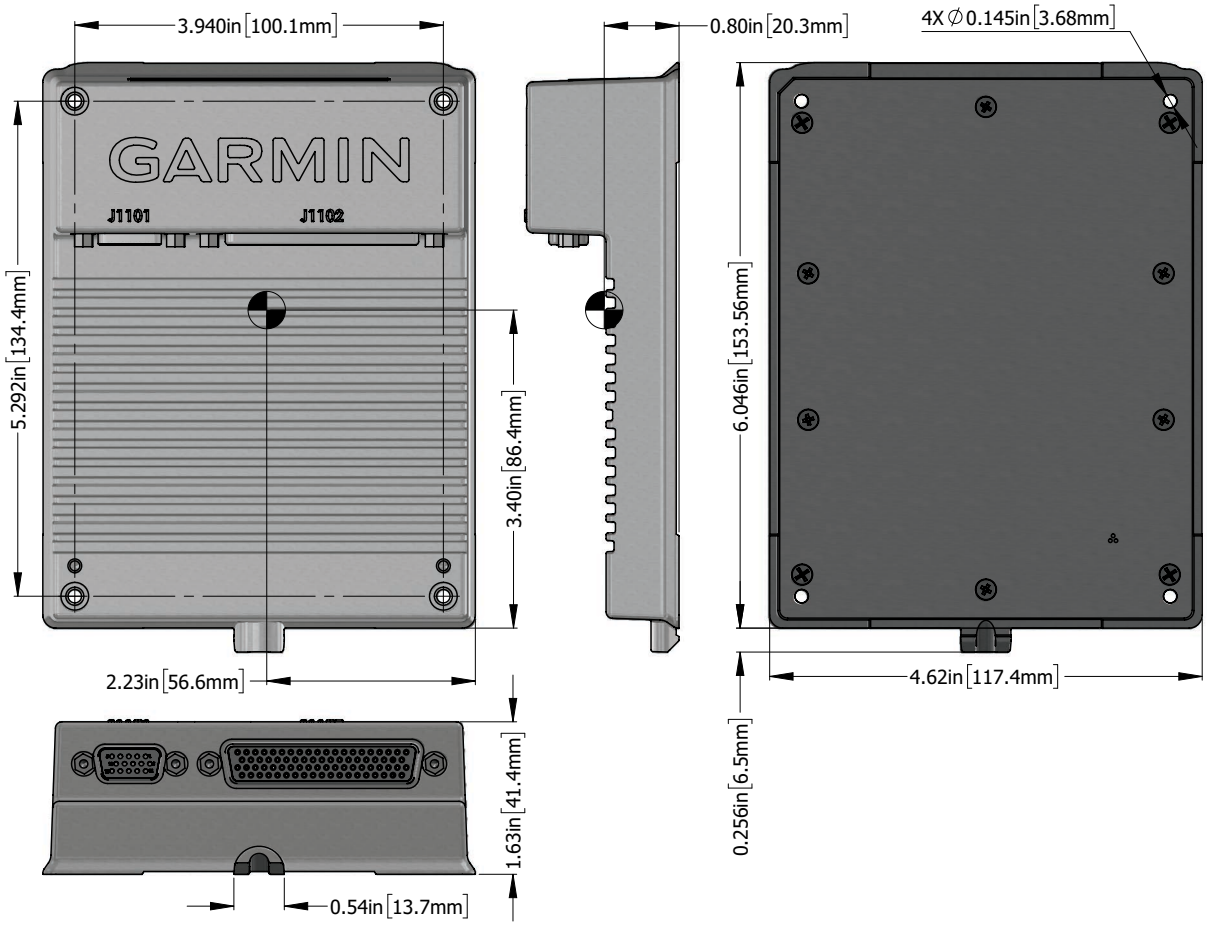

Figure 4-115 GEA 110 Dimensions

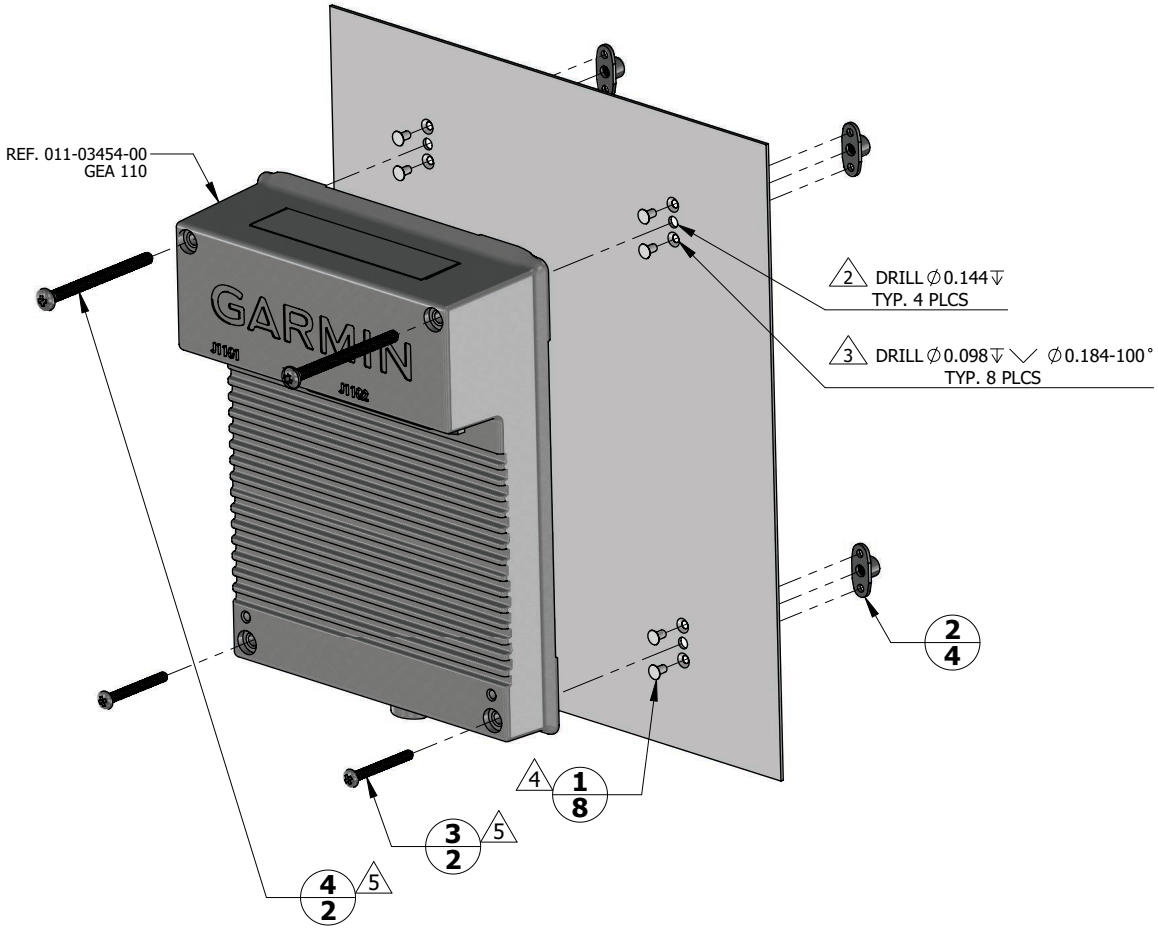

QTY.	ITEM	PART NUMBER	DESCRIPTION
2	4	MS35206-237	SCREW, MACHINE, PAN HEAD, CROSS RECESSED, CAD PLATED .1380- 32 UNC-2A, 1.750 IN LONG
2	3	MS35206-234	SCREW, MACHINE, PAN HEAD, CROSS RECESSED, CAD PLATED .1380- 32 UNC-2A, 1.000 IN LONG
4	2	MS21069L06	NUT, SELF-LOCKING, PLATE, TWO-LUG, REDUCED RIVET SPACING, LOW HEIGHT, STEEL .138-32 UNJC-3B
8	1	MS20426AD3-3	RIVET, SOLID, COUNTERSUNK 100 DEG, PRECISION HEAD, 3/32 IN OD, 3/16 IN LONG

NOTES

1. DIMENSIONS ARE IN INCHES UNLESS OTHERWISE SPECIFIED.

2 FASTENER HOLES ARE LOCATED TO MATCH GEA 110.

3 FASTENER HOLES ARE LOCATED TO MATCH NUTPLATE ITEM 2.

4 RIVETS ARE INSTALLED PER MIL-R-47196 (NASM47196) RIVET, BUCK TYPE, *PREPARATION FOR AND INSTALLATION,* OR PER MIL-STD-403 *PREPARATION FOR AND INSTALLATION OF RIVETS AND SCREWS, ROCKE , T MISSILE, AND AIRFRAME STRUCTURES.*

5 TORQUE .1380-32 UNC-2A SCREWS 8.0 ± 1.0 LBF-IN.

Figure 4-116 GEA 110 Installation (Mounted Directly to Airframe Example)

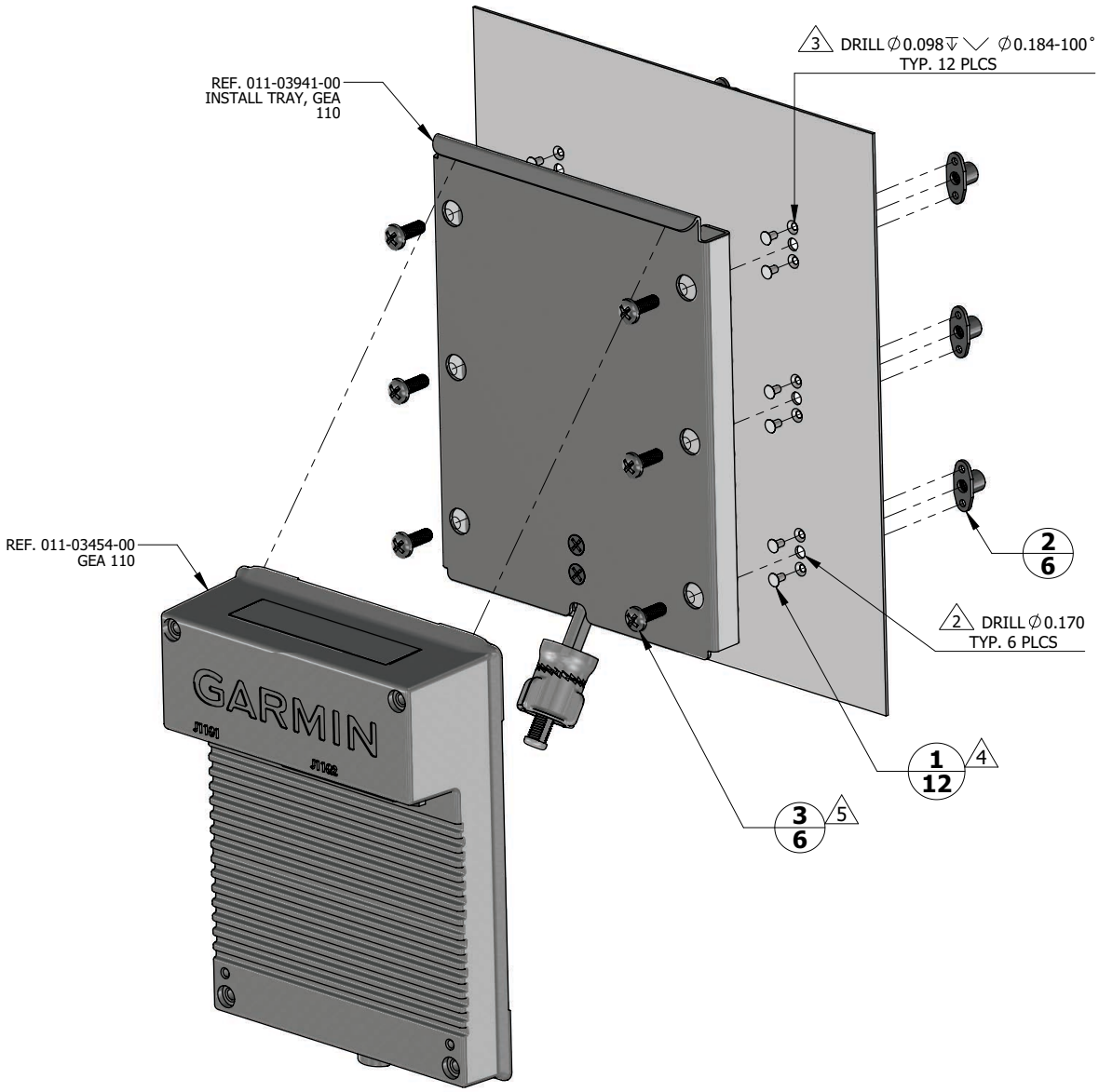

QTY.	ITEM	PART NUMBER	DESCRIPTION
6	3	MS27039-0807	SCREW, MACHINE, PAN HEAD, STRUCTURAL, CROSS RECESSED .1640-32 UNC-3A, 0.469 IN
6	2	MS21069L08	NUT, SELF-LOCKING, PLATE, TWO-LUG, REDUCED RIVET SPACING, LOW HEIGHT, STEEL .164-32 UNJC-3B
12	1	MS20426AD3-3	RIVET, SOLID, COUNTERSUNK 100 DEG, PRECISION HEAD, 3/32 IN OD, 3/16 IN LONG

NOTES

1. DIMENSIONS ARE IN INCHES UNLESS OTHERWISE SPECIFIED.

2. FASTENER HOLES ARE LOCATED TO MATCH GEA 110 INSTALL TRAY.

3. FASTENER HOLES ARE LOCATED TO MATCH NUTPLATE ITEM 2.

4. RIVETS ARE INSTALLED PER MIL-R-47196 (NASM47196) RIVET, BUCK TYPE, *PREPARATION FOR AND INSTALLATION,* OR PER MIL-STD-403 *PREPARATION FOR AND INSTALLATION OF RIVETS AND SCREWS, ROCKET , MISSILE, AND AIRFRAME STRUCTURES.*

5. TORQUE .1640-32 UNC-2A SCREWS 13.5 ±1.5 LBF-IN.

Figure 4-117 GEA 110 Installation (Mounted on a Tray Example)

4.4.19 GSU 75 ADAHRS Installation

This section contains general information as well as installation information for the GSU 75. Use this section to mount the GSU 75 unit.

4.4.19.1 Equipment Description

The GSU 75 Air Data/Attitude and Heading Reference System (ADAHRS) is a remote-mounted LRU that provides altitude, airspeed, attitude, and heading data. Data is provided via ARINC 429. RS-232 is used for maintenance and configuration. The GSU 75 contains tilt sensors, accelerometers, rate sensors, and air data sensors. The GSU 75 interfaces to the GMU 44(B) Magnetometer (or an existing GMU 44) and GTP 59 OAT Probe and uses signals from an approved GPS/SBAS navigator.

4.4.19.2 Required Equipment

Table 4-73 Required Equipment

LRU	Part Number	
	Unit	Catalog
GSU 75 [1]	011-03094-01	010-01127-01

[1] Interface requires a GDU 116C or GDU 116NC.

Table 4-74 GSU 75 Kit Contents

LRU	Kit Description	Part Number
GSU 75	GSU 75 remote rack	117-00608-00
	GSU 75 connector kit	011-03109-00

4.4.19.3 Mounting Requirements

The GSU 75 can be installed in the aircraft's fuselage or the forward equipment bay for multi-engine aircraft. The GSU 75 must be installed such that its axis is parallel or perpendicular to the aircraft longitudinal axis; otherwise, the AHRS won't function correctly. Once an orientation has been determined, the AHRS must be configured for this orientation. The location of GSU 75 must be no more than 13 feet longitudinally and 6.5 feet laterally from the aircraft center of gravity. To minimize the effects of vibration due to propeller noise, installations in multi-engine airplanes may not have the GSU 75 mounted closer than 18 inches from the propeller, as measured along aircraft longitudinal axis (forward or aft).

With respect to aircraft heading and level, the GSU 75 orientation must be such that:

- With the rack on the bottom, the unit axis is orthogonal to the direction of flight within 1.0° (this allows the four azimuth orientations with the unit connector forward, aft, left, or right). Unit orientation is stored in the configuration module.
- Unit is level within 8° in aircraft longitudinal direction (i.e., pitch) and 4° in aircraft lateral direction (i.e., roll).

4.4.19.4 Unit Installation

The GSU 75 mounts directly to the unit remote rack (P/N 117-00608-00). The GSU 75 is retained with a mechanical lock between the unit base and the remote rack and two screws built into the unit. Retention screws should be tightened simultaneously or in small increments to mitigate skewed installation.

The GSU 75 ADAHRS has two 1/8-27 ANPT female thread pressure ports and requires matching male fittings to connect to the aircraft Pitot and static pressure sources. For practical reasons, it is recommended to locate these units in proximity to existing aircraft Pitot and static lines to reduce length of added lines.

4.4.19.5 General Specifications

Table 4-75 GSU 75 Weight and Size

LRU	Weight lb. (kg)	Dimensions		
		Height	Width	Depth
GSU 75 unit	1.36 (0.62)	2.76 (70.0)	3.00 (76.0)	5.16 (131.2) [1]
GSU 75 with rack and connector	1.72 (0.78)			6.56 (166.6)

[1] Depth listed includes rack shown in figure 4-118.

4.4.19.6 Outline and Installation Drawings

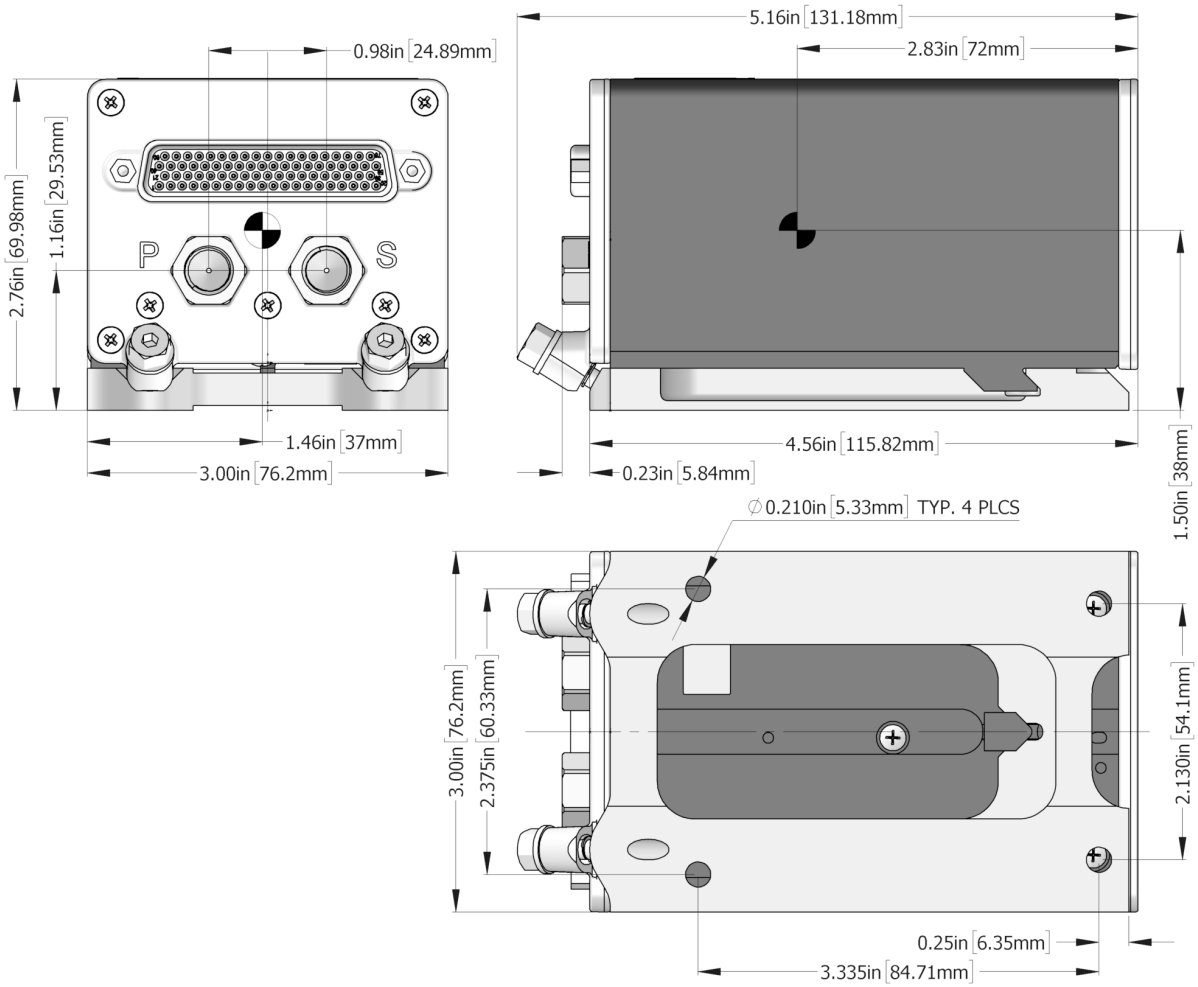

Figure 4-118 GSU 75 Dimensions

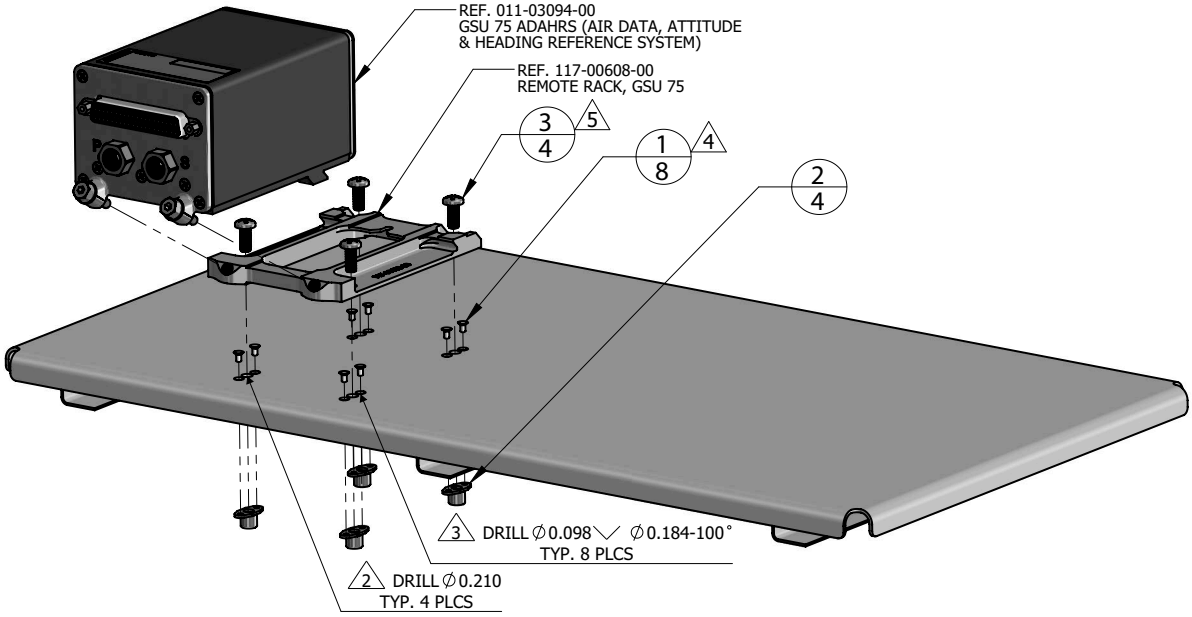

4	3	MS27039-1-07	SCREW, MACHINE, PAN HEAD, STRUCTURAL, CROSS RECESSED .1900-32 UNF-3A, 0.469 IN
4	2	MS21069L3	NUT, SELF-LOCKING, PLATE, TWO-LUG, REDUCED RIVET SPACING, LOW HEIGHT, STEEL .190-32 UNJF-3B
8	1	MS20426AD3-3	RIVET, SOLID, COUNTERSUNK 100 DEG, PRECISION HEAD, 3/32 IN OD, 3/16 IN LONG
QTY.	ITEM	PART NUMBER	DESCRIPTION

Figure 4-119 GSU 75 Installation (Sheet Metal Shelf Example)

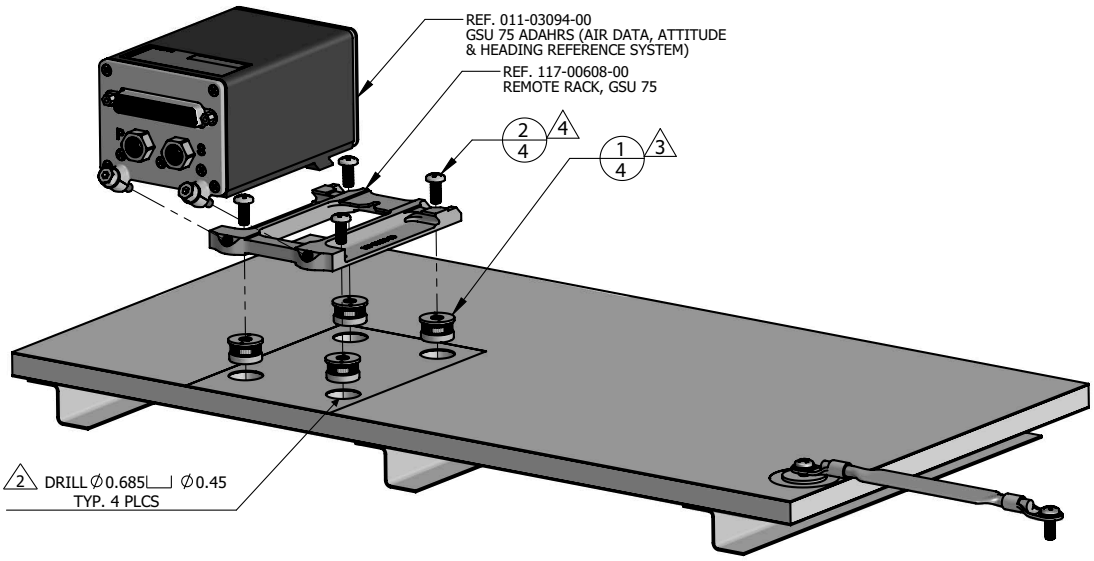

4	2	MS27039-1-07	SCREW, MACHINE, PAN HEAD, STRUCTURAL, CROSS RECESSED .1900-32 UNF-3A, 0.469 IN
4	1	NAS1835A-3	INSERT, SCREW THREAD, MOLDED IN, BLIND THREADED, SELF-LOCKING, FLOATING, SANDWICH PANEL, 0.1900-32UNJF-3B
QTY	ITEM	PART NUMBER	DESCRIPTION

Figure 4-120 GSU 75 Installation (Sandwich Shelf Example)

4.4.20 GCO 14 Carbon Monoxide Detector

This section contains general information as well as installation information for the GCO 14.

4.4.20.1 Equipment Description

The GCO 14 is a carbon monoxide (CO) sensor that provides CO level information to the AXIS flight display system via I2c interface. The AXIS flight display system will use the CO level information to display cabin CO level and alert the flight crew of potentially hazardous levels of CO.

4.4.20.2 Available Equipment

Table 4-76 GCO 14 Available Equipment

LRU	P/N
GCO 14	011-06537-00

Table 4-77 Contents of Cable Kit (P/N 011-06537-10)

Item	P/N	Quantity
Screw, 8-32 x 1.125, PHP, SS/P, w/NYL	211-60239-21	2
Cable Assy, GCO 14	320-01701-00	1
Contact, Pin, Mil Crimp, Size 22D	336-00021-00	5

4.4.20.3 Unit Installation

The GCO 14 is mounted on the AXIS flight display J1012 wiring harness near the D-sub connector.

The GCO 14 is designed to mount in the following ways:

- To a cable harness using zip ties or lacing cord
- To the back of a D-sub connector

4.4.20.3.1 Tie Wrap Method

To install the GCO 14 using tie wraps using the following procedure:

1. Align the GCO 14 to the harness.
2. Secure with two tie wraps (shown) or lacing cord.

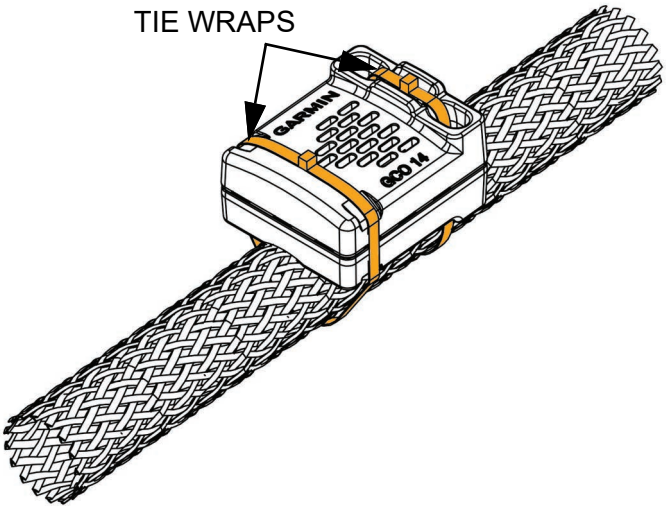

Figure 4-121 Tie Wrap Method

4.4.20.3.2 D-sub Method

1. Align GCO 14 to holes on d-sub connector.
2. Secure with supplied screws, Garmin P/N 211-60239-21, 8-32 1.125, PHP, SS/P, with nylon.
3. Torque screws to 10 ±1 in lbs.

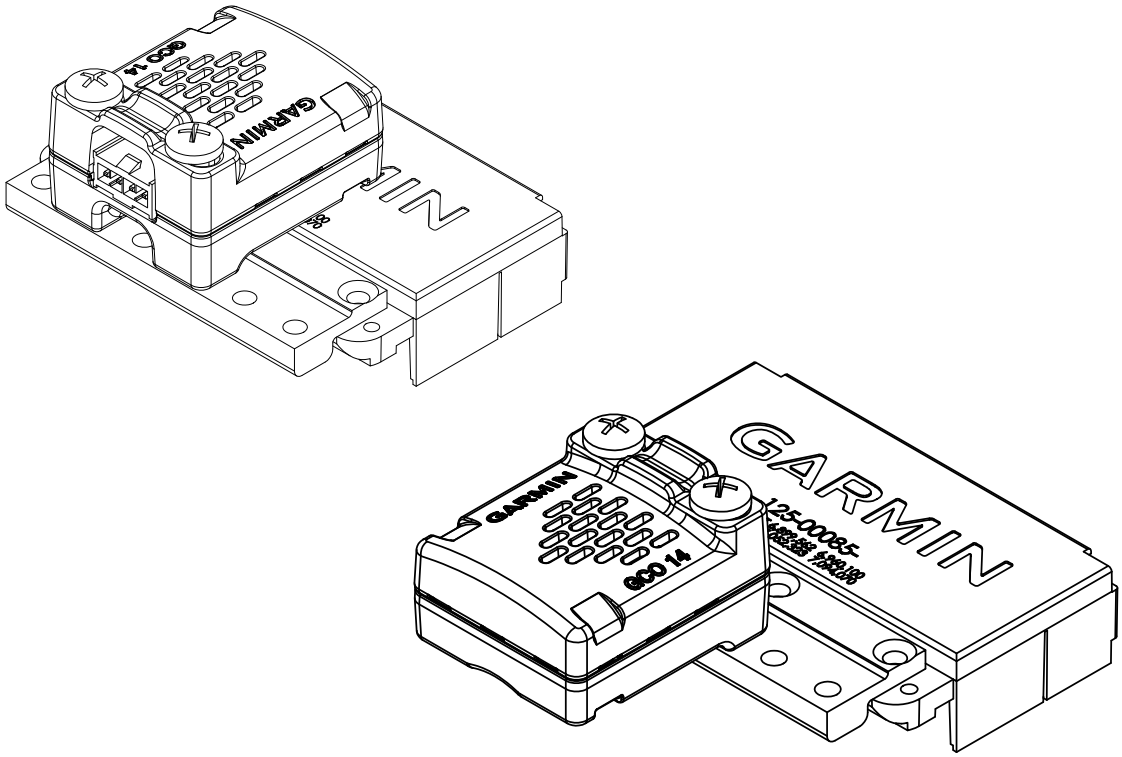

Figure 4-122 D-sub Mounting Options

4.4.20.3.3 GCO with Cable Harness

NOTE

Drain lugs can go in any 8-32 drain wire hole the GCO 14 is not occupying.

Refer to figure 4-123 and figure 4-124 for reference.

1. If necessary, remove the paper tape around retention clip.
2. Attach the 4-pin connector of included cable harness by inserting the retention clip into the GCO 14. A click sounds when it is inserted properly.
3. Ensure the retention clip is fully seated by lightly pulling on the cable.
4. Attach other end of 4-pin connector to configuration module.

To prepare the cable harness for crimp pin installation refer to section 4.3.3.2.

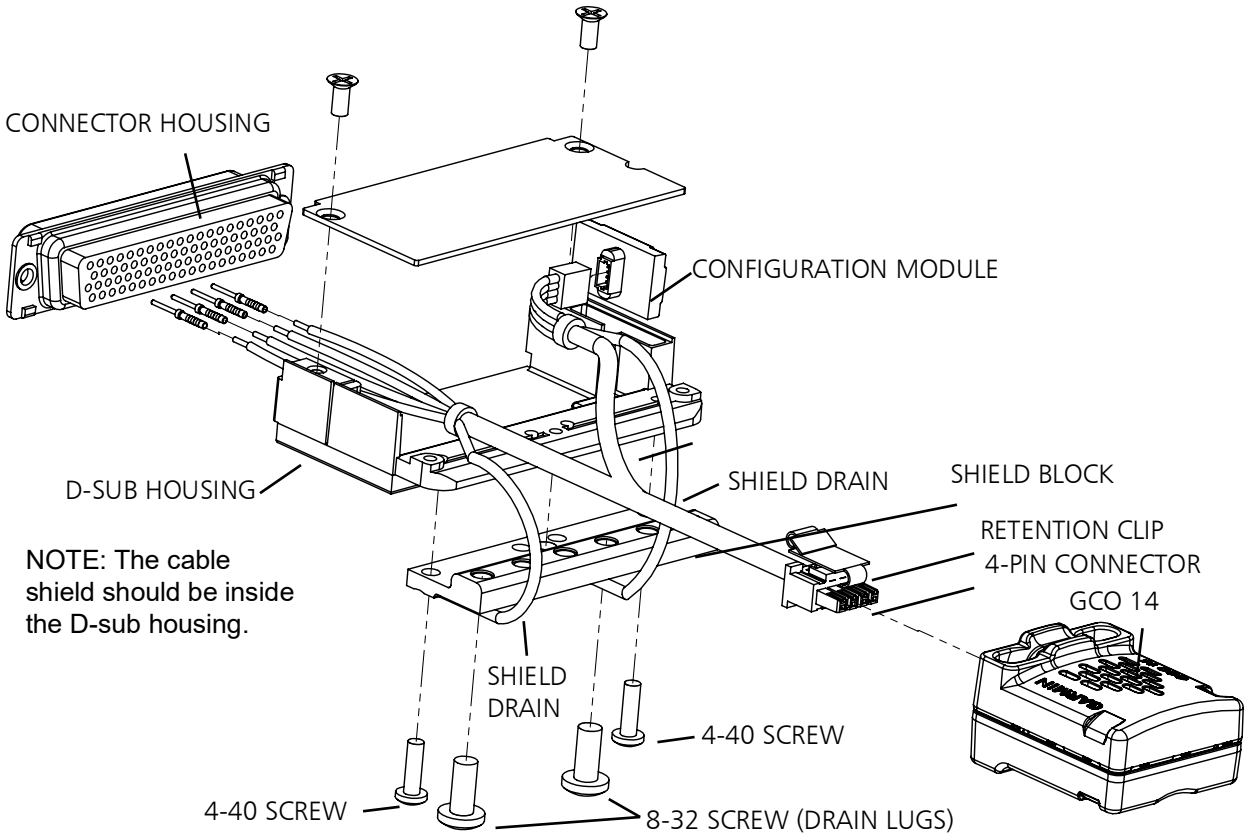

Figure 4-123 GCO 14 with Cable Harness

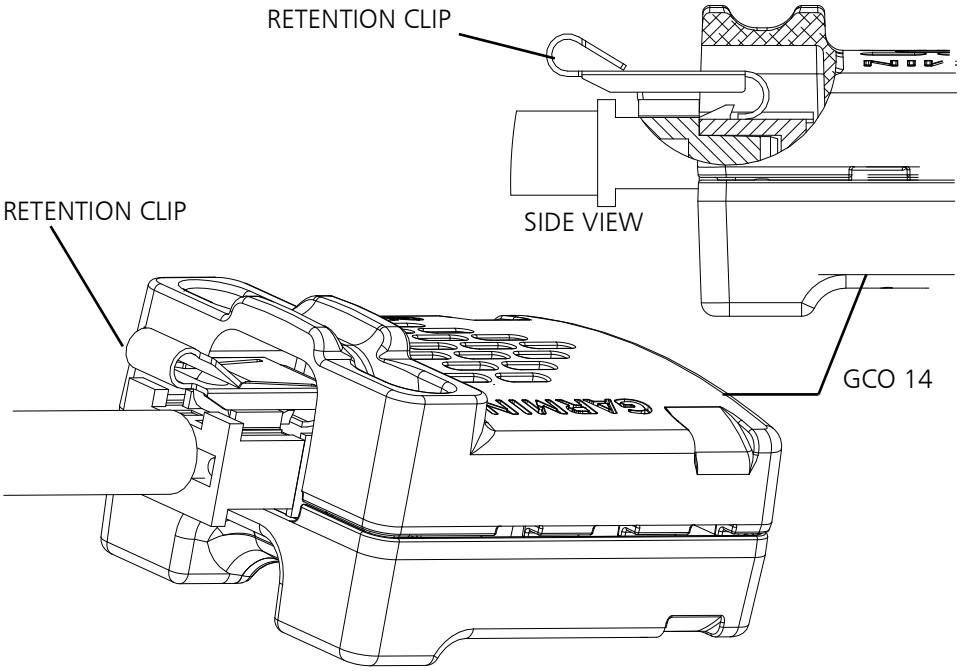

Figure 4-124 Retention Clip Insertion

4.4.20.4 General Specifications

Table 4-78 GCO 14 Weight and Size

LRU	Weight lb. (kg)	Dimensions in. (mm)		
		Height	Width	Length
GCO 14	0.063 (0.028)	0.9 (22)	1.2 (31)	1.5 (37)

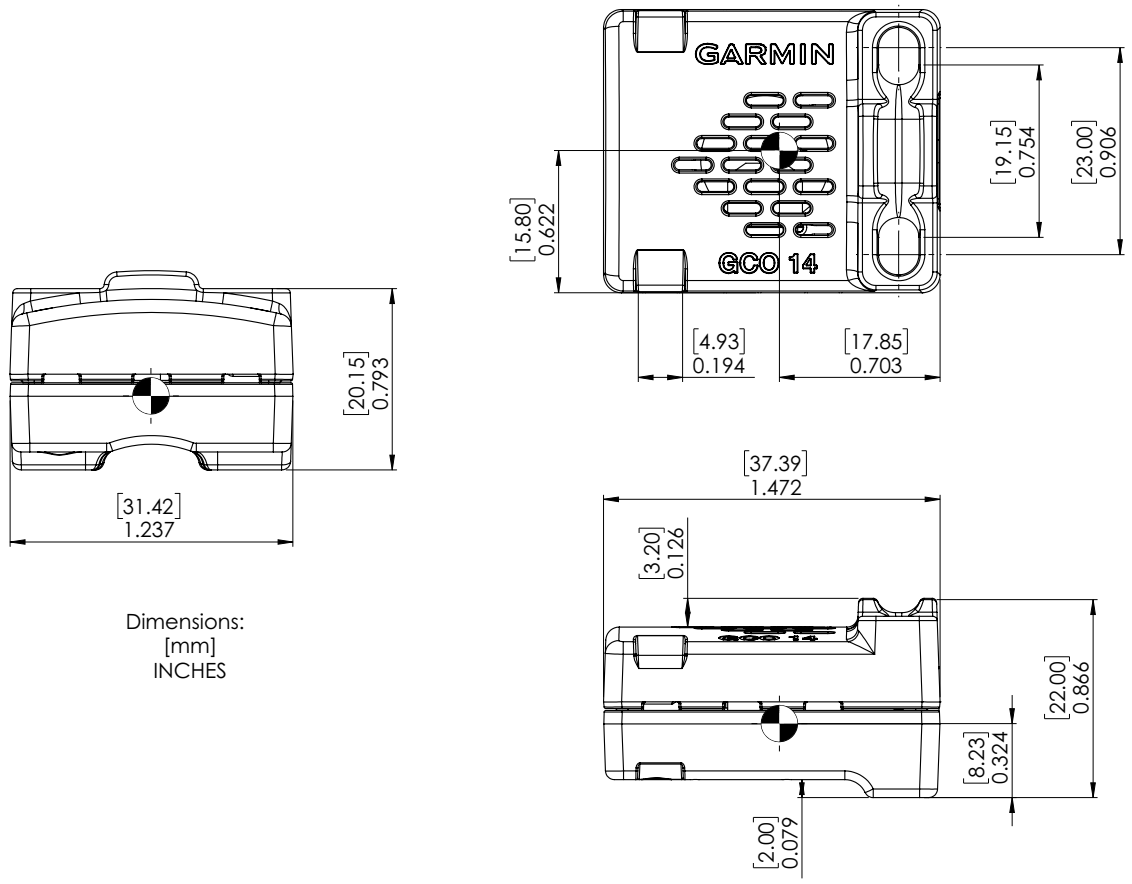

Figure 4-125 GCO 14 Dimensions

4.4.21 Antenna Installation

The information in this section includes guidance for selecting a suitable mounting location, preparing antenna conductors and installing the antennas required to support an AXIS system.

4.4.21.1 Coaxial Cable Termination

Follow the steps below for installation of coaxial cables:

1. When routing the coaxial cable to the radio rack location, keep in mind the recommendations in section 4.1.2.
2. Secure the cable in accordance with AC 43.13-1B chapter 11, section 11.
3. Trim the coaxial cable to the desired length.
4. Install the TNC or BNC connectors per the manufacturer's instructions.

4.4.21.2 GPS Antenna (GDU 116C and GDU 116NC)

4.4.21.2.1 GPS Antenna Mounting Location

The GPS/WAAS antenna is a key element in the overall system performance and integrity for a GPS/SBAS navigation system. The mounting location, geometry, and surroundings of the antenna can affect the system performance and/or availability. The following guidance provides information to aid the installer in ensuring the most optimum location is selected for the installation of the GPS antenna.

The installation guidelines presented here meet the intent of AC 20138D, chapter 13. The greater the variance from these guidelines, the greater the chance of decreased availability.

Approach procedures with vertical guidance are the most sensitive to these effects. LNAV only approaches, terminal operations, and en route operations may also be affected. Because meeting all of these installations guidelines may not be possible on all aircraft, these guidelines are listed in order of importance to achieve optimum performance. Items 3–5 in the list below are of equal importance and their significance may depend on the aircraft installation. The installer should use their best judgment to balance the installation guidelines. Reference figure 4-124 for the recommended placement of the GPS antenna.

1. Mount the antenna as close to level as possible with respect to the normal cruise flight attitude of the aircraft. If the normal flight attitude is not known, substitute the waterline, which is typically referenced as level while performing a weight and balance check.
2. The GPS antenna should be mounted in a location to minimize the effects of airframe shadowing during typical maneuvers. Typically mounting farther away from the tail section reduces signal blockage seen by the GPS antenna.
3. Mount no closer than two feet from any VHF COM antenna or any other antenna which may emit harmonic interference at the L1 frequency of 1575.42 MHz. An aircraft EMC check (reference VHF COM interference check in Post Installation Checkout procedures) can verify the degradation of GPS in the presence of interference signals. If an EMC check reveals unacceptable interference, insert a GPS notch filter in line with the offending VHF COM or the (re-radiating) ELT transmitter.
4. Mount no closer than two feet from any antenna emitting more than 25 watts of power. An aircraft EMC check can verify the degradation of GPS in the presence of interference signals.
5. To achieve the best possible low-elevation antenna gain (by minimizing pattern degradation due to shadowing and near-field interaction), mount with enough clearance from other antennas, including passive antennas such as another GPS antenna. When practical, installers will use 12" center-to-center spacing between antennas. If 12" spacing is not practical, installers will use the maximum center-to-center spacing from adjacent antennas, but never less than 9" center-to-center spacing. Spacing less than 9" center-to-center results in unacceptable GPS/WAAS antenna pattern degradation.
6. To maintain a constant gain pattern and limit degradation by the windscreen, avoid mounting the antenna closer than 3" from the windscreen.
7. For multiple GPS installations, the antennas should not be mounted in a straight line from the front to the rear of the fuselage. Also varying the mounting location will help minimize any aircraft shading by the wings or tail section (in a particular azimuth, when one antenna is blocked the other antenna may have a clear view).

NOTE

When mounting a combination antenna, the recommended distance of two feet or more is not applicable to the distance between the antenna elements in a combination antenna (e.g., GPS and COM, GPS and SiriusXM) provided the combination antenna is TSO approved and has been tested to meet Garmin's minimum performance standards.

4.4.21.2.1.1 GPS Interference

On some installations, VHF COM transceivers, ELT antennas, and DF receiver antennas can re-radiate through the GPS antenna. The COM does not interfere with its own GPS section. However, placement of the GPS antenna relative to a COM transceiver and COM antenna (including the GDU 116C COM antenna), ELT antenna, and DF receiver antenna is critical.

Use the following guidelines when locating the GDU 116( ) and its antennas.

- Locate the GDU 116 as far as possible from all COM antennas.
- Locate GPS antenna as far as possible from all COM antennas and all COM transceivers (including the GDU 116C COM), ELT antennas, and DF receiver antennas to avoid harmonic interference. No closer than two feet from any VHF COM antenna or any other antenna that may emit interference.
- Complete an aircraft EMI check to ensure there is no GPS degradation. Refer to section 6.12.
  - If a COM antenna is found to be radiating, consider the following:
    - Replace or clean VHF COM rack connector to ensure good coax ground.
    - Place a grounding brace between the GDU 116( ), VHF COM, and ground.
    - Shield the VHF COM wiring harness.
  - Alternatively, a GPS notch filter (Garmin P/N 330-00067-00) can be inserted in line with the offending VHF COM or the (re-radiating) ELT transmitter. as close to the transmitter as possible. This filter is not required for the GDU 116C transmitter.
  - Alternatively, a different GPS antenna location can be selected.

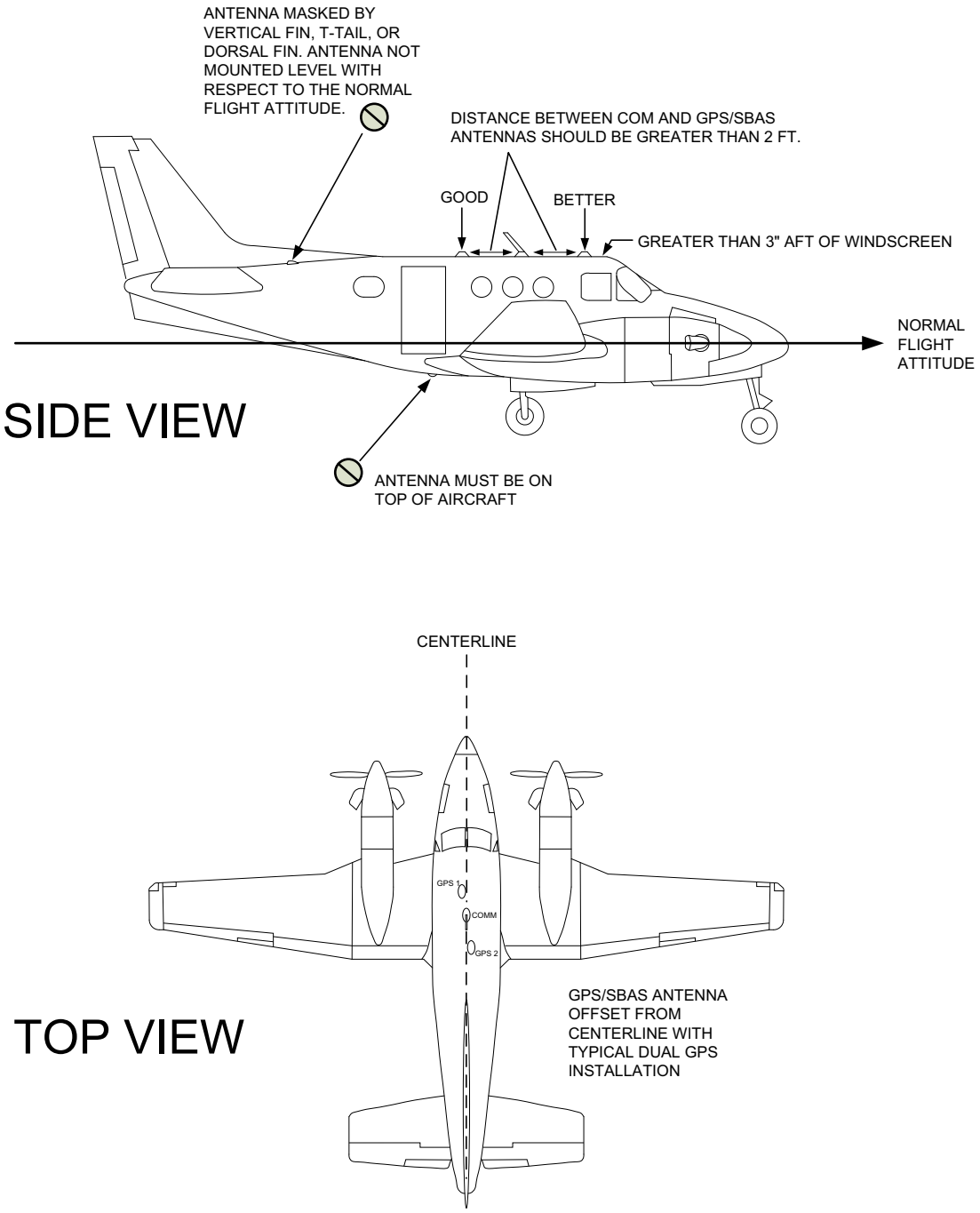

Figure 4-126 GPS/SBAS and COM Antenna Mounting Considerations

4.4.21.2.2 GPS/SBAS Antenna Cable Installation

GPS/SBAS antenna cable loss must be between 1.5 dB and 6.5 dB in order to maintain proper rejection of interference signals. If RG-142B or RG-400 is used, it must be between 6.5 and 35 feet long to meet the cable loss requirement. For longer lengths, use low-loss double or triple-shielded 50 Ω coaxial cable.

It is permissible to temporarily locate the GPS antenna with a coaxial cable connected to the AXIS flight display and check the GPS performance as described in section 6.9.1. Once the antenna mounting position has been established, route the coaxial cable from the antenna to the AXIS flight display. Proper selection of coaxial cable and assembly of connectors is critical to GPS signal performance.

An acceptable connector used to connect the coaxial cable to the GPS/SBAS antenna is listed in table 4-79.

Table 4-79 GPS Antenna TNC Connector

ITEM	AMPHENOL P/N
Connector, TNC, Male, Crimp	31-4452

Additional loss from coaxial connectors and adapters, such as BNC to TNC, should be considered when computing cable loss. A typical loss of 0.2 dB can be used for each connection. To maintain integrity of the SBAS signal, the GPS antenna coaxial cable must have a minimum of two shields (e.g., RG-400 or RG-142B).

For very short runs, where the loss is less than 1.5 dB, additional cable should be used to increase the loss to within 1.5 dB and 6.5 dB. This additional cable may be coiled, taking into account the minimum bend radius of the cable.

4.4.21.2.3 GPS/SBAS Antenna Installation

4.4.21.2.3.1 VFR GPS Antenna Installation

The AXIS display VFR GPS antenna is designed for installation on top of an existing instrument panel glareshield. The selected location must offer good visibility of the sky through the windshield. When installed, the antenna cannot obstruct or limit the pilot's vision, even though the antenna has a low profile. The optimal antenna position is horizontal or as close to horizontal as practical given the shape of the glareshield.

Fastener holes for non-removable antenna installation, as depicted in figure 4-129, must not penetrate through the ventilation or defrost channels built into the glareshield, if present. Additional consideration must be given by the installer for aircraft in which the glareshield is a part of the instrument panel structure.

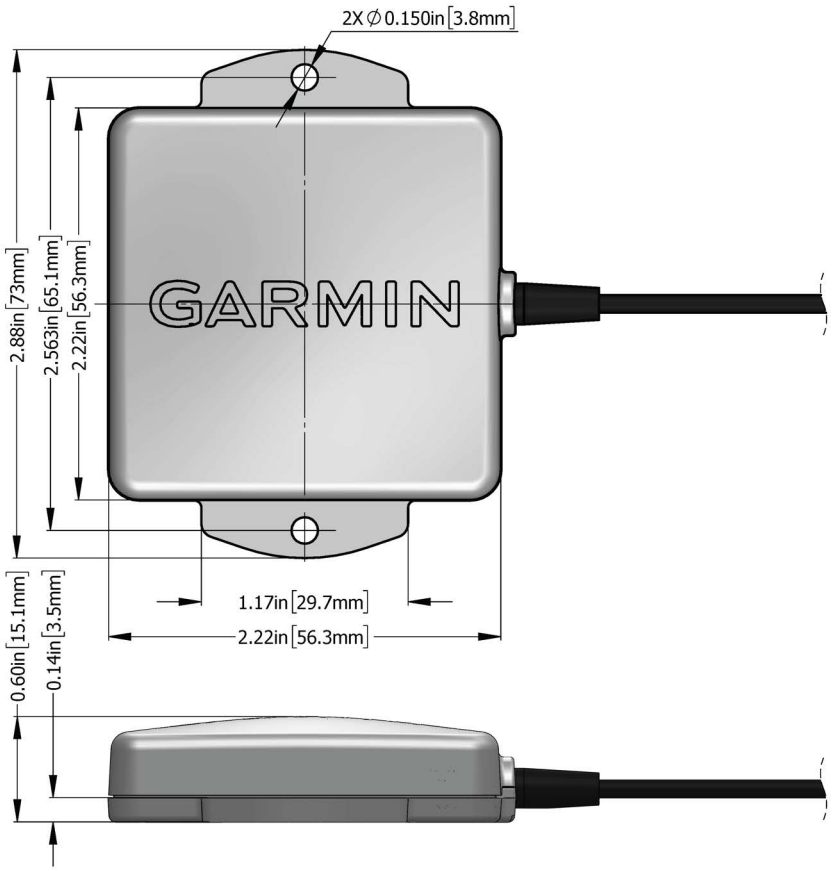

Figure 4-127 VFR GPS Antenna Dimensions

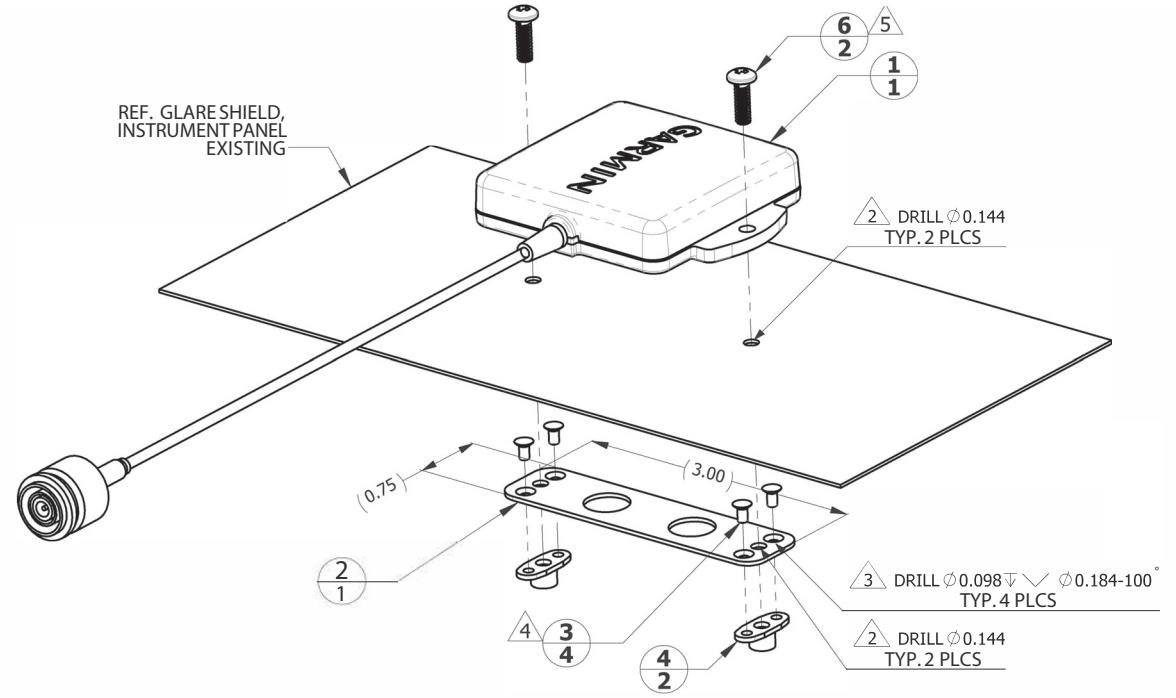

ITEM	DESCRIPTION	P/N	QTY
1	VFR GPS ANTENNA, BNC	011-04036-10	1
2	SHEET, 6061-T6 AL, 0.040 INCH THICK PER AMS 4025, AMS 4027, AMS-QQ-Q-250-11	PLATE DETAIL	1
3	RIVET, SOLID, COUNTERSUNK 100°, PRECISION HEAD, 3/32 IN OD, 3/16 IN LONG	MS20426AD3-3	4
4	NUT, SELF-LOCKING, PLATE, TWO-LUG, REDUCED RIVET SPACING, LOW HEIGHT, STEEL .138-32 UNJC-3B	MS21069L06	2
6	SCREW, MACHINE, PAN-HEAD, CROSS RECESSED, BLACK OXIDE FINISH, .1380-32 UNC-2A, 0.438 IN LONG	MS352140-26	2
	SCREW, MACHINE, PAN-HEAD, CROSS RECESSED, CAD PLATED, .1380-32 UNC-2A, 0.438 IN LONG	MS35206-229	

NOTES

1 DIMENSIONS ARE IN INCHES UNLESS OTHERWISE SPECIFIED.

2 FASTENER HOLES ARE LOCATED TO MATCH BACKUP GPS ANTENNA ITEM 1.

3 FASTERNER HOLES ARE LOCATED TO MATCH NUTPLATE ITEM 4.

4 RIVETS ARE INSTALLED PER MIL-R-47196 (NASM47196) RIVET, BUCK TYPE, PREPARATION FOR AND INSTALLATION, OR PER MIL-STD-403 *PREPARATION FOR AND INSTALLATION OF RIVETS AND SCREWS, ROCKET MISSILE, AND AIRFRAME STRUCTURES.*

5 USE FASTENER WITH BLACK OXIDE FINISH IF ANTENNA LOCATION IS SUCH THAT FASTENERS ARE VISIBLE TO THE PILOT OR COPILOT AND MIGHT BECOME A SOURCE OF ACCIDENTAL GLARE. TORQUE .1380-32 UNC-2A SCREWS HAND TIGHT.

Figure 4-128 VFR GPS Antenna Installation (Screw Installation Example)

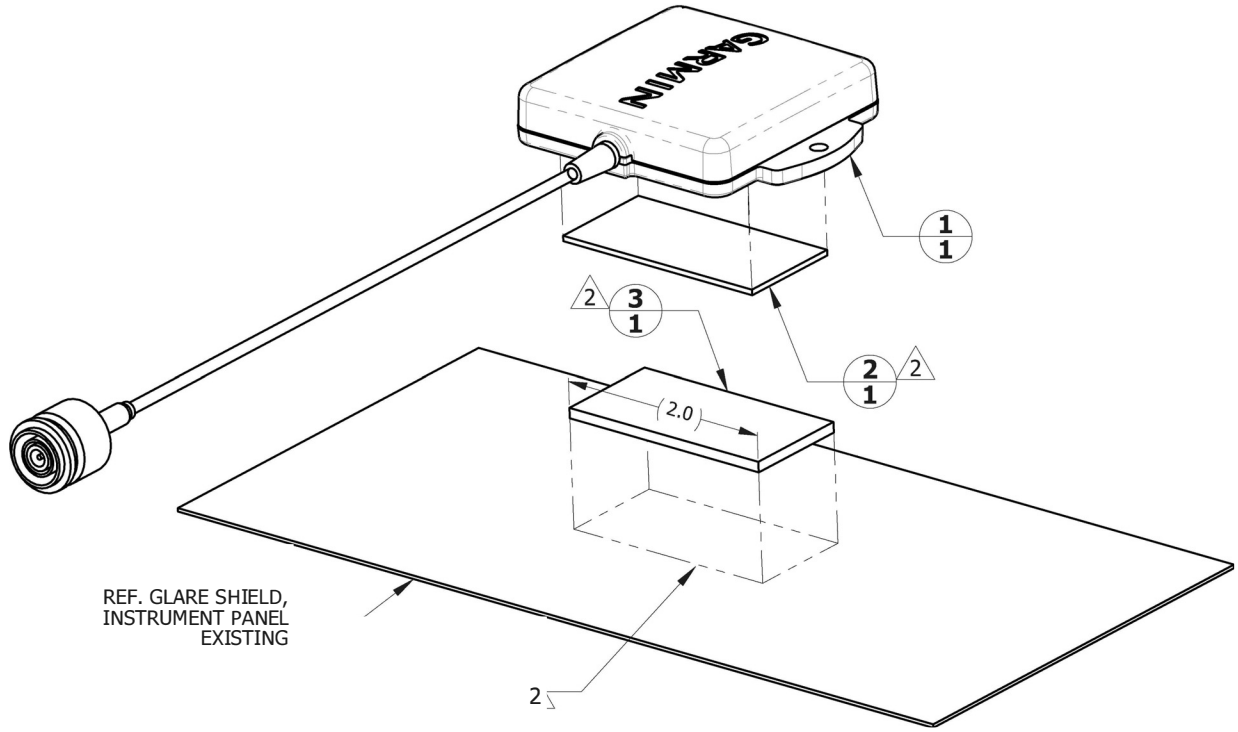

ITEM	DESCRIPTION	P/N	QTY
1	VFR GPS ANTENNA, BNC	011-04036-10	1
2	FASTENER TAPE, SYNTHETIC, ADHESIVE BACKED, A-A-55126 CLASS 1/2, TYPE 1, LOOP 1.0 INCH WIDE	A-S-55126	1
3	FASTENER TAPE, SYNTHETIC, ADHESIVE BACKED, A-A-55126 CLASS 1/2, TYPE 1, HOOK 1.0 INCH WIDE		

NOTES

1 DIMENSIONS ARE IN INCHES UNLESS OTHERWISE SPECIFIED.

2 PEEL OFF ADHESIVE PROTECTING FILM AND PRESS THE FASTENER TAPE IN TO BOND. SURFACES MUST BE CLEAN AND FREE FROM OIL OR OTHER CONTAMINANTS. LOOP FASTENER IS BONDED TO GLARE SHIELD AND HOOK FASTENER IS BONDED TO ANTENNA. TAPE FASTENER MUST BE 2.0 INCHES OR LONGER.

Figure 4-129 VFR GPS Antenna Installation (Hook and Loop Installation Example)

4.4.21.2.3.2 Garmin SBAS GPS Antenna Installation

NOTE

Due to the excessive temperature environment and large areas of signal blockage caused by the fuselage, mounting the antenna under the engine cowling (forward of the firewall) is not recommended and likely will not provide adequate GPS reception.

4.4.21.2.3.2.1 Antenna Doubler/Backing Plate

CAUTION

Never weaken the aircraft structure when choosing a mounting area.

The installation of an antenna doubler is essential to maintain structural integrity of the antenna installation. When penetrating the skin with a large hole (i.e., for the coax connector) a doubler plate is required to re-instate the integrity of the aircraft skin.

Some aircraft may have existing provisions for an antenna, such as a doubler (permanently attached to the skin) or backing plate (removable).

If the aircraft is not equipped with antenna mounting provisions, refer to AC 43.13-2( ) for guidance on manufacturing and installing doublers.

4.4.21.2.3.2.2 Antenna Grounding Plane

For optimum antenna performance, a metallic ground plane or skin sized at least 7.5 or 4.0 inches beyond the perimeter of the antenna is required. If ground plane is added to the aircraft, round its edges to be as circular as practical for best performance.

To use an antenna in aircraft with fabric or composite skin, a ground plane is recommended. It is usually installed under the skin of the aircraft, below the antenna, and is made of either aluminum sheet or of wire mesh.

Table 4-80 Ground Plane Requirements

	Antenna Model					
	GA 35	GA 35S	GA 36	GA 37	GA 55	GA 55A
Antenna Ground Plane Perimeter (inches beyond perimeter of antenna)	7.5	7.5	7.5	7.5	4.0	4.0

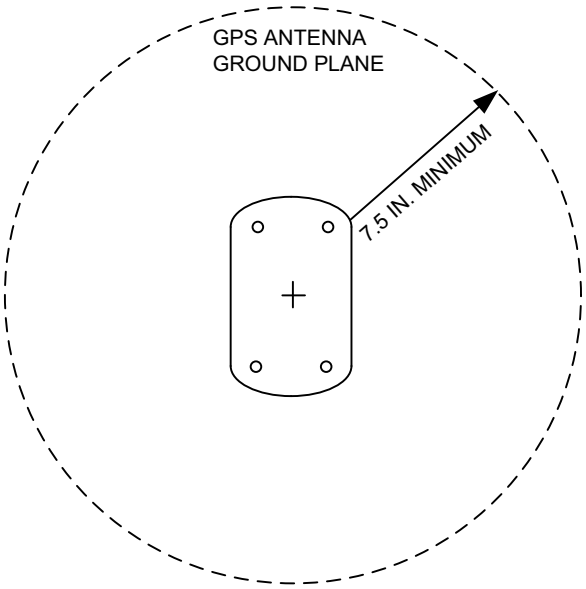

Figure 4-130 GPS/WAAS Antenna Minimum Ground Plane Radius

NOTE

For GA 57X installations a conductive ground plane surface of 12" diameter minimum is required.

4.4.21.2.3.2.3 Antenna Grounding

The antenna is grounded through the mounting hardware and the coax connection. The mounting hardware (washers and nuts) and doubler plate should make contact with an unpainted grounded surface to provide proper antenna grounding. It is important to have good conductivity between the coaxial shield and the ground plane. The bottom of the antenna does not need to make contact with the ground plane (i.e., the surface may be painted).

4.4.21.2.3.2.4 Connector Clearance (GA 57X only)

A clearance of 0.25" around the TNC connectors of the GA 57X and mating connectors is required for proper operation. For pressurized aircraft, ensure that the expanded interior shell does not interfere with the antenna connections.

4.4.21.2.3.2.5 Antenna Installation Procedure

4.4.21.2.3.2.5.1 Teardrop Footprint Antenna Installation (GA 35, GA 55, and GA 56)

This section describes the structural mounting of the teardrop footprint antenna installation.

An acceptable installation method is to use P/N 115-00846-10 doubler plate with the GA 35 through-hole, or GA 55/GA 56 stud mount antennas. Another acceptable method is to fabricate and install one of three doublers (figure 4-131, figure 4-132, and figure 4-133), depending on the thickness of the skin.

The three doubler designs vary only by number of rivets and hole preparation for installation with flush rivets. Table 4-79 provides a summary of design and installation details for selecting the appropriate antenna doubler/backplate.

Figure 4-134 shows an example of the doubler installed between stringers on the top fuselage skin, just off centerline. The location should be flat, with no gaps between the skin and doubler, to keep from deforming the skin during installation.

Table 4-81 Teardrop Footprint Antenna Doubler Design and Installation

Aircraft Skin Thickness	0.032" to 0.049"	0.049" to 0.051"	0.051" to 0.063"
Double Design (Figure)	Figure 4-131	Figure 4-132	Figure 4-133
Number of Rivets Required	12	16	16
Type of Rivets Required [1]	MS20426AD4-x	MS20426AD4-x	MS20426AD4-x
Skin Preparation for Rivets	Dimple	Dimple	Countersink
Doubler Preparation for Rivets	Countersink	Countersink	None
Skin Cutout Detail (Figure)	Figure 4-135	Figure 4-136	Figure 4-137
Doubler Installation (Figure)	Figure 4-138	Figure 4-139	Figure 4-140

[1] Rivet length determined at installation, dependent on thickness of material (rivet length = grip length + 1.5 * rivet diameter)

Refer to section 4.4.21.2.3.2.5.4 for antenna installation drawings.

4.4.21.2.3.2.5.2 Preparation of Doubler

1. Use P/N 115-00846-10, or refer to table 4-81 for guidance on selecting the appropriate doubler drawing based on the thickness of skin at the antenna location. Make the doubler from 2024-T3 Aluminum (AMS-QQ-A-250/5), 0.063" sheet thickness.
2. For installation in aircraft skins of thickness less than 0.051", countersink the rivet holes in the doubler for use with flush head rivets (MS20426AD4-x).

When using P/N 115-00846-10 doubler, sixteen rivet holes exist in the part. For installation of P/N 115-00846-10 in skins of thickness between 0.032" and 0.049", only the rivets identified for use through the skin cutout detail (figure 4-135) and doubler installation (figure 4-138) are required.

4.4.21.2.3.2.5.3 Teardrop Antenna Installation Instructions

1. Refer to table 4-81 and the outline and installation drawings in section 4.4.21.2.3.2.5.3 for installation guidance and selecting the appropriate mounting cutout. Drill or punch the holes to match the mating part (doubler).
2. Install a doubler plate to reinforce the aircraft skin, as required. Refer to section 4.4.21.2.3.2.5.2 for doubler preparation and figure 4-139 for additional guidance on the doubler installation. Dimple aircraft skin when the skin thickness is less than 0.051" for installation of flush head rivets. Countersink aircraft skin when the skin thickness is between 0.051" and 0.063" for installation of flush head rivets.
3. For the GA 35, secure the O-ring in the O-ring groove on the underside of the antenna. Place the antenna over the mounting holes, using the four screw holes to align the antenna and insert the supplied four screws.

CAUTION

GA 35 serial numbers below 110000 required screws with 80 degree countersink angle and most aviation fasteners (AN509) are NOT compatible. Serial numbers 110000 and higher, AN509 hardware is compatible. Antennas installed with incompatible hardware or screws that have been over tightened will void antenna warranty.

4. For a stud mount teardrop footprint antenna, place the install gasket on top of aircraft skin using the four screw holes to align the gasket (Figure 21-35, Figure 21-37).
5. Washers and locking nuts (not provided) are required to secure the antenna. Torque the four #8-32 stainless steel locking nuts 12-15 in-lbs. Torque should be applied evenly across all mounting studs or screws to avoid deformation of the mounting area.
6. Make sure the antenna base and aircraft skin are in continuous contact with the gasket or o-ring, as appropriate to the antenna model.
7. Seal the antenna and gasket to the fuselage using Dow Corning 738 Electrical Sealant or equivalent. Run a bead of the sealant along the edge of the antenna where it meets the exterior aircraft skin. Use caution to make sure the antenna connectors are not contaminated with sealant.

CAUTION

Do not use construction grade RTV sealant or sealants containing acetic acid. These sealants may damage the electrical connections to the antenna. Use of these type sealants may void the antenna warranty.

4.4.21.2.3.2.5.4 Reference Figures

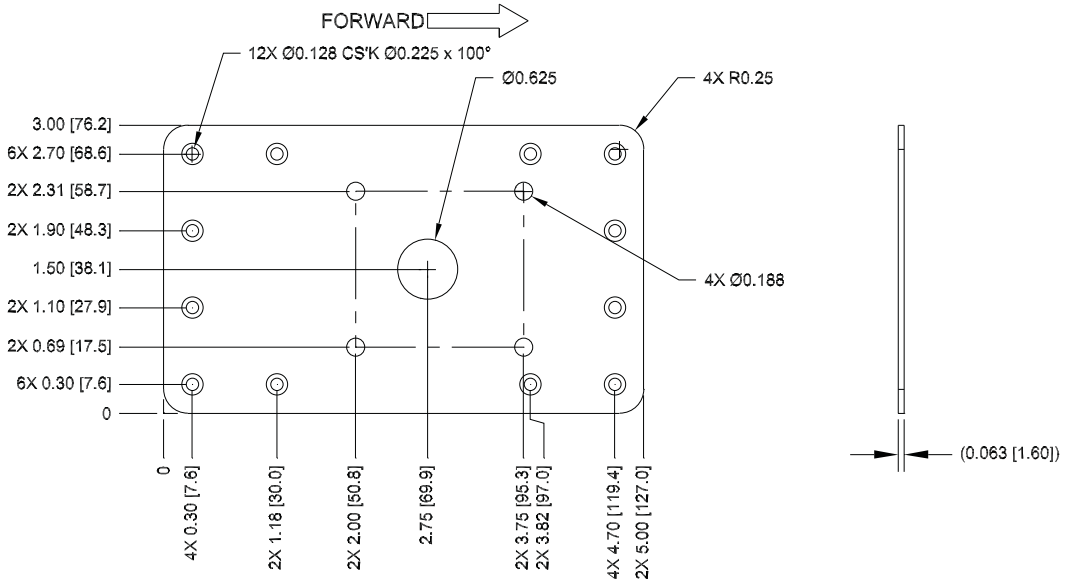

NOTES:
1. DIMENSIONS: INCHES
2. MATERIAL: 0.063" THICKNESS 2024-T3 ALUMINUM (AMS-QQ-A-250/5)
3. TOLERANCE: .XX +/- 0.030", .XXX +/- 0.010"
4. REMOVE BURRS AND BREAK SHARP EDGES

Figure 4-131 Doubler Design, Teardrop Footprint Antenna Skin Thickness 0.032" to 0.049"

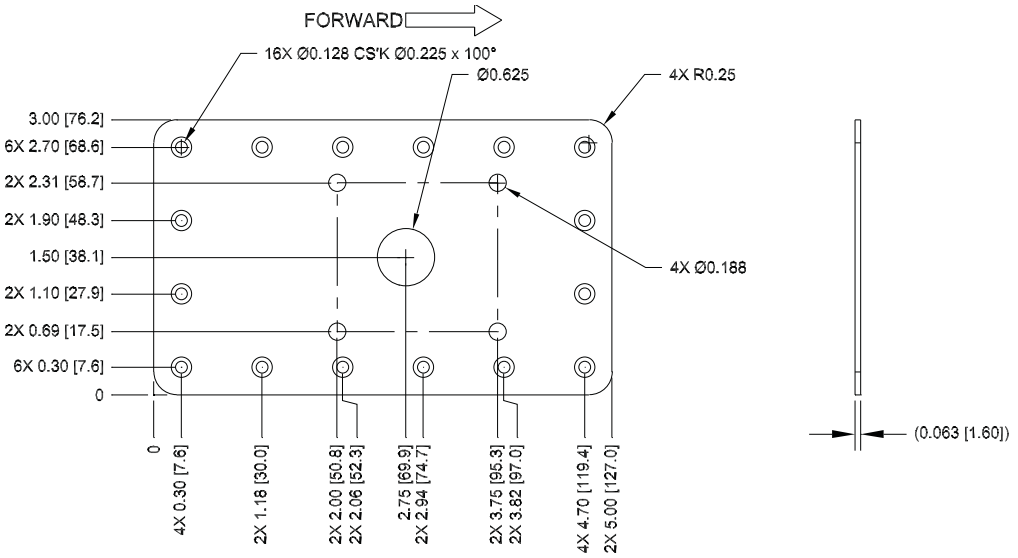

NOTES:
1. DIMENSIONS: INCHES
2. MATERIAL: 0.063" THICKNESS 2024-T3 ALUMINUM (AMS-QQ-A-250/5)
3. TOLERANCE: .XX +/- 0.030", .XXX +/- 0.010"
4. REMOVE BURRS AND BREAK SHARP EDGES

Figure 4-132 Doubler Design, Teardrop Footprint Antenna Skin Thickness 0.049" to 0.051"

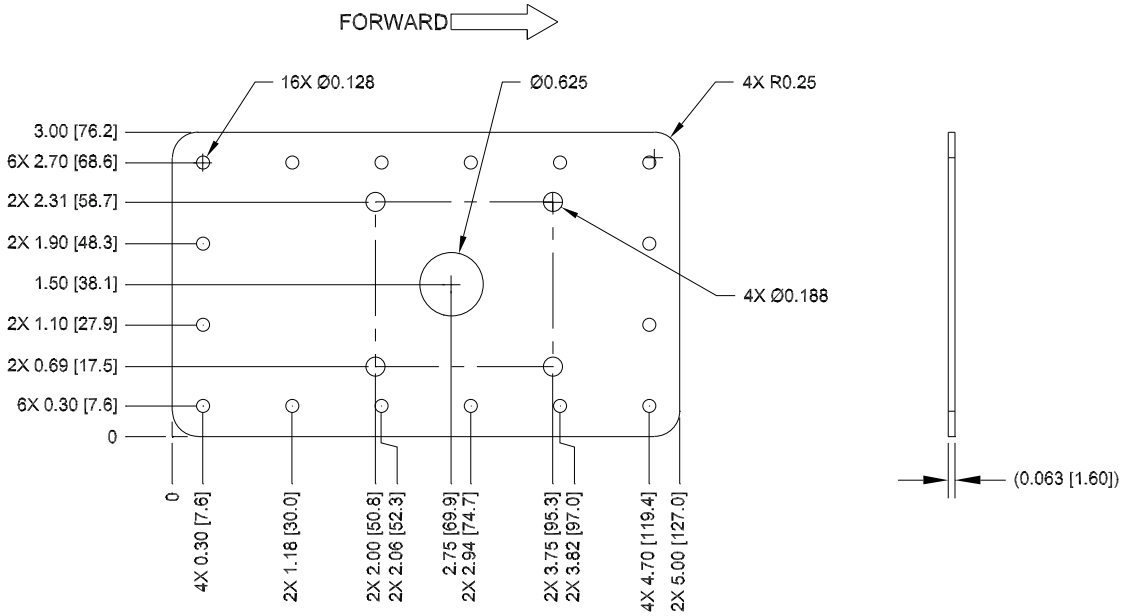

NOTES:
1. DIMENSIONS: INCHES
2. MATERIAL: 0.063" THICKNESS 2024-T3 ALUMINUM (AMS-QQ-A-250/5)
3. TOLERANCE: .XX +/- 0.030", .XXX +/- 0.010"
4. REMOVE BURRS AND BREAK SHARP EDGES

Figure 4-133 Doubler Design, Teardrop Footprint Antenna, Skin Thickness 0.051" to 0.063"

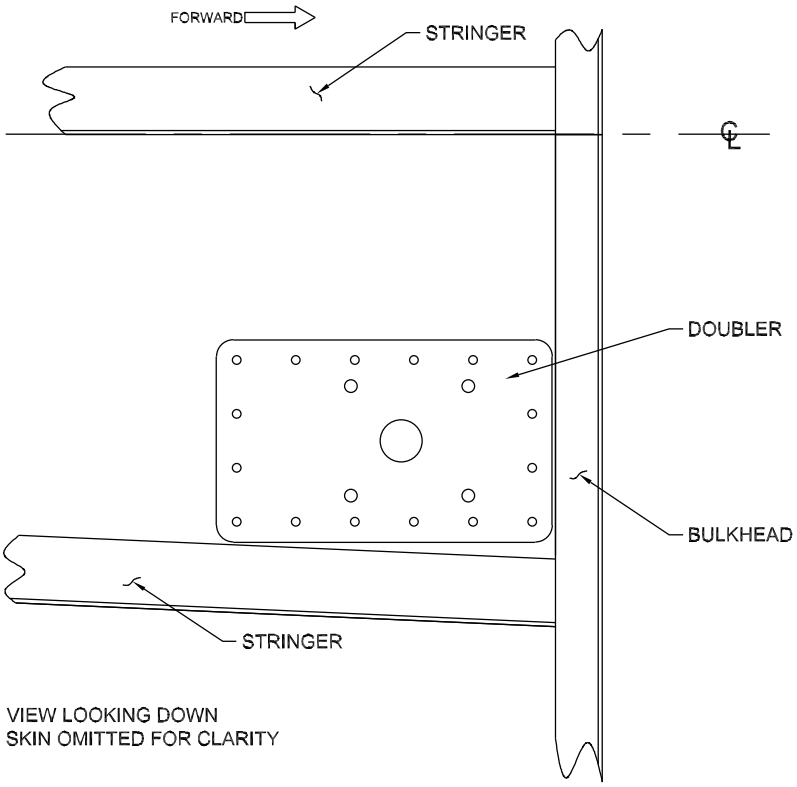

Figure 4-134 Sample Doubler Location, Teardrop Footprint Antenna, Metal Skin Aircraft

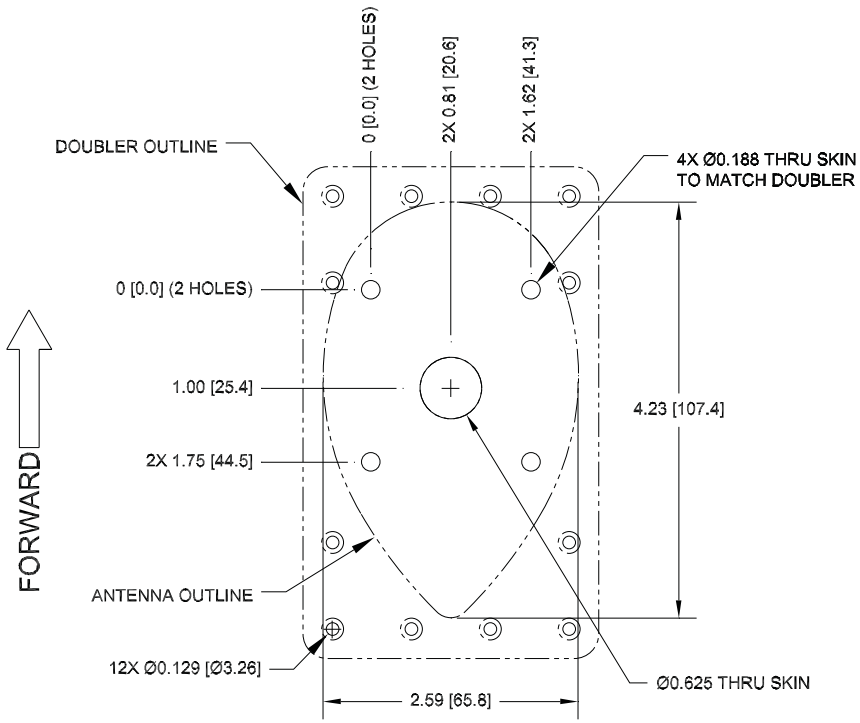

NOTES:
1. DIMENSIONS: INCHES [mm]
2. DIMPLE SKIN FOR INSTALLATION OF FLUSH HEAD RIVETS.

Figure 4-135 Skin Cutout Detail, Teardrop Footprint Antenna, Skin Thickness 0.032" to 0.049"

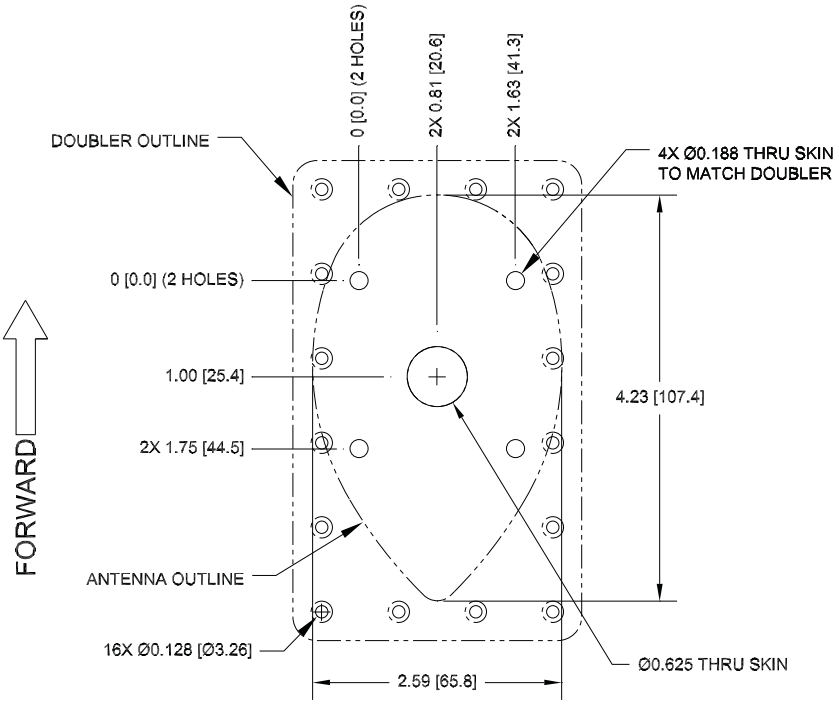

NOTES:
1. DIMENSIONS: INCHES [mm]
2. DIMPLE SKIN FOR INSTALLATION OF FLUSH HEAD RIVETS.

Figure 4-136 Skin Cutout Detail, Teardrop Footprint Antenna, Skin Thickness 0.049" to 0.051"

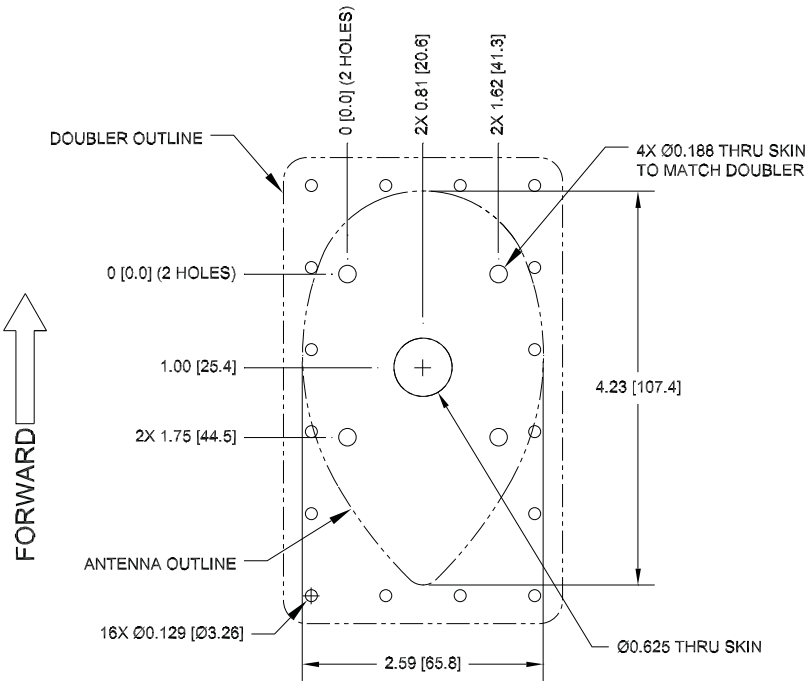

NOTES:
1. DIMENSIONS: INCHES [mm]
2. COUNTERSINK EXTERNAL AIRCRAFT SKIN FOR INSTALLATION OF FLUSH HEAD RIVETS.

Figure 4-137 Skin Cutout Detail, Teardrop Footprint Antenna, Skin Thickness 0.051" to 0.063"

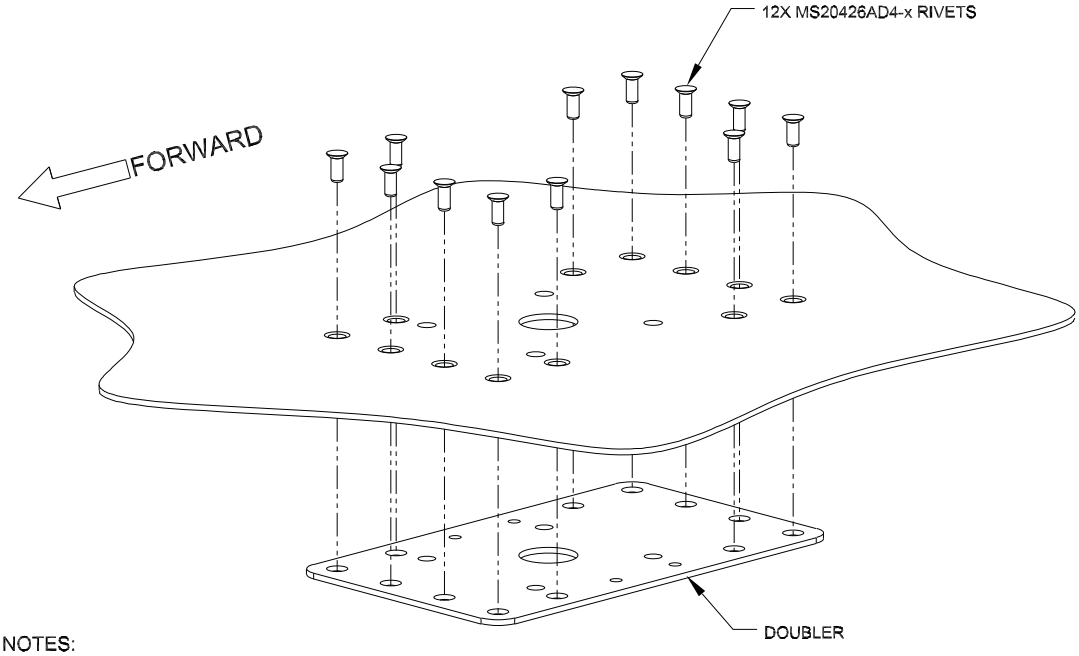

NOTES:
1. MS20426AD4-X RIVET SELECTION (LENGTH) AND INSTALLATION DETERMINED USING THE GUIDANCE FOUND IN AC43.13-1B.

Figure 4-138 Doubler Installation, Teardrop Footprint Antenna, Skin Thickness 0.032" to 0.049"

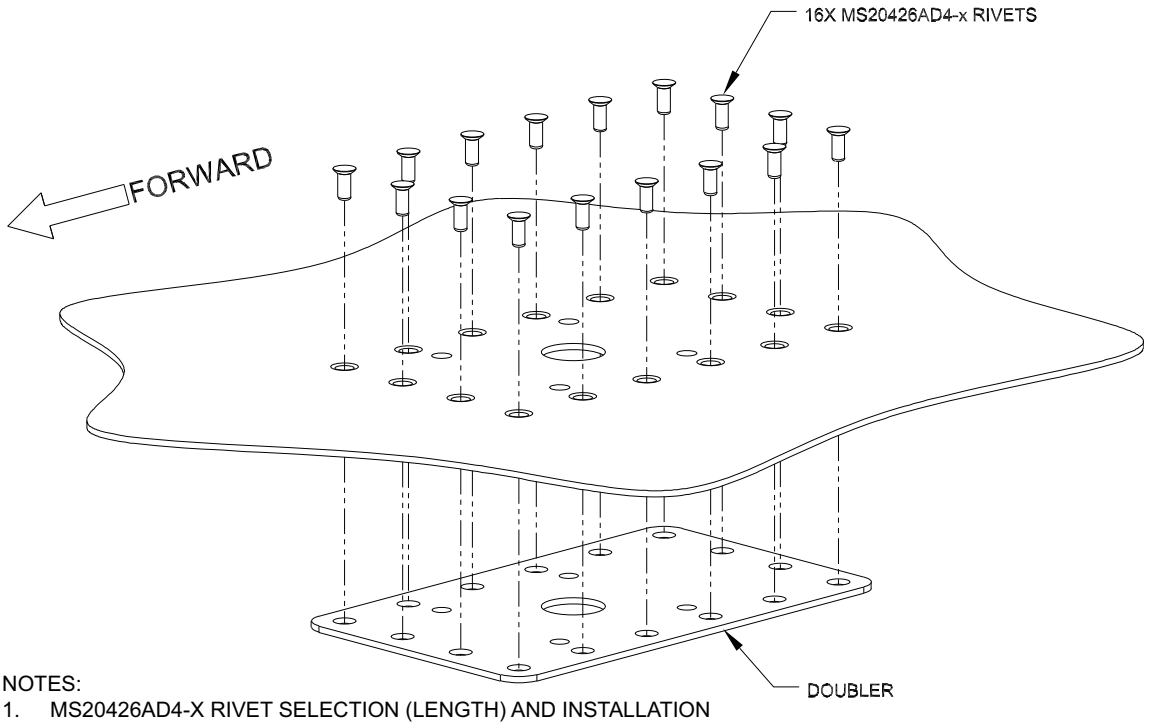

NOTES:
1. MS20426AD4-X RIVET SELECTION (LENGTH) AND INSTALLATION DETERMINED USING THE GUIDANCE FOUND IN AC43.13-B

Figure 4-139 Doubler Installation, Teardrop Footprint Antenna, Skin Thickness 0.049" to 0.051"

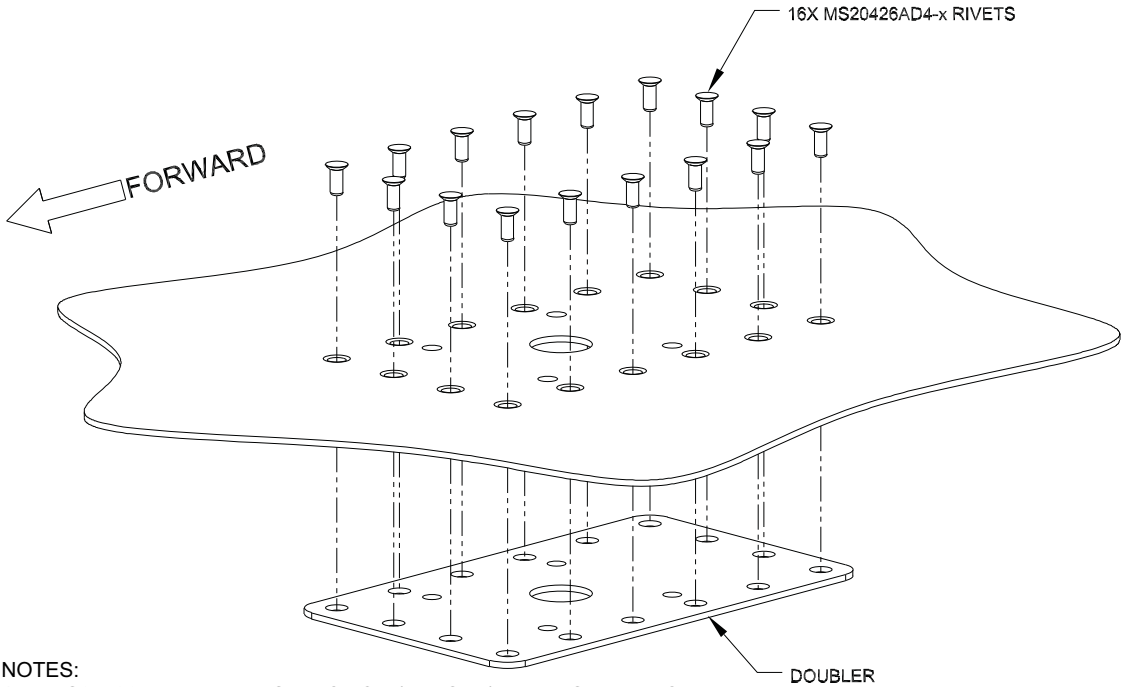

NOTES:
1. MS20426AD4-X RIVET SELECTION (LENGTH) AND INSTALLATION DETERMINED USING THE GUIDANCE FOUND IN AC43.13-B

Figure 4-140 Doubler Installation, Teardrop Footprint Antenna, Skin Thickness 0.051" to 0.063"

4.4.21.2.3.2.5.5 ARINC 743 Footprint Antenna Installation (GA 36, GA 37, GA 55A, GA 57X)

This section describes the structural mounting of the ARINC 743 footprint antenna installation. One acceptable method is to use P/N 115-00846-00 doubler plate. Another acceptable method is to fabricate and install one of three doublers, figure 4-141, figure 4-142, or figure 4-143, depending on the thickness of the skin. The three doubler designs vary only by number of rivets and hole preparation for installation with flush rivets. Figure 4-151 shows installation of the ARINC 743 footprint antenna.

Table 4-82 provides a summary of design and installation details for the antenna doubler. Figure 4-144 shows an example of the doubler installed between stringers on the top fuselage skin, just off centerline. The location should be flat, with no gaps between the skin and doubler, to keep from deforming the skin during installation.

Table 4-82 ARINC 743 Footprint Antenna Doubler Design and Installation

Aircraft Skin Thickness	0.032" to 0.049"	0.049" to 0.051"	0.051" to 0.063"
Double Design (Figure)	Figure 4-141	Figure 4-142	Figure 4-143
Number of Rivets Required	12	16	16
Type of Rivets Required [1]	MS20426AD4-x	MS20426AD4-x	MS20426AD4-x
Skin Preparation for Rivets	Dimple	Dimple	Countersink
Doubler Preparation for Rivets	Countersink	Countersink	None
Skin Cutout Detail (Figure)	Figure 4-145	Figure 4-146	Figure 4-147
Doubler Installation (Figure)	Figure 4-148	Figure 4-149	Figure 4-150

[1] Rivet length determined at installation, dependent on thickness of material (rivet length = grip length + 1.5 * rivet diameter)

4.4.21.2.3.2.5.6 Preparation of Doubler

Use P/N 115-00846-00, or refer to table 4-82 for guidance on selecting the appropriate doubler drawing based on the thickness of skin at the antenna location. Make the doubler from 2024-T3 Aluminum (AMS-QQ-A-250/5), 0.063” sheet thickness.

For installation in aircraft skins of thickness less than 0.051", countersink the rivet holes in the doubler for use with flush head rivets (MS20426AD4-x).

When using P/N 115-00846-00 doubler, sixteen rivet holes exist in the part. For installation of P/N 115-00846-00 in skins of thickness between 0.032" and 0.049", only the rivets identified for use through the skin cutout detail (figure 4-145) and doubler installation (figure 4-148) are required.

4.4.21.2.3.2.5.7 ARINC 743 Antenna Installation Instructions

1. Refer to table 4-82 and the outline and installation drawings in section 4.4.21.2.3.2.5.9 for installation guidance and selecting the appropriate mounting cutout. Drill or punch the holes to match the mating part (doubler).
2. Install a doubler plate to reinforce the aircraft skin, as required. Refer to section 4.4.21.2.3.2.5.6 for doubler preparation and table 4-82 for additional guidance on the doubler installation. Dimple aircraft skin when the skin thickness is less than 0.051” for installation of flush head rivets. Countersink aircraft skin when the skin thickness is between 0.051” and 0.063” for installation of flush head rivets.
3. Secure the O-ring in the O-ring groove (if applicable, per figure 4-153, figure 4-154) on the underside of the antenna.
4. Place the install gasket (if applicable, per figure 4-156 or figure 4-157) on top of aircraft skin using the four screw holes to align the gasket.
5. Locking nuts and washers (not provided) are required to secure the GA 36 and GA 37 per figure 4-153, figure 4-154 (or may use locking nuts installed on doubler plate, if applicable). GA 55A (figure 4-156) and GA 57X (figure 4-158) use locking nuts installed on doubler plate. Torque the four supplied #10-32 stainless steel screws (Garmin P/N: 211-60212-20, MS51958-67, or equivalent) 20-25 in-lbs. Torque should be applied evenly across all mounting studs to avoid deformation of the mounting area.
6. Make sure the antenna base and aircraft skin are in continuous contact with the gasket (if applicable).
7. Seal the antenna and gasket to the fuselage using Dow Corning 738 Electrical Sealant or equivalent. Run a bead of the sealant along the edge of the antenna where it meets the exterior aircraft skin. Use caution to make sure the antenna connectors are not contaminated with sealant.

CAUTION

Do not use construction grade RTV sealant or sealants containing acetic acid. These sealants may damage the electrical connections to the antenna. Use of these type sealants may void the antenna warranty.

4.4.21.2.3.2.5.8 Reference Figures

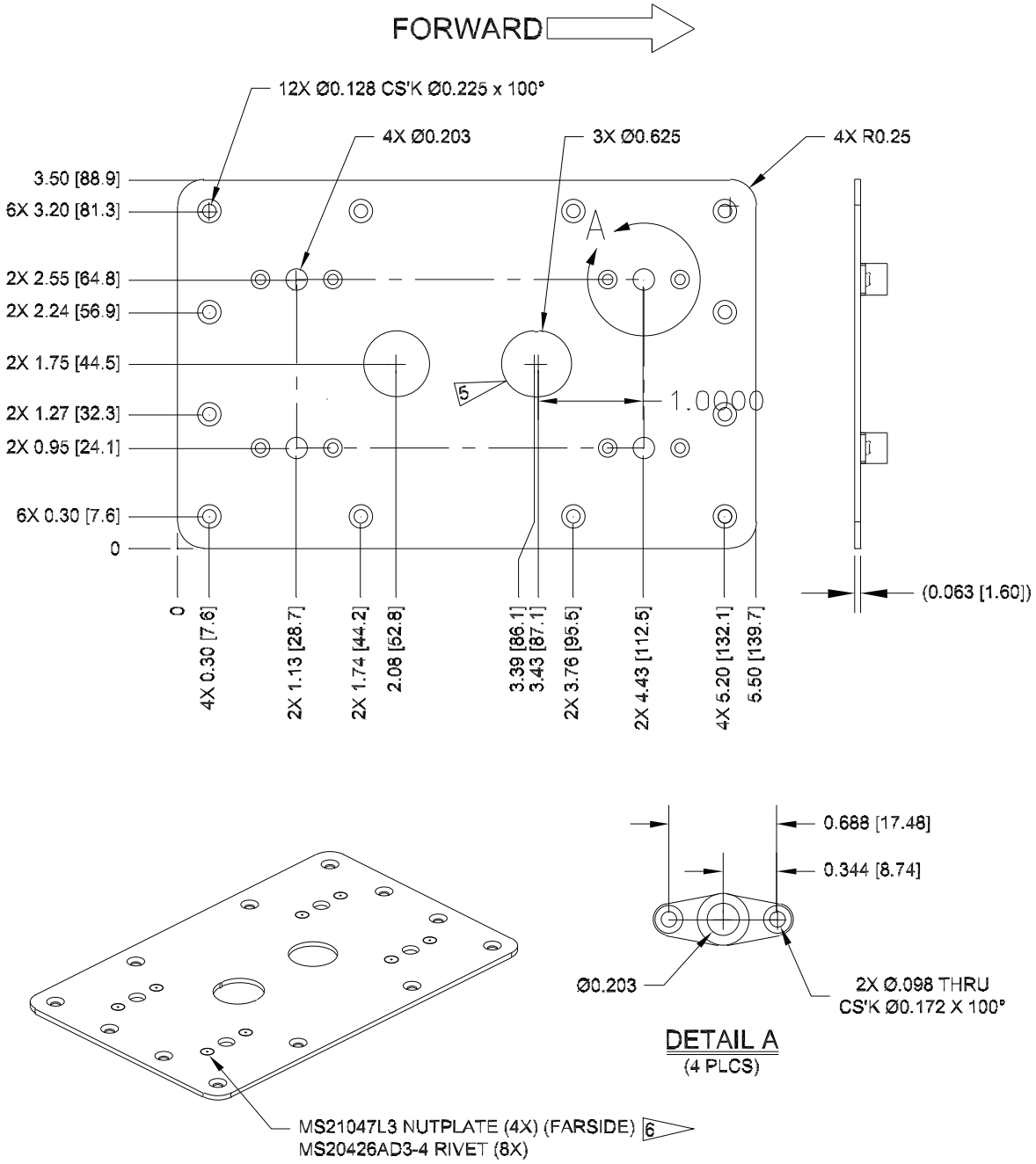

NOTES:
1. DIMENSIONS: INCHES [mm]
2. MATERIAL: 0.063" THICKNESS 2024-T3 ALUMINUM (AMS-QQ-A-250/5)
3. TOLERANCE: .XX +/- 0.030", .XXX +/- 0.010"
4. REMOVE BURRS AND BREAK SHARP EDGES
5. HOLE OPTIONAL, GA55A ANTENNA INSTALLATION
6. MS21059L3 MAY BE USED IN PLACE OF MS21047L3.

Figure 4-141 Doubler Design, ARINC 743 Footprint Antenna, Skin Thickness 0.032" to 0.049"

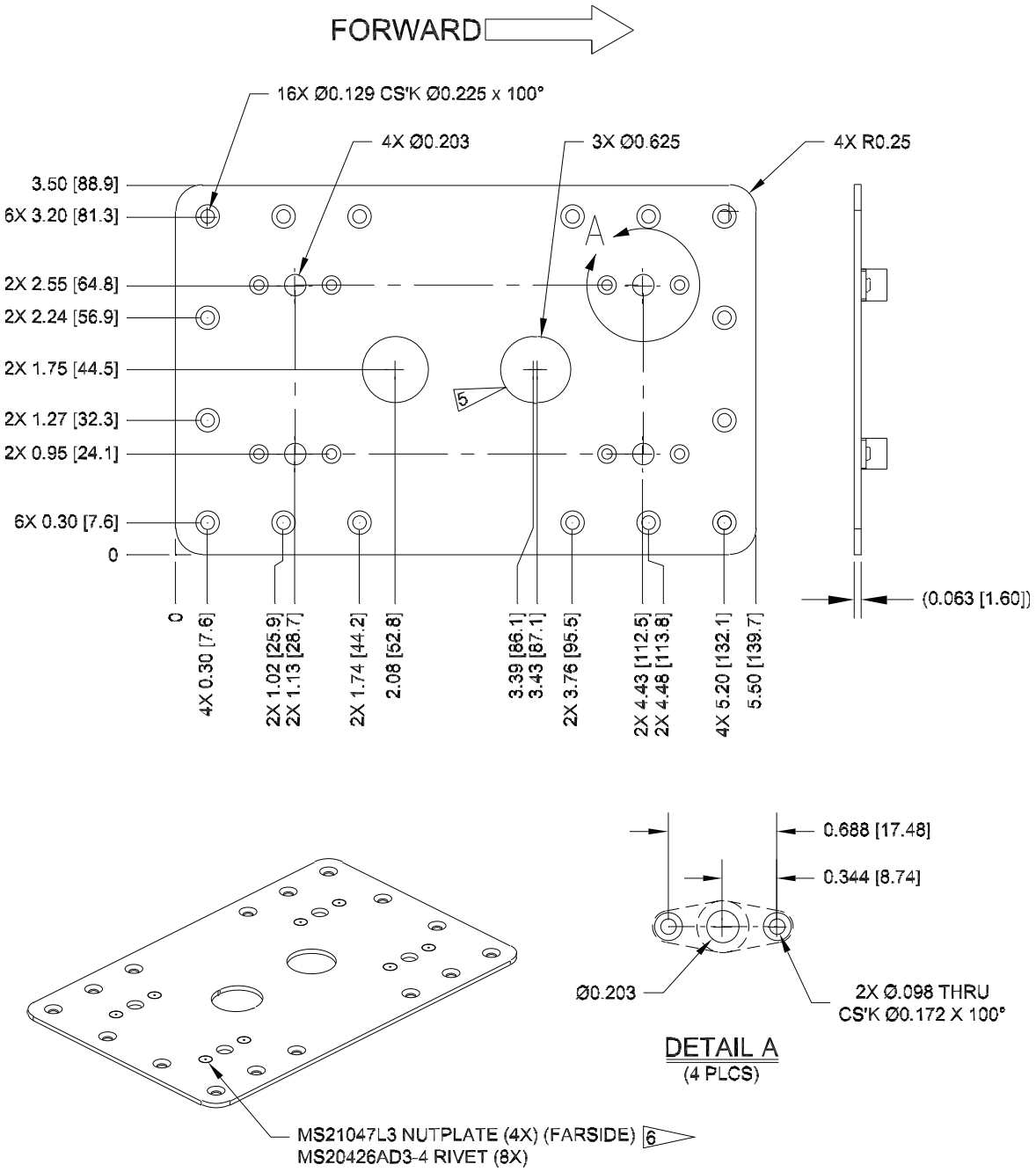

NOTES:
1. DIMENSIONS: INCHES [mm]
2. MATERIAL: 0.063" THICKNESS 2024-T3 ALUMINUM (AMS-QQ-A-250/5)
3. TOLERANCE: .XX +/- 0.030", .XXX +/- 0.010"
4. REMOVE BURRS AND BREAK SHARP EDGES
5. HOLE OPTIONAL. GA55A ANTENNA INSTALLATION
6. MS21059L3 MAY BE USED IN PLACE OF MS21047L3.

Figure 4-142 Doubler Design, ARINC 743 Footprint Antenna, Skin Thickness 0.049" to 0.051"

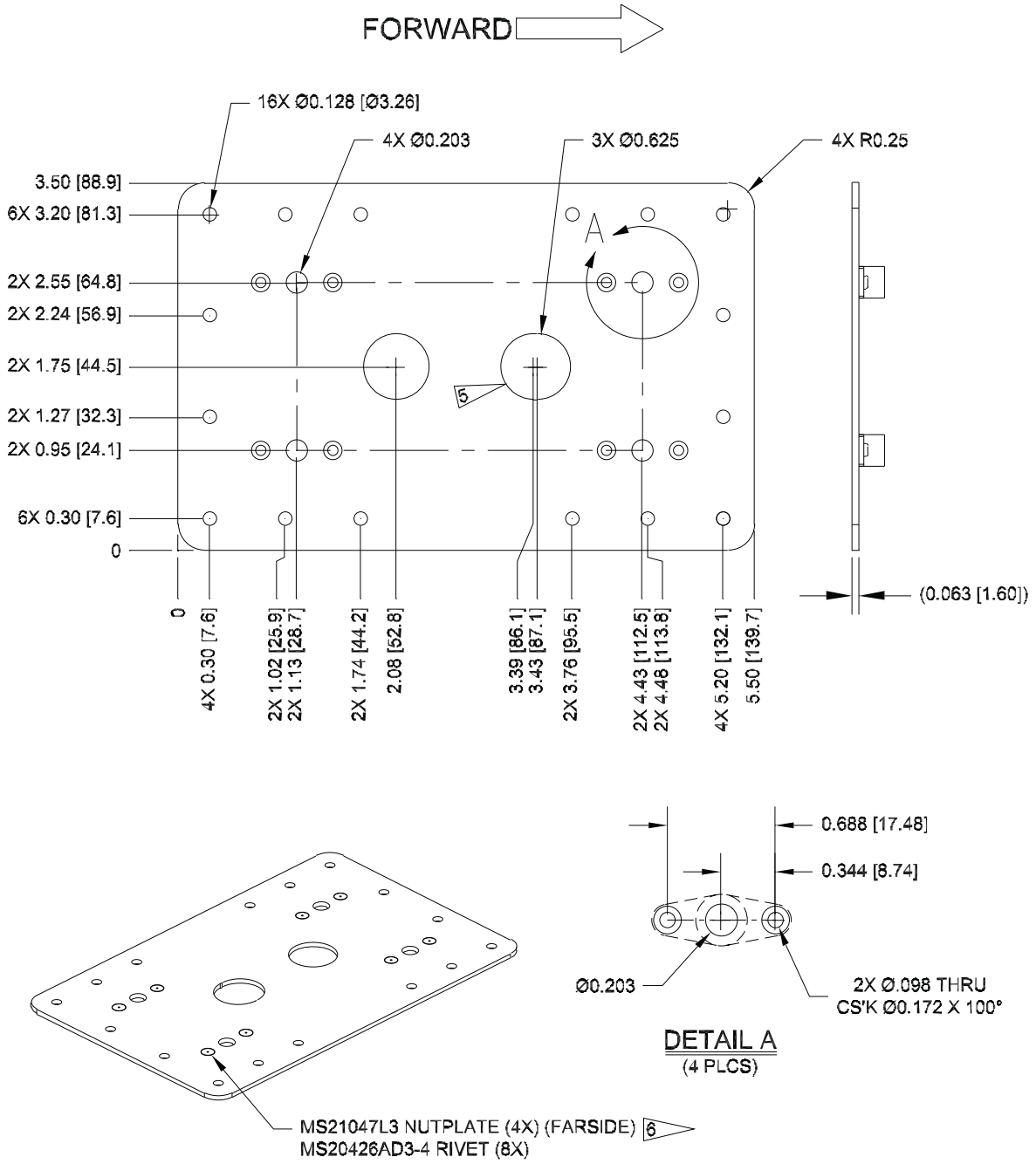

NOTES:
1. DIMENSIONS: INCHES [mm]
2. MATERIAL: 0.063" THICKNESS 2024-T3 ALUMINUM (AMS-QQ-A-250/5)
3. TOLERANCE: .XX +/- 0.030", .XXX +/- 0.010"
4. REMOVE BURRS AND BREAK SHARP EDGES
5. HOLE OPTIONAL, GA55A ANTENNA INSTALLATION
6. MS21059L3 MAY BE USED IN PLACE OF MS21047L3.

Figure 4-143 Doubler Design, ARINC 743 Footprint Antenna, Skin Thickness 0.051" to 0.063"

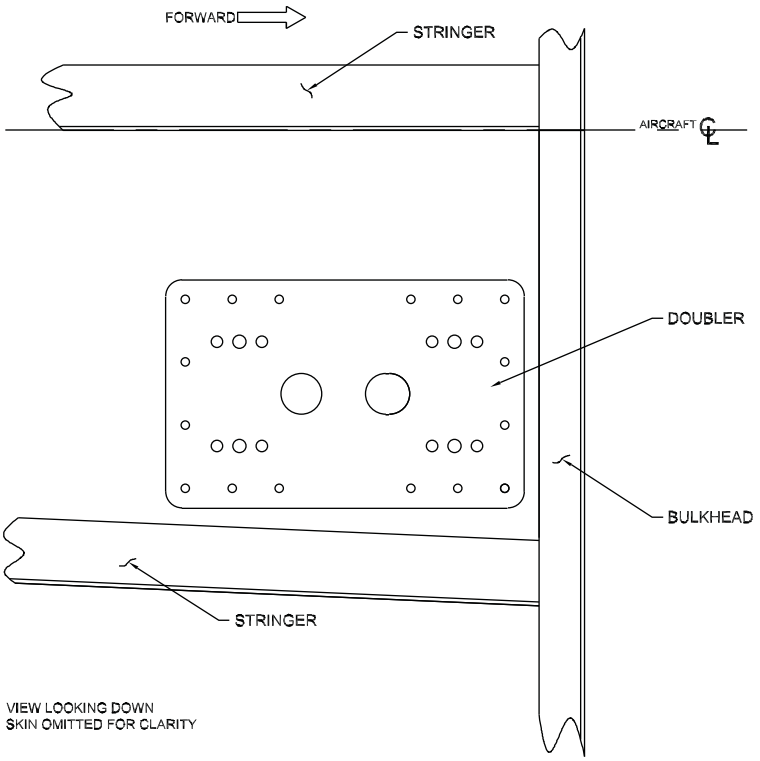

Figure 4-144 Sample Doubler Location, ARINC 743 Antenna, Metal Skin Aircraft

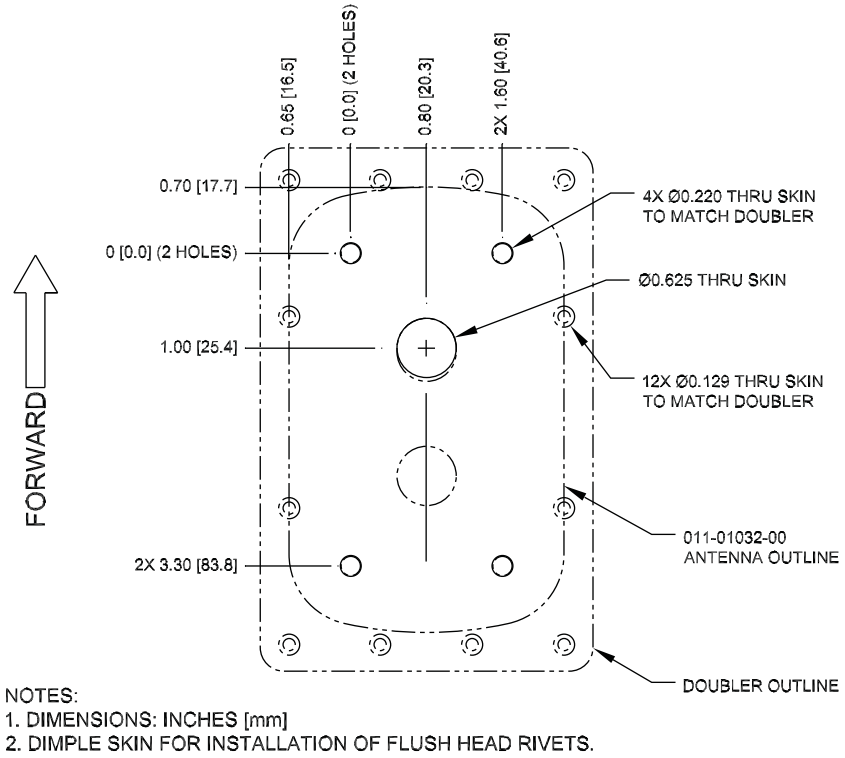

Figure 4-145 Skin Cutout Detail, ARINC 743 Footprint Antenna, Skin Thickness 0.032" to 0.049"

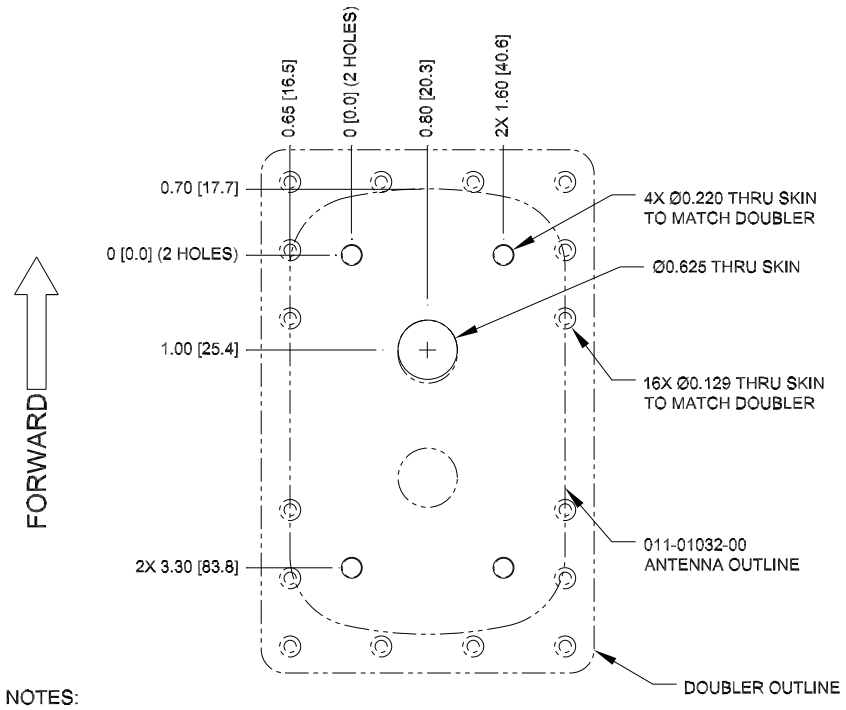

NOTES:
1. DIMENSIONS: INCHES [mm]
2. DIMPLE SKIN FOR INSTALLATION OF FLUSH HEAD RIVETS.

Figure 4-146 Skin Cutout Detail, ARINC 743 Footprint Antenna, Skin Thickness 0.049" to 0.051"

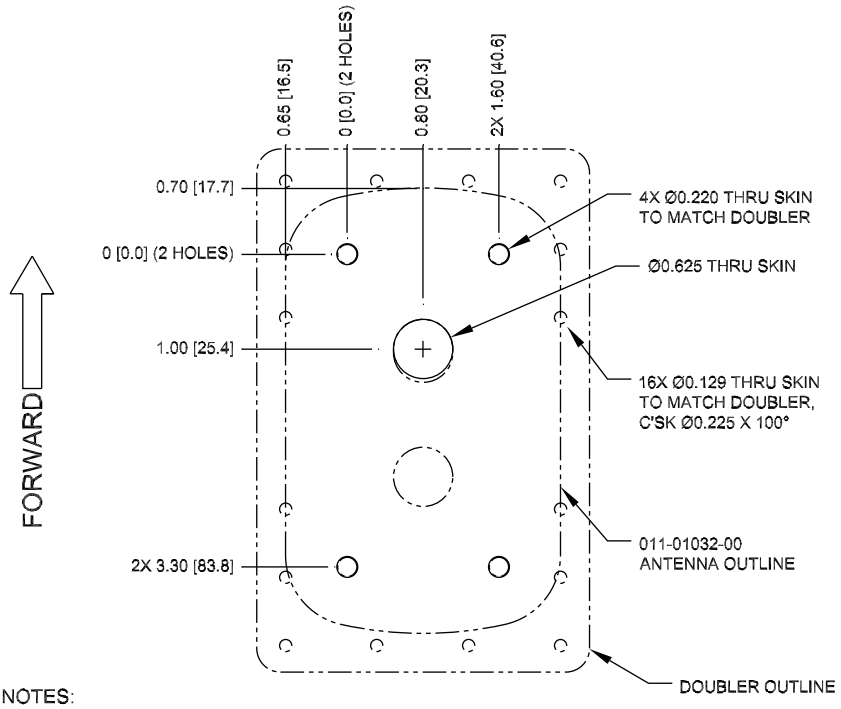

NOTES:
1. DIMENSIONS: INCHES [mm]
2. COUNTERSINK EXTERNAL AIRCRAFT SKIN FOR INSTALLATION OF FLUSH RIVETS.

Figure 4-147 Skin Cutout Detail, ARINC 743 Footprint Antenna, Skin Thickness 0.051" to 0.063"

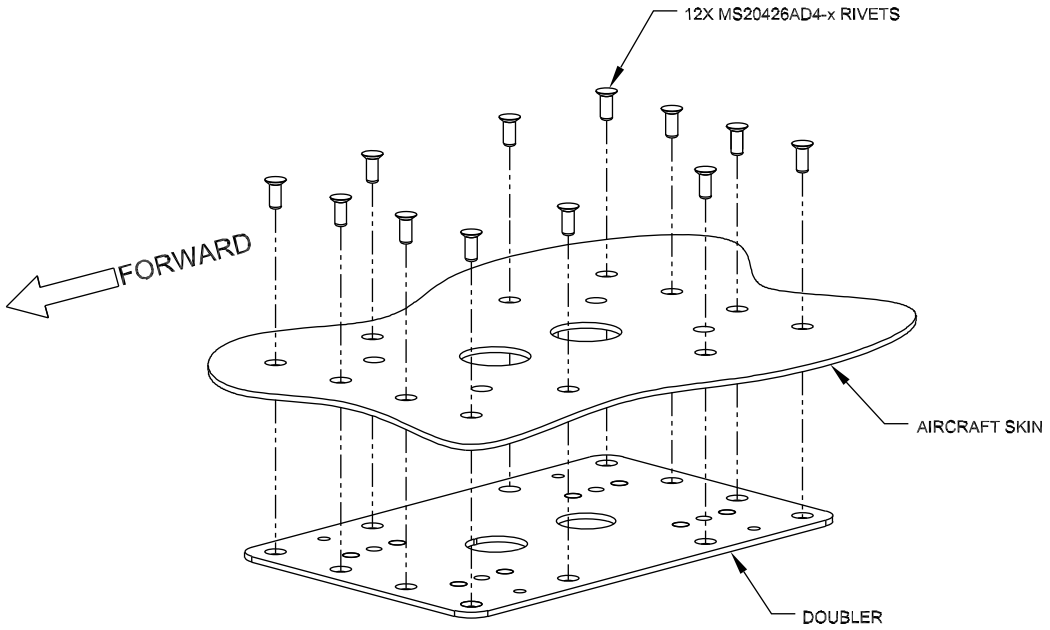

NOTES:
1. MS20426AD4-X RIVET SELECTION (LENGTH) AND INSTALLATION DETERMINED USING THE GUIDANCE FOUND IN AC43.13-1B.

Figure 4-148 Doubler Installation, ARINC 743 Footprint Antenna, Skin Thickness 0.032" to 0.049"

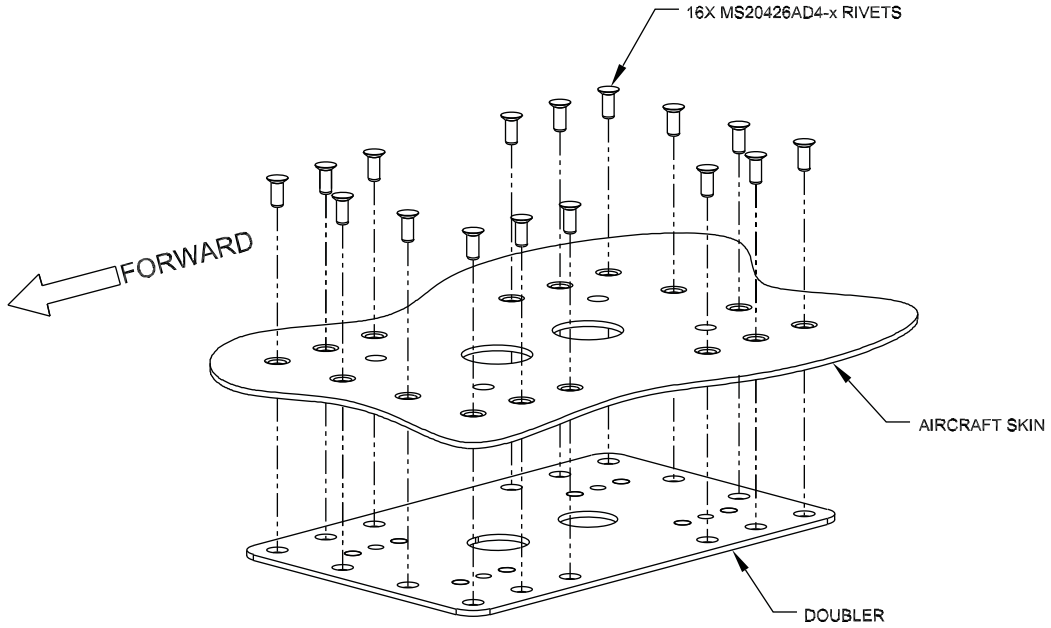

NOTES:
1. MS20426AD4-X RIVET SELECTION (LENGTH) AND INSTALLATION DETERMINED USING THE GUIDANCE FOUND IN AC43.13-1B.

Figure 4-149 Doubler Installation, ARINC 743 Footprint Antenna, Skin Thickness 0.049"

to 0.051"

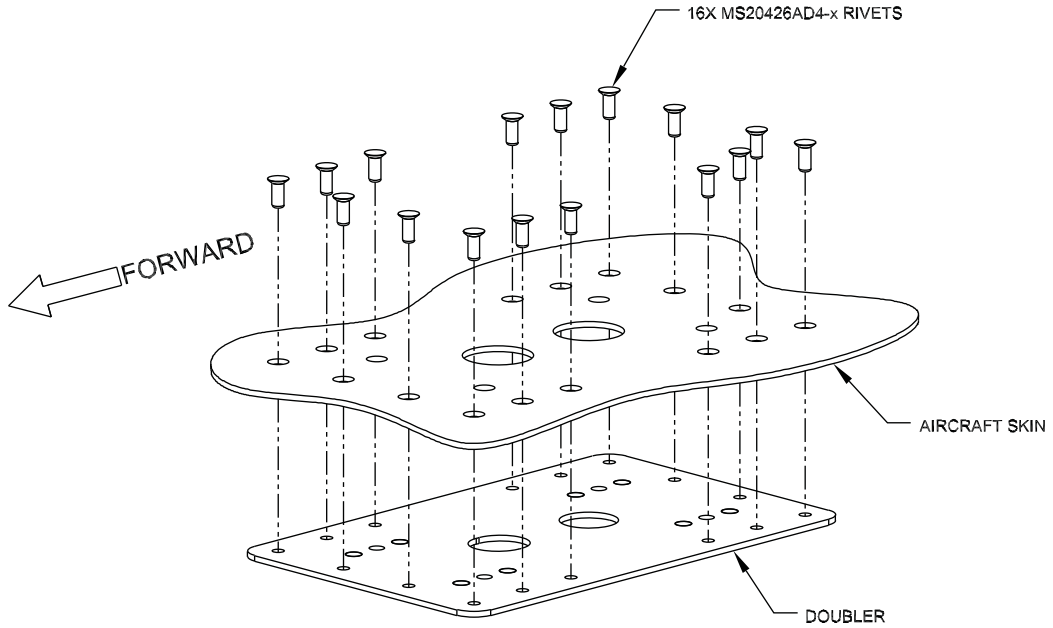

NOTES:
1. MS20426AD4-X RIVET SELECTION (LENGTH) AND INSTALLATION DETERMINED USING THE GUIDANCE FOUND IN AC43.13-1B.

Figure 4-150 Doubler Installation, ARINC 743 Footprint, Skin Thickness 0.051" to 0.063"

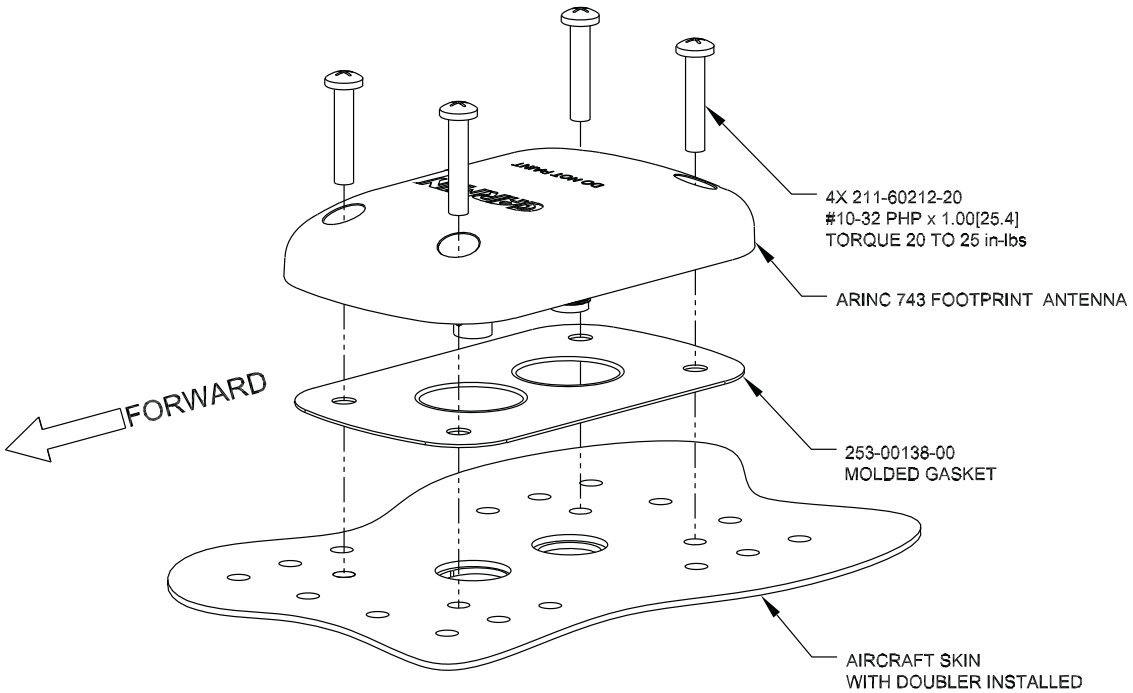

Figure 4-151 Installation of ARINC 743 Footprint Antenna

4.4.21.2.3.2.5.9 Outline and Installation Drawings

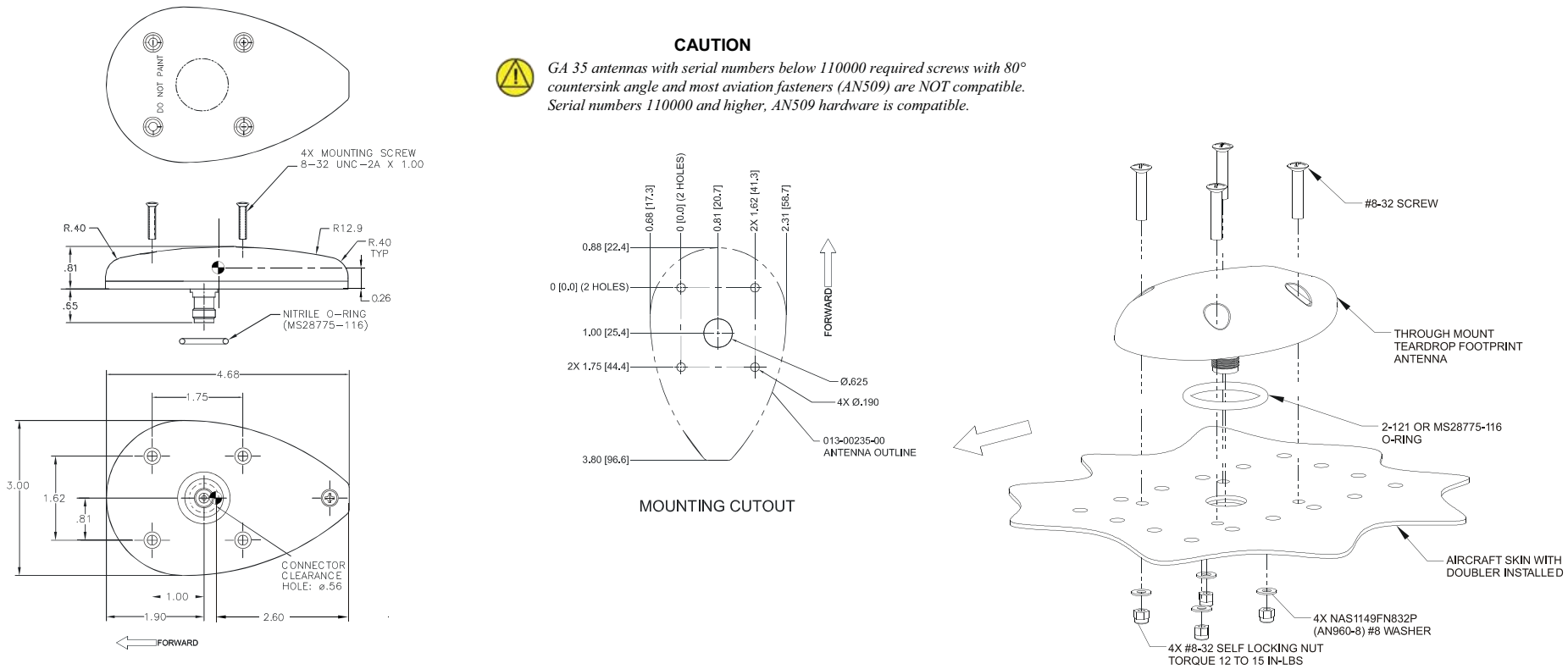

Figure 4-152 GA 35 Installation Drawing

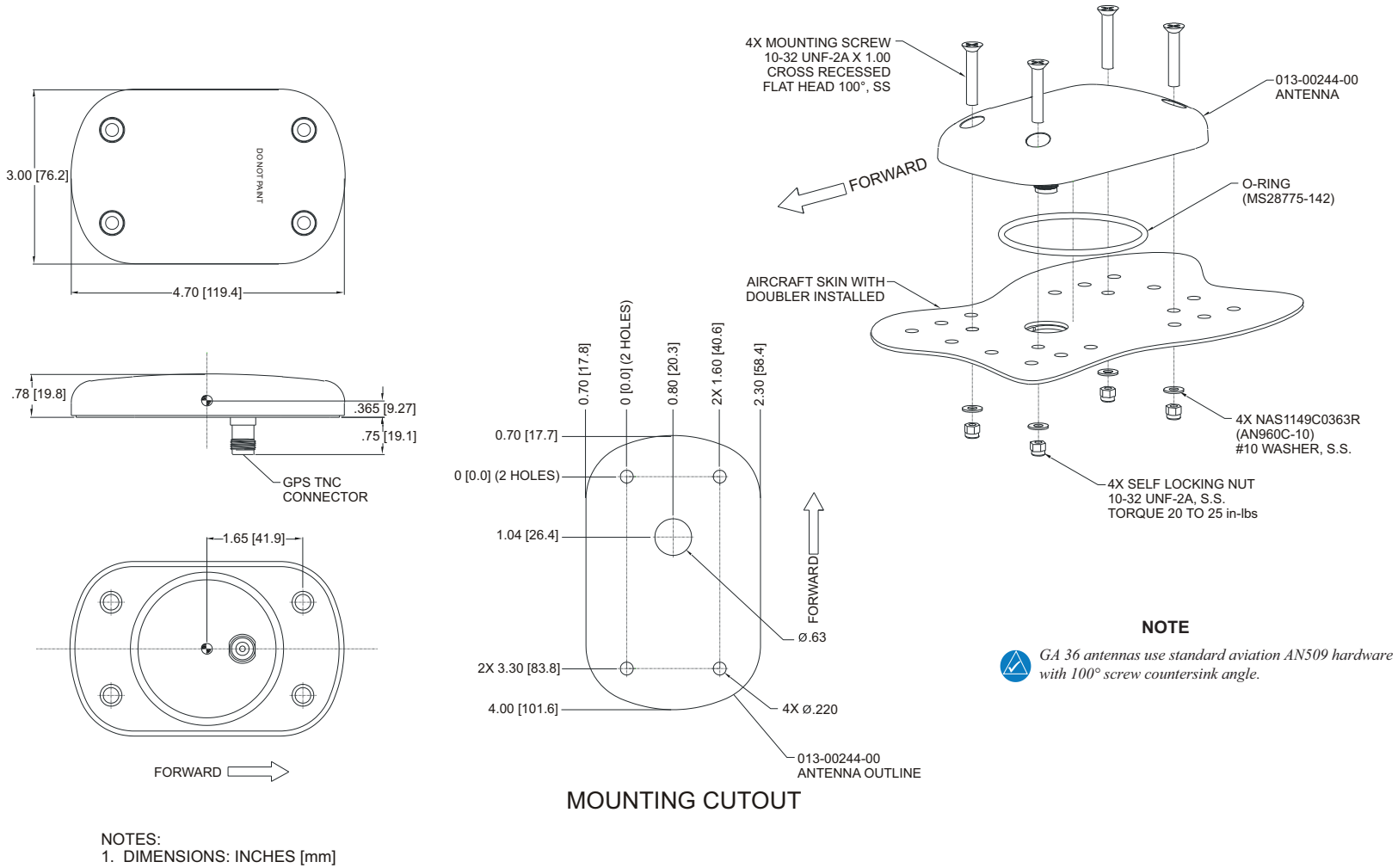

Figure 4-153 GA 36 Installation Drawing

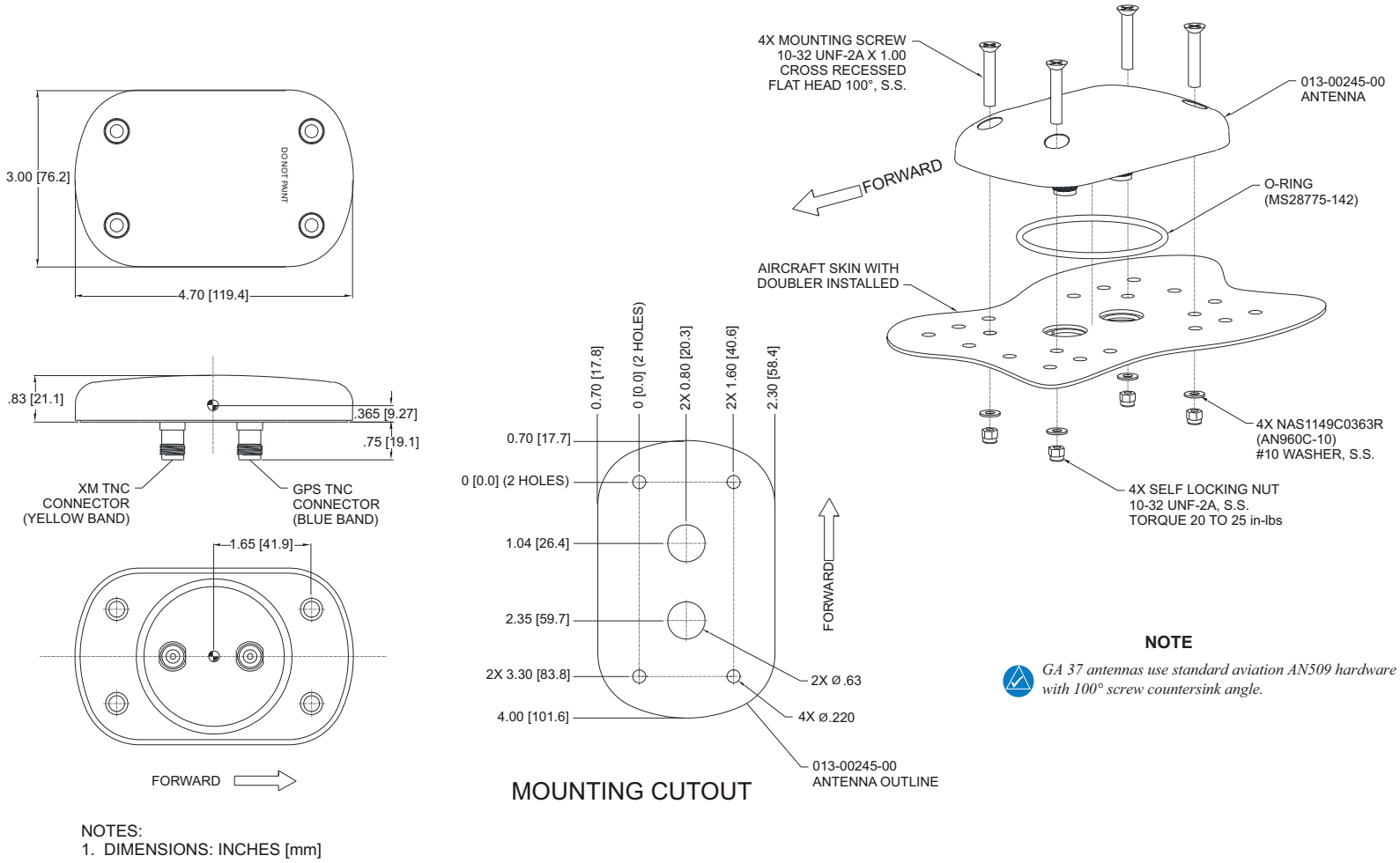

Figure 4-154 GA 37 Installation Drawing

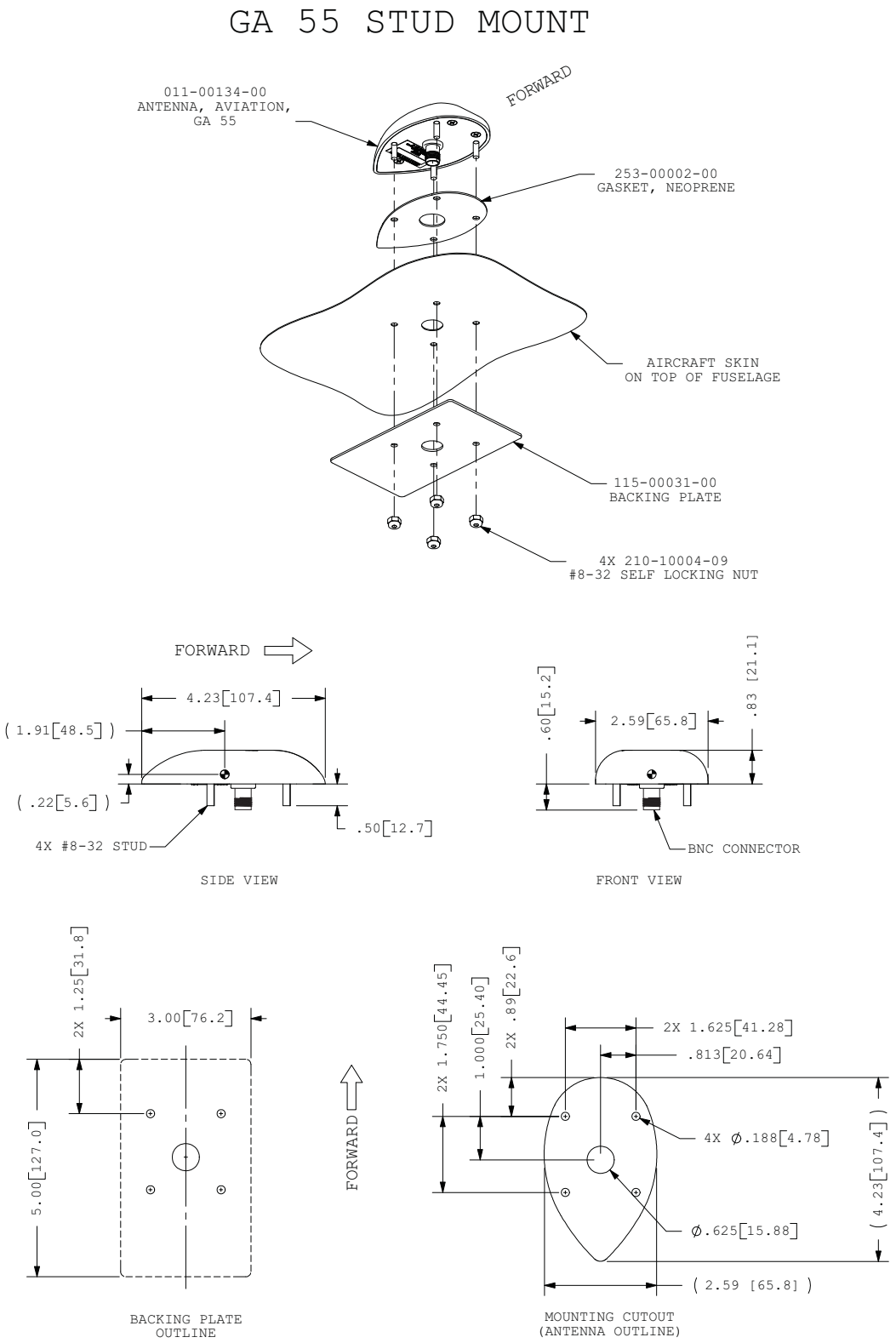

Figure 4-155 GA 55 Installation Drawing

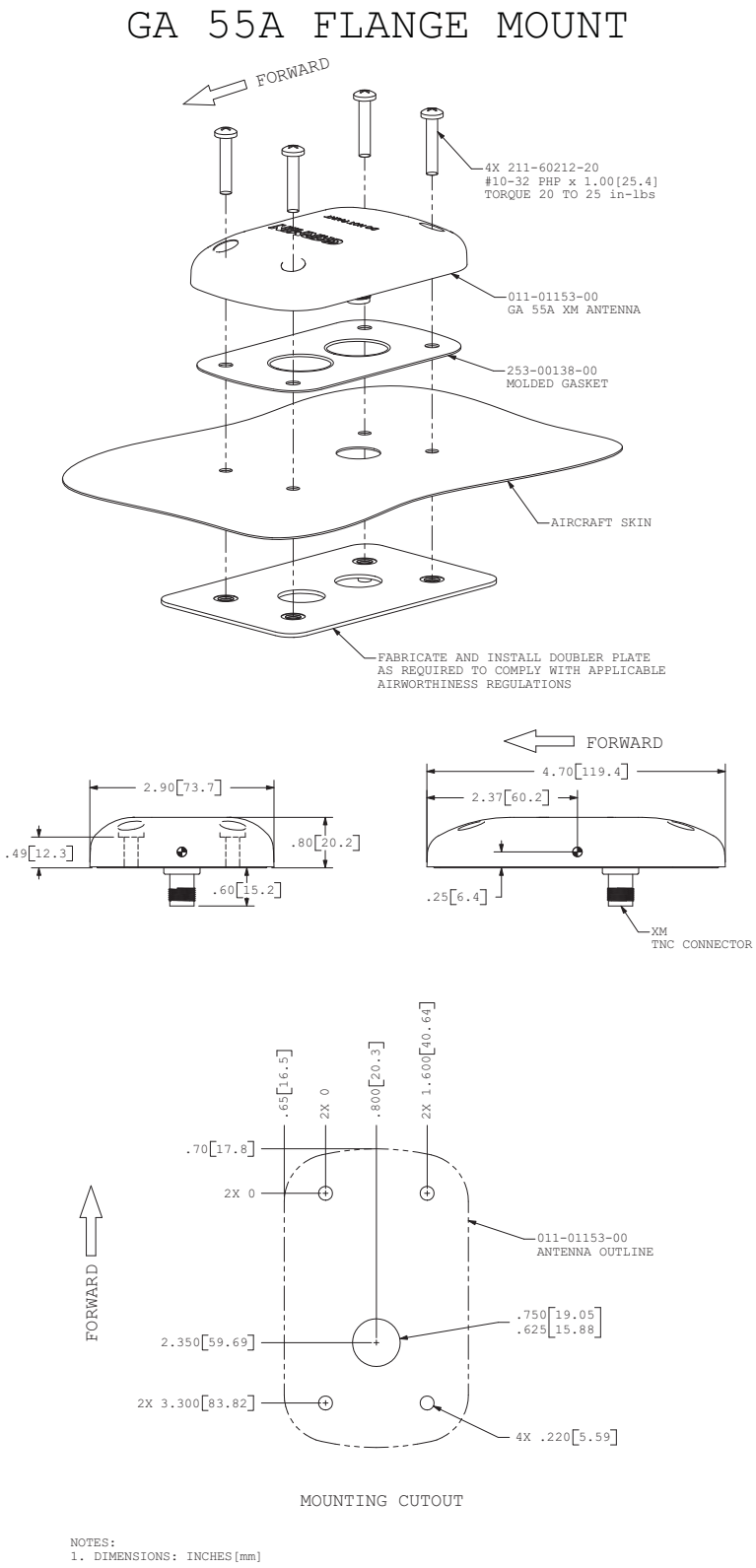

Figure 4-156 GA 55A Installation Drawing

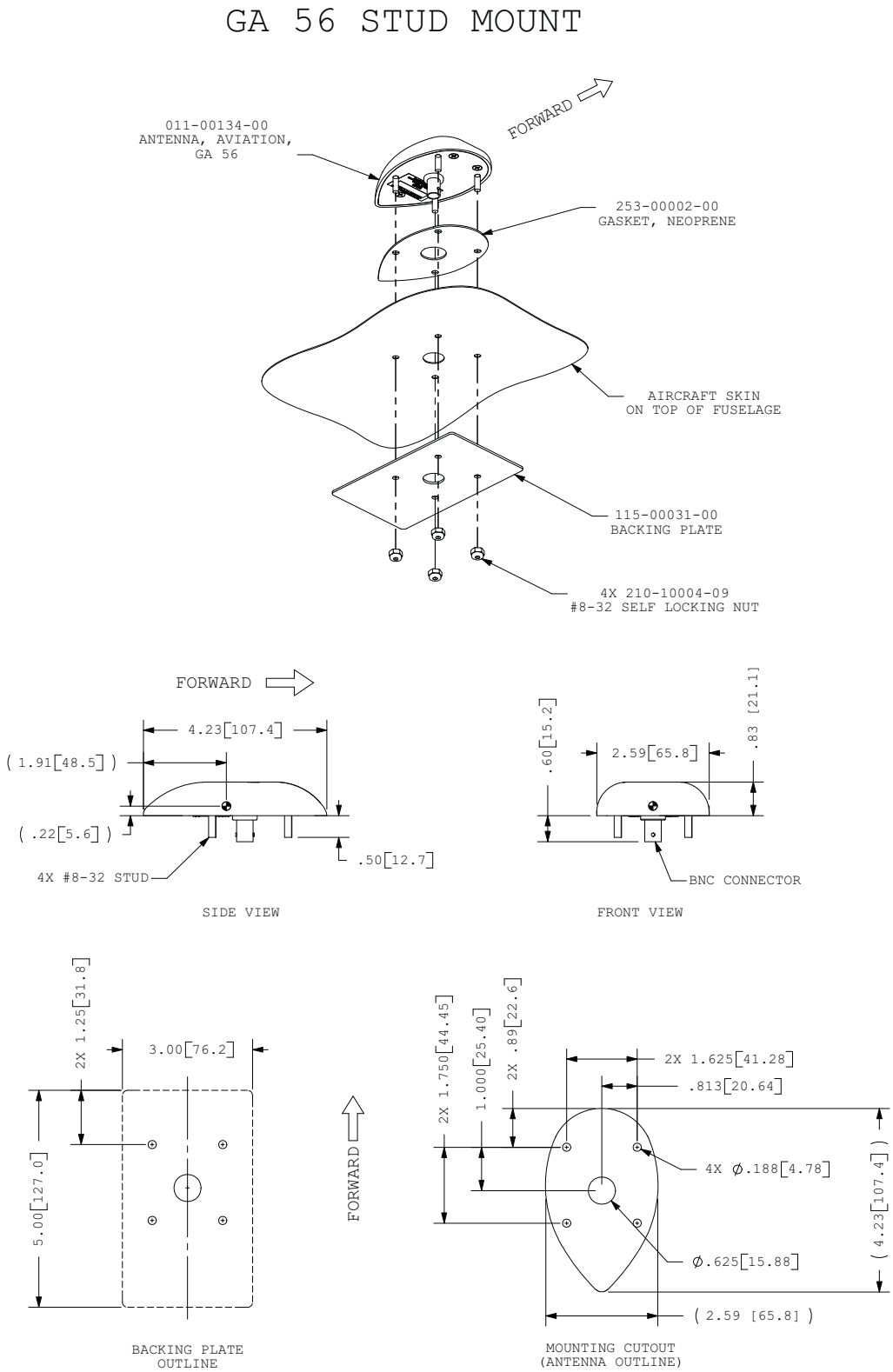

Figure 4-157 GA 56 Installation Drawing

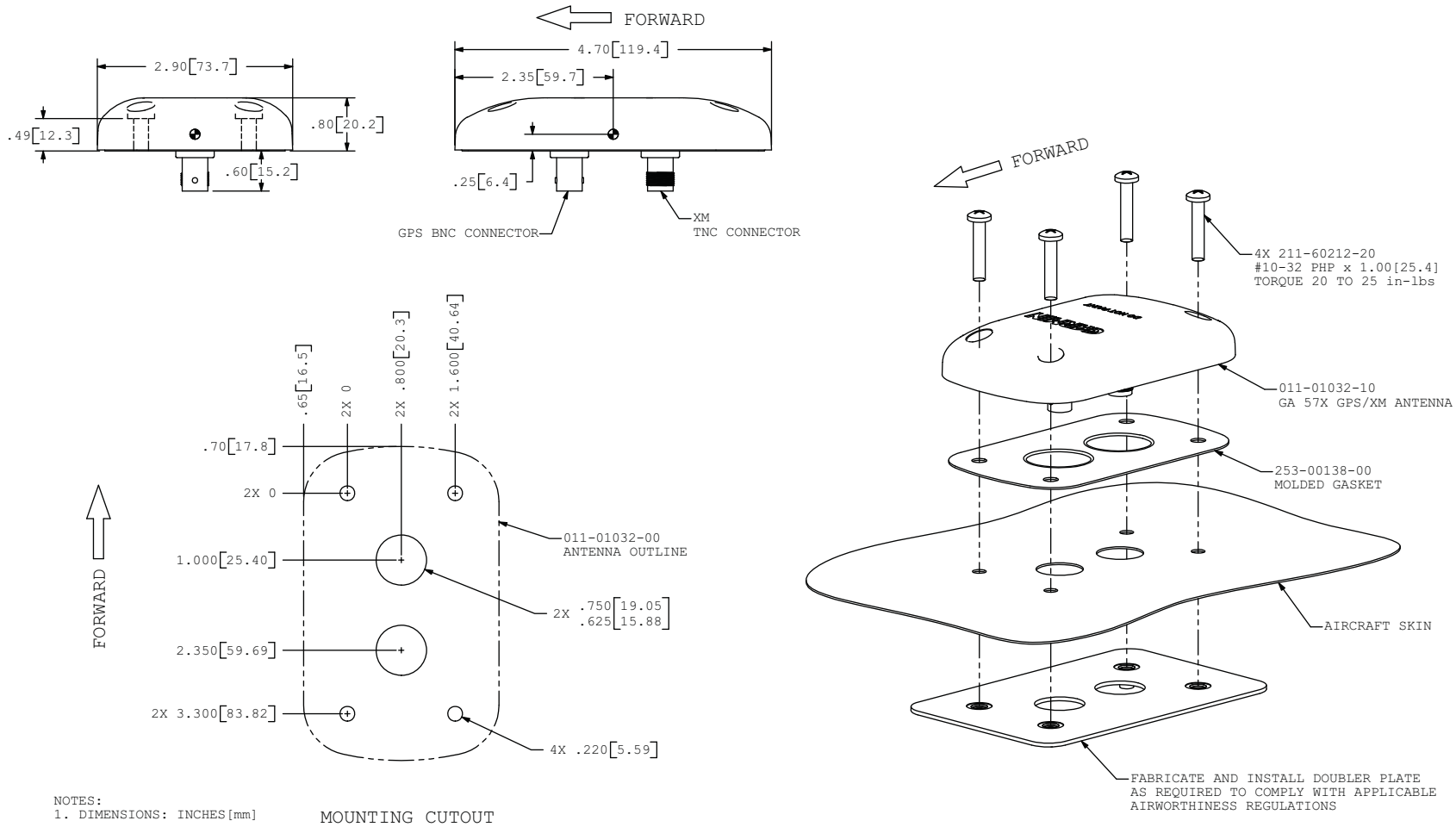

Figure 4-158 GA 57X Installation Drawing

4.4.21.2.3.2.6 Weight and Balance

Table 4-83 lists the specific antenna, doubler, and installation kit weights, as well as cross reference to figures displaying antenna dimensions and CG information.

Table 4-83 Antenna Installation

	Antenna Model					
	GA 35	GA 35S	GA 36	GA 37	GA 55	GA 55A
Mount Style	Through	Through	Through	Through	Stud	Through
Antenna Weight	0.47 lbs (0.21 kg)	0.52 lbs (0.24 kg)	0.47 lbs (0.21 kg)	0.50 lbs (0.23 kg)	0.25 lbs (0.11 kg)	0.43 lbs (0.20 kg)
Doubler Weight	0.09 lbs (0.04 kg)	0.09 lbs (0.04 kg)	0.17 lbs (0.08 kg)	0.17 lbs (0.08 kg)	0.09 lbs (0.04 kg)	0.17 lbs (0.08 kg)
Dimensions and CG Information	Figure 4-159	Figure 4-160	Figure 4-161	Figure 4-162	Figure 4-163	Figure 4-164

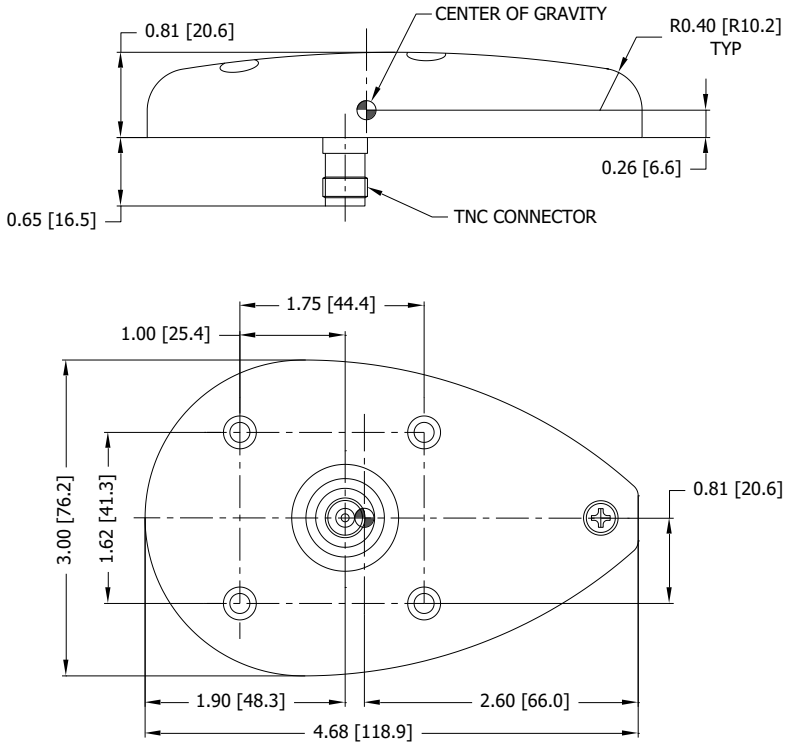

Figure 4-159 GA 35 Antenna Dimensions

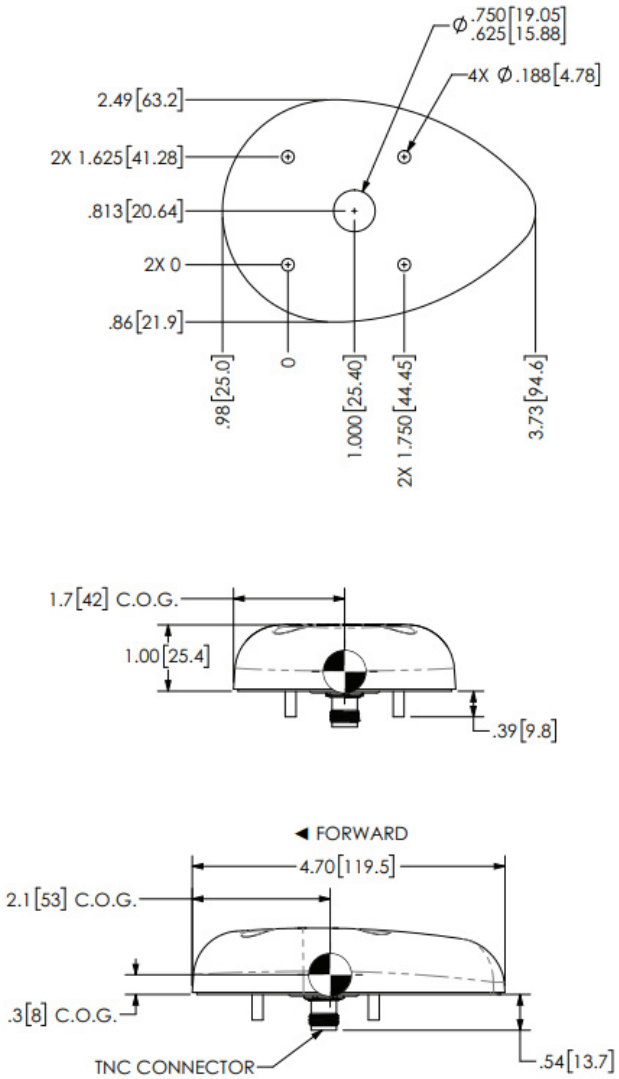

Figure 4-160 GA 35S Antenna Dimensions

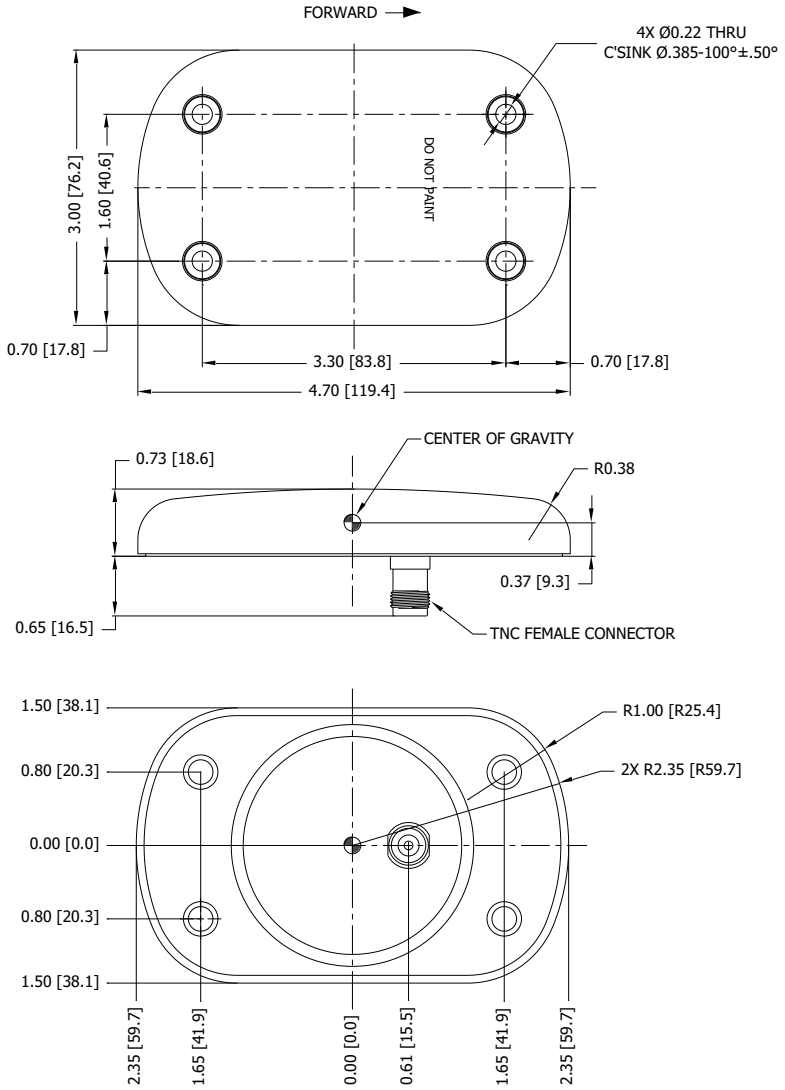

NOTES:

1. DIMENSIONS IN INCHES [MM].

Figure 4-161 GA 36 Antenna Dimensions

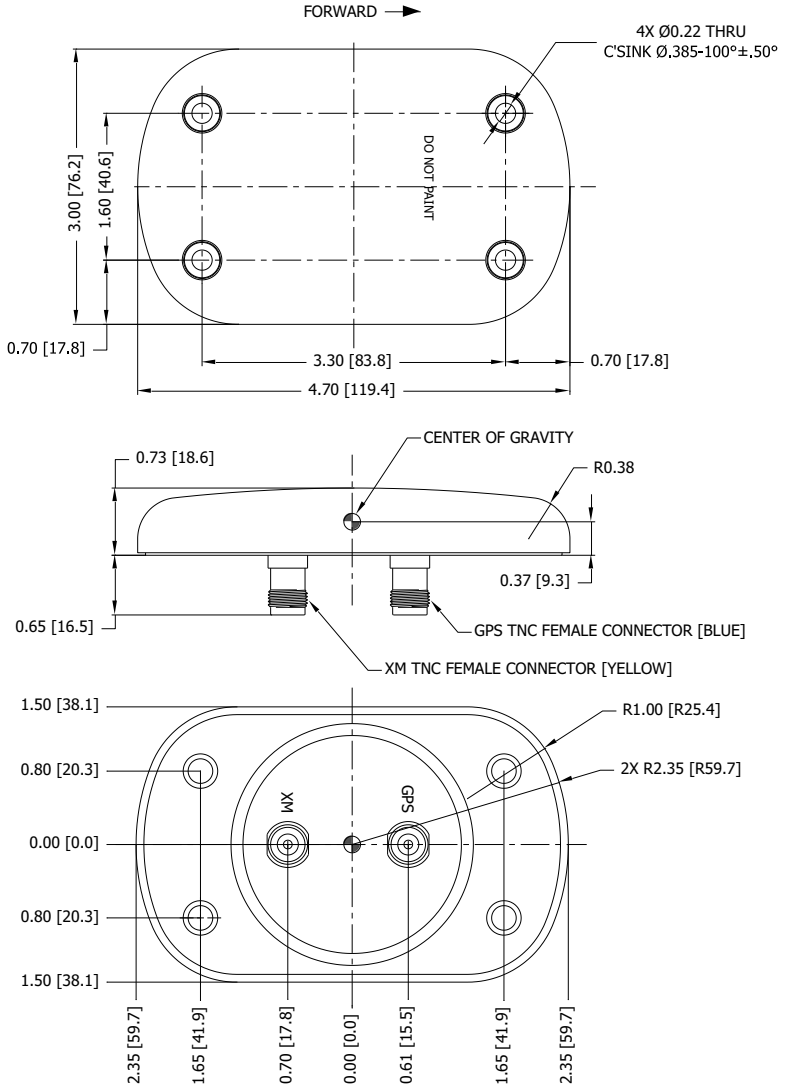

NOTES:

1. DIMENSIONS IN INCHES [MM].

Figure 4-162 GA 37 Antenna Dimensions

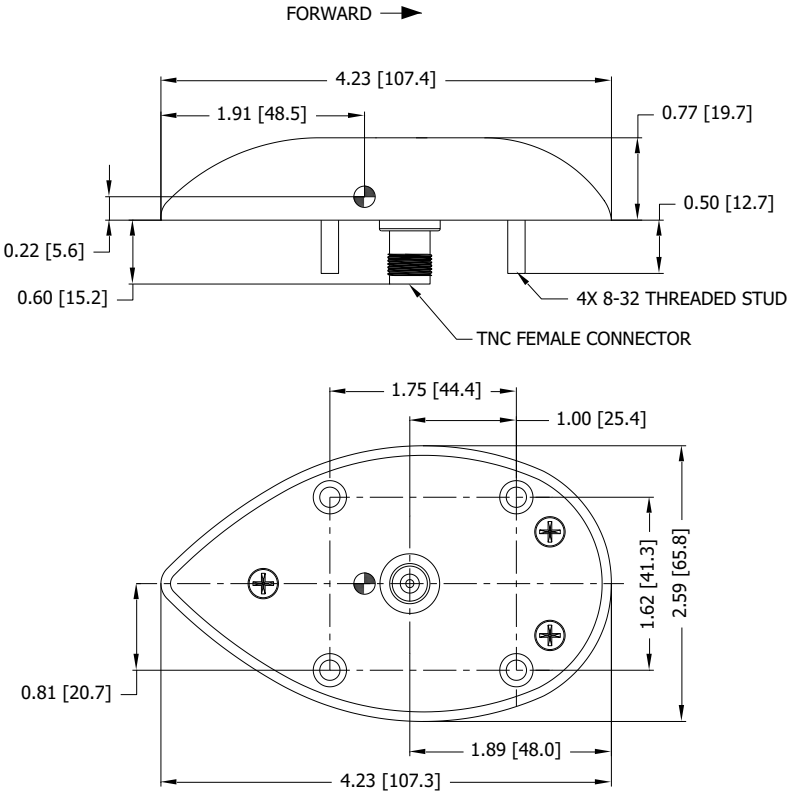

NOTES:

1. DIMENSIONS IN INCHES [MM].

Figure 4-163 GA 55 Antenna Dimensions

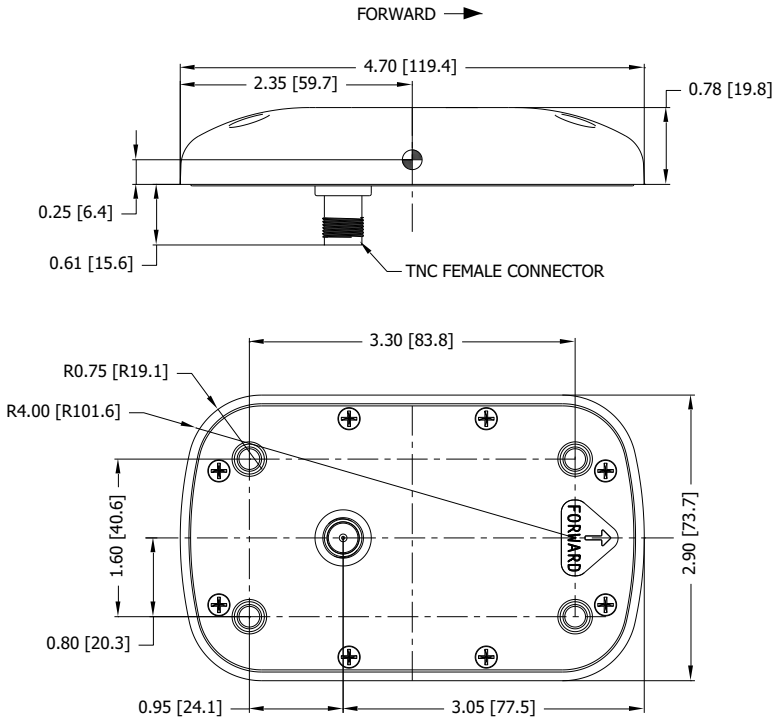

NOTES:
1. DIMENSIONS IN INCHES [MM].

Figure 4-164 GA 55A Antenna Dimensions

4.4.21.2.3.2.7 Non-Garmin GPS Antenna Installation

For non-Garmin antennas, follow the manufacturer's installation instructions. It is the installer's responsibility to make sure the chosen antenna meets FAA standards according to the specific installation.

4.4.21.3 VHF COM Antenna

NOTE

Canadian installations are required to meet Industry Canada specifications for maximum radiation as documented in Radio Specifications Standard 102 (RSS-102). For more information about RF exposure and related Canadian regulatory compliance, contact:

Manager, Radio Equipment Standards
Industry Canada
365 Laurier Avenue
Ottawa, Ontario
K1A 0C8

In accordance with Canadian Radio Specifications Standard 102 (RSS 102), RF field strength exposure to persons from an antenna connected to this device should be limited to 51 V/m for controlled environment and 22 V/m for uncontrolled environment.

NOTE

The COM transceiver antenna(s) of the device is (are) intended to be mounted along the fuselage of the aircraft and accessible only to aircraft maintenance personnel. To reduce RF exposure, avoid installation of antenna(s) in areas of the aircraft that provide crew or passengers direct exposure to antenna radiation. For installations that may provide direct exposure, the limits specified by FCC regulations 47 CFR 1.1310 should be referenced by the installer.

4.4.21.3.1 VHF COM Antenna Mounting Location

The COM antenna should be far away from all projections, engines and propellers. The ground plane surface directly below the antenna should be a flat plane over as large an area as possible (18" square, minimum). The antenna should be mounted a minimum of six feet from any DME or other COM antennas, four feet from any ADF sense antennas, and two feet from the GDU 116( ) and its GPS antenna. The COM antenna should also be mounted as far apart as practical from the ELT antenna. Some ELTs have exhibited re-radiation problems generating harmonics that may interfere with GPS signals. This can happen when the COM (GDU 116C or any other COM) is transmitting on certain frequencies such as 121.15 or 121.175 MHz, which may cause the ELT output circuit to oscillate from the signal coming in on the ELT antenna coax. If simultaneous use of two COM transceivers is desired (split-COM or simul-COM), the COM antennas should be spaced for maximum isolation. A configuration of one topside antenna and one bottom side antenna is recommended. The GDU 116C does not require a transmit interlock, but other COM radios such as the GNS 430W may require it for split COM operations.

4.4.21.3.2 VHF COM Antenna Cable Installation

The antenna coaxial cable must be made of RG-142B, RG-400, or a comparable quality 50 Ω coaxial.

Check for insertion loss and VSWR. A directional power meter such as a Bird or similar directional power meter with a minimum power rating of 50 watts and covering 118-137 MHz should be used to measure VSWR. The power meter should be inserted as close to the transceiver as possible. When rack and harness buildup is performed in the shop, the coax termination may be provisioned by using a 6-inch inline BNC connection. This would be an acceptable place to insert the power meter. Any problem with the antenna installation is most likely seen as high reflected power. The VSWR should typically be less than 2.5:1 at the band edges of 118 MHz and 137 MHz. In some installations, the VSWR measured may be as high as 3:1 depending on mounting proximity to skids, floats, cargo pods and/or wire strike devices. However, a VSWR of 3:1 will reduce the operational range but the transmitter is designed to work into a VSWR up to 5:1 without damage.

4.4.21.4 VHF NAV Antenna

4.4.21.4.1 VHF NAV Antenna Mounting Location

The NAV antenna should have a clear line of sight in all directions, if possible. The antenna should be mounted as close to the centerline of the aircraft as possible, minimizing the lateral offset. The antenna should be mounted no closer than two feet from any GPS antenna or any other antenna that may emit interference.

4.4.21.4.2 VHF NAV Antenna Cable Installation

For the NAV antenna(s), RG-142B, RG-400, or an equivalent 50 Ω coaxial is recommended.

4.4.21.4.2.1 VHF NAV Antenna Cable Splitter Installation

The need for a NAV antenna cable splitter (Garmin P/N 013-00112-00) is installation-dependent. Wire the splitter as shown in figure 4-166. Use the following guidance when determining a proper location to mount the splitter:

- Locate the splitter such that minimal coaxial cable is used in the installation. In general, this will be as close to the AXIS flight display as practical.
- Install the splitter on a flat surface in the fuselage in a location free from excessive vibration.
- Splitter installation requires four #4-40 fasteners (torque within 5 to 6 in-lbf).
- Fasteners must be standard aircraft hardware meeting industry-accepted specifications (e.g., AN, MS, or NAS).

4.4.21.4.2.2 VHF NAV Antenna Cable Diplexer Installation

The need for a NAV antenna cable Comant CI-507 diplexer is installation-dependent. Wire the diplexer as shown in the applicable diagram in figure 4-166. When determining a proper location to mount the diplexer, use the following guidance:

- Locate the diplexer such that minimal coaxial cable is used in the installation. In general, this will be as close to the antennas as practical.
- Install the diplexer on a flat surface in the fuselage in a location free from excessive vibration.
- Diplexer installation requires two #10-32 fasteners (torque within 22 to 25 in-lbf).
- Fasteners must be standard aircraft hardware meeting industry-accepted specifications (e.g., AN, MS, or NAS).

4.4.21.5 Outline and Installation Drawings

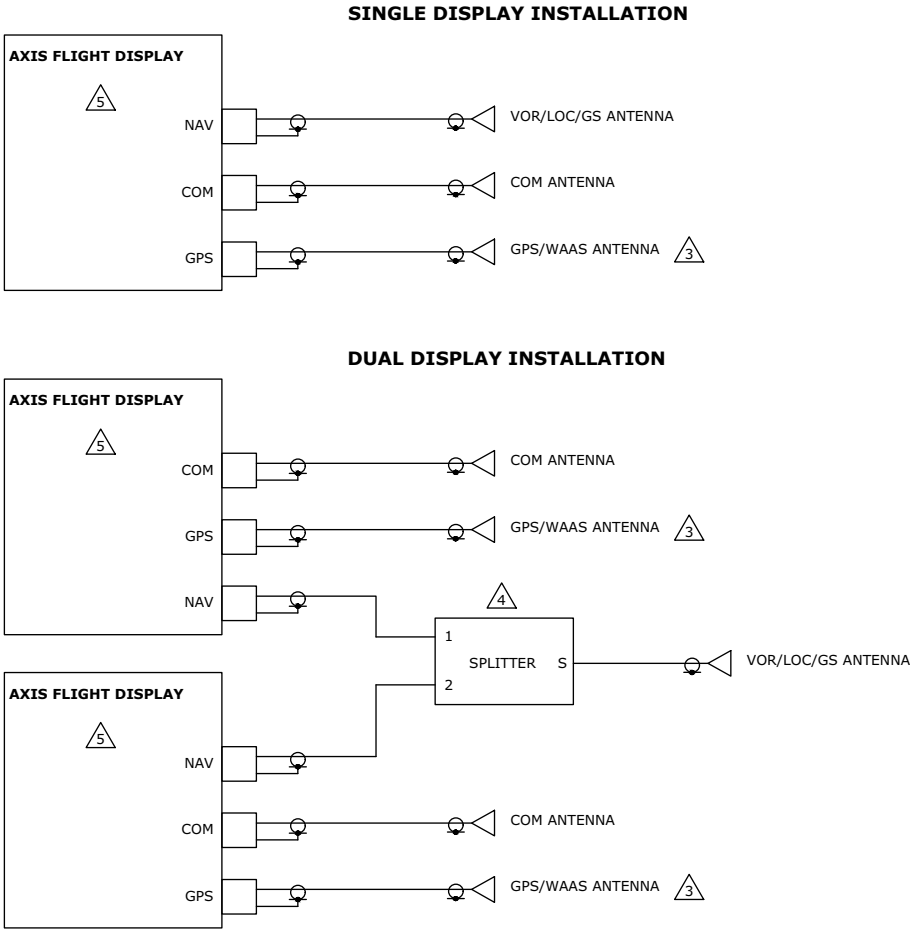

NOTES

1 REFER TO SECTION 4.4.21.2.2, SECTION 4.4.21.3.2, AND SECTION 4.4.21.4.2 FOR ANTENNA CABLE SPECIFICATIONS.

2 REFER TO SECTION 4.4.21.4.2.1 AND SECTION 4.4.21.4.2.2 FOR SPLITTER AND DIPLEXER INSTALLATION GUIDANCE.

3 THE GPS ANTENNA COAXIAL CABLE MUST BE DOUBLE OR TRIPLE SHIELDED AND THE LOSS (INCLUDING CONNECTORS)UST USUALLY BE GREATER THAN 1.5 DB AND LESS THAN 6.5 DB. REFER TO SECTION 3.2.5 FOR ADDITIONAL INFORMATION. THE GDU 116B USES A BNC CONNECTOR AND THE GDU 116C/NC USES A TNC CONNECTOR.

4 GARMIN P/N 013-00112-00 (MINI-CIRCUITS SPLITTER P/N ZFSC-2-1B+) MUST BE USED.

5 THE GDU CAN INTERFACE WITH ANY ANTENNA SPECIFIED IN APPENDIX C.

GDU 116B CAN INTERFACE TO AN EXTERNALLY MOUNTED ANTENNA OR THE VFR GLARESHIELD ANTENNA: P/N 011-04036-10. GDU 116C/NC MUST BE CONNECTED TO AN EXTERNALLY MOUNTED ANTENNA.

GDU 116C REQUIRES CONNECTION TO GPS/WAAS AND COM ANTENNAS.

GDU 116NC REQUIRES CONNECTION TO GPS/WAAS, COM, AND VOR/LOC/GS ANTENNAS.

Figure 4-165 AXIS Flight Display Antenna (Single Antenna) Interconnect

SINGLE DISPLAY WITH DUAL NAV ANTENNA INSTALLATION

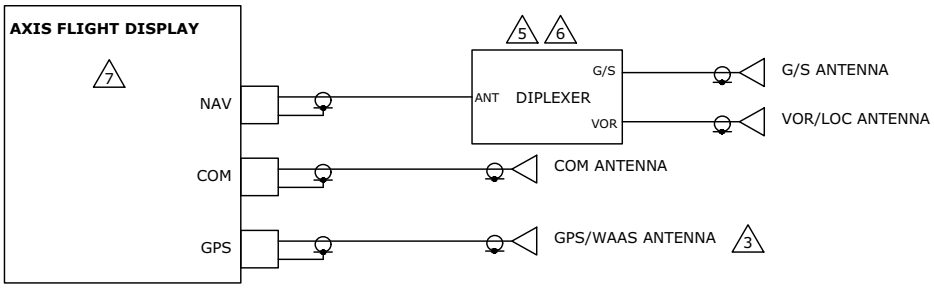

DUAL DISPLAY WITH DUAL NAV ANTENNA INSTALLATION

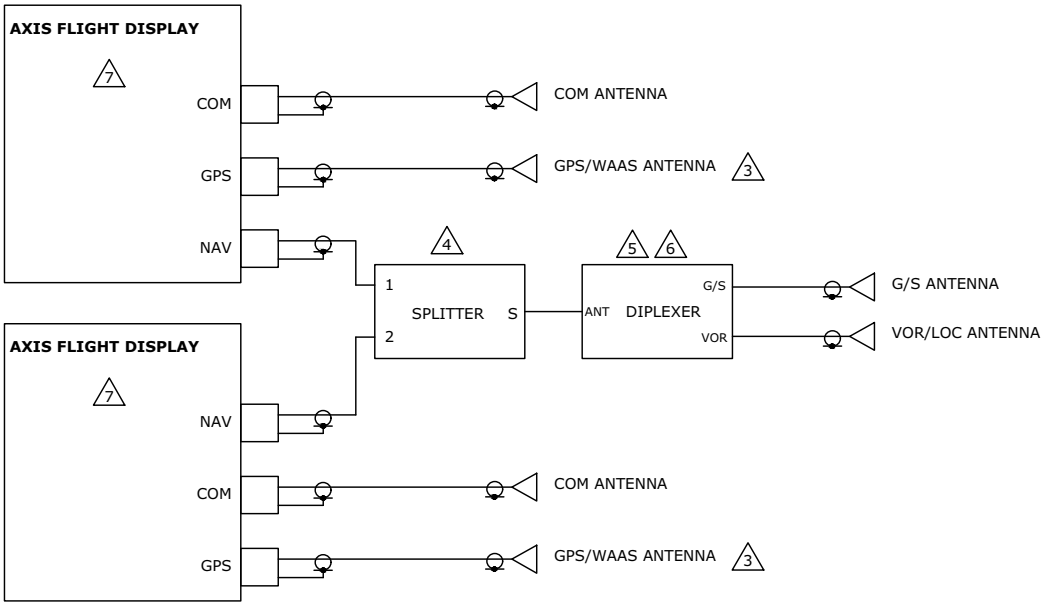

NOTES

1 REFER TO SECTION 4.4.21.2.2, SECTION 4.4.21.3.2, AND SECTION 4.4.21.4.2 FOR ANTENNA CABLE SPECIFICATIONS.

2 REFER TO SECTION 4.4.21.4.2.1 AND SECTION 4.4.21.4.2.2 FOR SPLITTER AND DIPLEXER INSTALLATION GUIDANCE.

3 THE GPS ANTENNA COAXIAL CABLE MUST BE DOUBLE OR TRIPLE SHIELDED AND THE LOSS (INCLUDING CONNECTORS)UST USUALLY BE GREATER THAN 1.5 DB AND LESS THAN 6.5 DB. REFER TO SECTION 3.2.5 FOR ADDITIONAL INFORMATION. THE GDU 116B USES A BNC CONNECTOR AND THE GDU 116C/NC USES A TNC CONNECTOR.

4 GARMIN P/N 013-00112-00 (MINI-CIRCUITS SPLITTER P/N ZFSC-2-1B+) MUST BE USED.

Figure 4-166 AXIS Flight Display Antenna (Diplexer) Interconnect Sheet 1 of 2

NOTES CONT'D

5 COMANT DIPLEXER P/N CI-507 MUST BE USED.

6 THE DIPLEXER IS INSTALLED BACKWARDS FROM TRADITIONAL APPLICATIONS. WHEN A GS AND VOR/LOC ANTENNA IS INSTALLED, IT IS REQUIRED TO JOIN THE SIGNALS OF BOTH ANTENNAS WITH THE CI-507 DIPLEXER.

THE GDU CAN INTERFACE WITH ANY ANTENNA SPECIFIED IN APPENDIX C.

7 GDU 116B CAN INTERFACE TO AN EXTERNALLY MOUNTED ANTENNA OR THE VFR GLARESHIELD ANTENNA: P/N 011-04036-10. GDU 116C/NC MUST BE CONNECTED TO AN EXTERNALLY MOUNTED ANTENNA.

GDU 116C REQUIRES CONNECTION TO GPS/WAAS AND COM ANTENNAS.

GDU 116NC REQUIRES CONNECTION TO GPS/WAAS, COM, AND VOR/LOC/GS ANTENNAS.

Figure 4-166 AXIS Flight Display Antenna (Diplexer) Interconnect Sheet 2 of 2

SINGLE DISPLAY, EXTERNAL VHF NAV, AND SINGLE ANTENNA

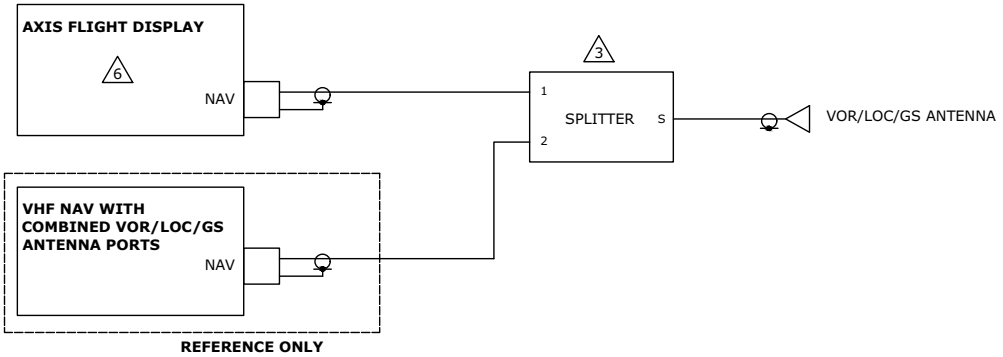

SINGLE DISPLAY, EXTERNAL VHF NAV, AND DUAL ANTENNAS

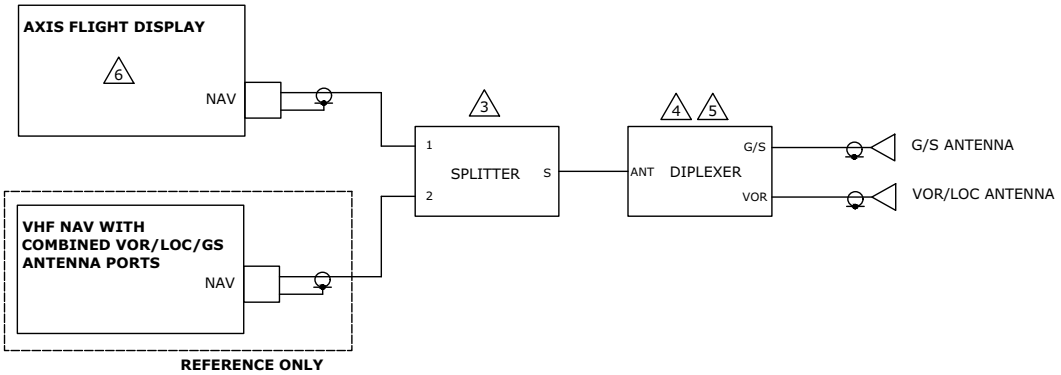

NOTES

1 REFER TO SECTION 4.4.21.2.2, SECTION 4.4.21.3.2, AND SECTION 4.4.21.4.2 FOR ANTENNA CABLE SPECIFICATIONS.

2 REFER TO SECTION 4.4.21.4.2.1 AND SECTION 4.4.21.4.2.2 FOR SPLITTER AND DIPLEXER INSTALLATION GUIDANCE.

3 GARMIN P/N 013-00112-00 (MINI-CIRCUITS SPLITTER P/N ZFSC-2-1B+) MUST BE USED.

4 COMANT DIPLEXER P/N CI-507 MUST BE USED.

5 THE DIPLEXER IS INSTALLED BACKWARDS FROM TRADITIONAL APPLICATIONS. WHEN A GS AND VOR/LOC ANTENNA IS INSTALLED, IT IS REQUIRED TO JOIN THE SIGNALS OF BOTH ANTENNAS WITH THE CI-507 DIPLEXER.

6 THE GDU CAN INTERFACE WITH ANY ANTENNA SPECIFIED IN APPENDIX C.

GDU 116B CAN INTERFACE TO AN EXTERNALLY MOUNTED ANTENNA OR THE VFR GLARESHIELD ANTENNA: P/N 011-04036-10. GDU 116C/NC MUST BE CONNECTED TO AN EXTERNALLY MOUNTED ANTENNA.

GDU 116C REQUIRES CONNECTION TO GPS/WAAS AND COM ANTENNAS.

GDU 116NC REQUIRES CONNECTION TO GPS/WAAS, COM, AND VOR/LOC/GS ANTENNAS.

Figure 4-167 AXIS Flight Display Antenna (External VHF/NAV) Interconnect

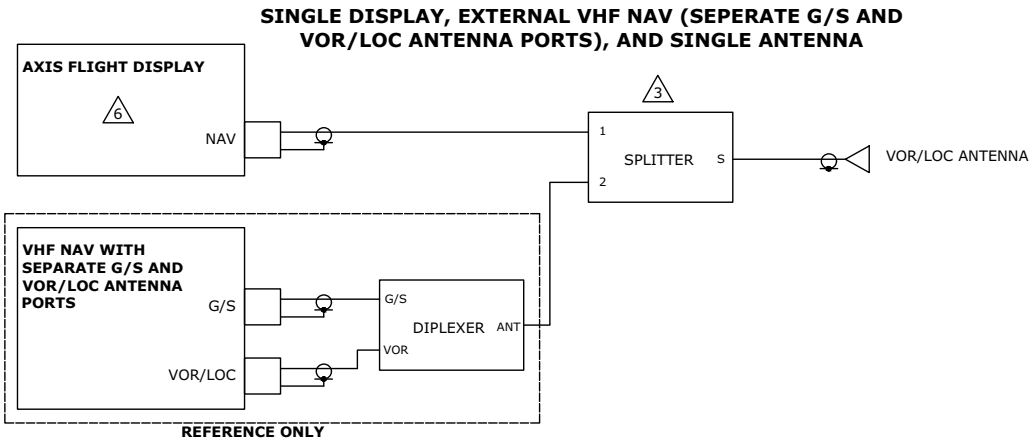

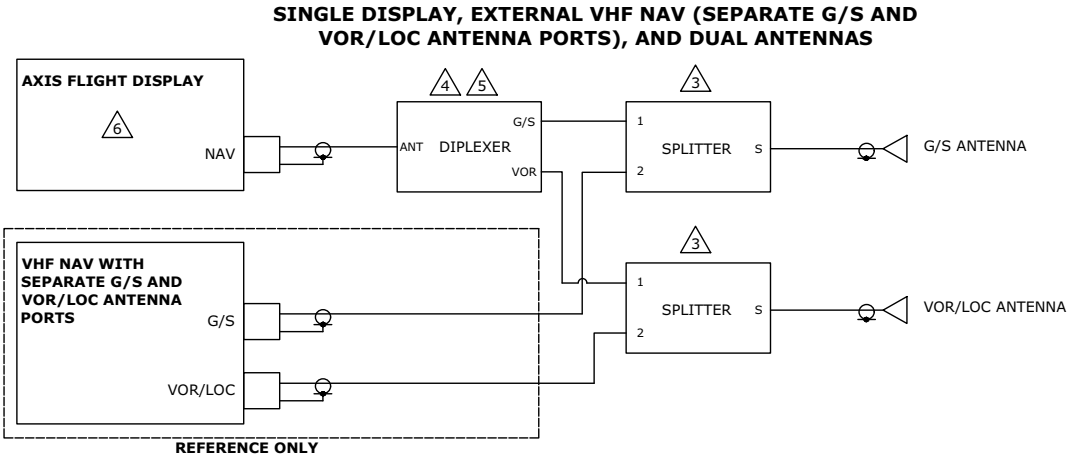

NOTES

1 REFER TO SECTION 4.4.21.2.2, SECTION 4.4.21.3.2, AND SECTION 4.4.21.4.2 FOR ANTENNA CABLE SPECIFICATIONS.

2 REFER TO SECTION 4.4.21.4.2.1 AND SECTION 4.4.21.4.2.2 FOR SPLITTER AND DIPLEXER INSTALLATION GUIDANCE.

3 GARMIN P/N 013-00112-00 (MINI-CIRCUITS SPLITTER P/N ZFSC-2-1B+) MUST BE USED.

4 COMANT DIPLEXER P/N CI-507 MUST BE USED.

5 THE DIPLEXER IS INSTALLED BACKWARDS FROM TRADITIONAL APPLICATIONS. WHEN A GS AND VOR/LOC ANTENNA IS INSTALLED, IT IS REQUIRED TO JOIN THE SIGNALS OF BOTH ANTENNAS WITH THE CI-507 DIPLEXER.

6 THE GDU CAN INTERFACE WITH ANY ANTENNA SPECIFIED IN APPENDIX C.

GDU 116B CAN INTERFACE TO AN EXTERNALLY MOUNTED ANTENNA OR THE VFR GLARESHIELD ANTENNA: P/N 011-04036-10. GDU 116C/NC MUST BE CONNECTED TO AN EXTERNALLY MOUNTED ANTENNA.

GDU 116C REQUIRES CONNECTION TO GPS/WAAS AND COM ANTENNAS.

GDU 116NC REQUIRES CONNECTION TO GPS/WAAS, COM, AND VOR/LOC/GS ANTENNAS.

Figure 4-168 AXIS Flight Display Antenna Interconnect (External VHF/NAV, Diplexer)

4.4.21.6 ADS-B Antenna Cable Installation

The antenna should be mounted on the bottom of the aircraft and located at least 3.3 feet from high power transmitting antennas such as VHF COM, HF transmitter, DME, Transponder, and Radar. The connection is made by attaching the coax cable from the external antenna to the BNC connector on the GDL 52R.

For the ADS-B antenna, RG-142, RG-400 coaxial is recommended.

Ensure the total loss (cable plus connector) of the ADS-B coax installation is no more than 5 dB at 1090 MHz once terminated. Use the following guidance to ensure this requirement is met:

- RG-142 cable loss = 0.153 dB per foot
- RG-400 cable loss = 0.181 dB per foot
- Connector loss = 0.2 dB per connector

NOTE

Bulkhead connections count as a connector, so the total loss through a bulkhead connection is 0.6 dB.

NOTE

The final cable length tolerance is ±3 inches of calculated maximum length.

4.4.22 Engine/Airframe Sensor Installation

NOTE

The following sections contain general guidance on engine and airframe sensor installation. This information is provided for reference only. The installer should always follow any installation guidance and instructions provided by the applicable engine, sensor, or kit-plane manufacturer. Additionally, all installation practices should be done in accordance with AC 43.13-1B.

4.4.22.1 CHT (Cylinder Head Temperature)

Both Type J and Type K grounded thermocouples are supported for cylinder head temperature (CHT) measurements. Type K thermocouples are more commonly used for CHT.

To maintain measurement accuracy, appropriate thermocouple extension wire must be used to connect the CHT probe sensor wires directly to the inputs of the GEA 24/GEA 110/GSU 73. To minimize risk of breakage, it is recommended that a high-quality stranded (as opposed to solid) thermocouple wire be used. For Type K thermocouples, one such example of appropriate wire is TT-K-22S Type K thermocouple wire from Omega Engineering.

Thermocouple extension wire lengths may vary between cylinders for installation convenience; there is no requirement to use the same length of thermocouple extension wire for each engine cylinder. However, for each individual thermocouple lead, the positive and negative wires should be the same length. When attaching thermocouple extension wire with splices or connectors, the connections for an individual pair of positive/negative wires should be located close together to make sure they are exposed to similar ambient temperatures.

NOTE

If ungrounded thermocouples are used, the low side must be connected to a GEA 24/GSU 73 ground pin.

4.4.22.1.1 Lycoming/Continental CHT Sensor Installation

Garmin sensor kits for Lycoming and Continental engines include Alcor 86253 Type K thermocouple probes (Garmin P/N 494-70000-00). Refer to Alcor CHT Installation Instructions (P/N 59167) for complete installation details. Engine manufacturer's guidance should always be consulted for proper location of CHT probes. A finger sized loop should be provided to allow sufficient strain relief of the probe assembly, and care should be taken to make sure that no chafing of the wires occurs.

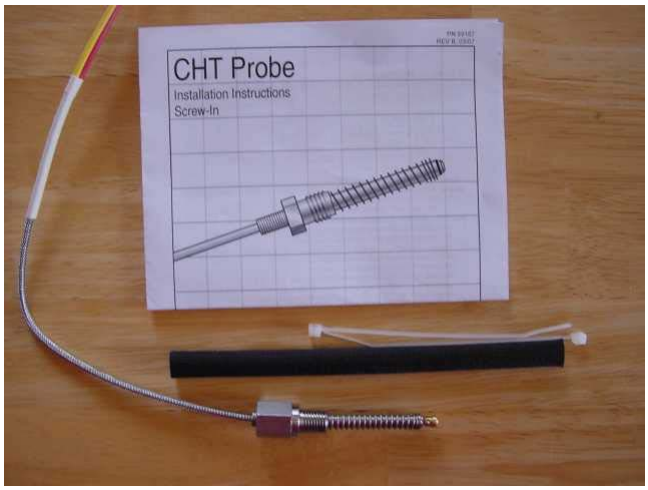

Figure 4-169 CHT Probe Package

Figure 4-170 CHT Probe Well

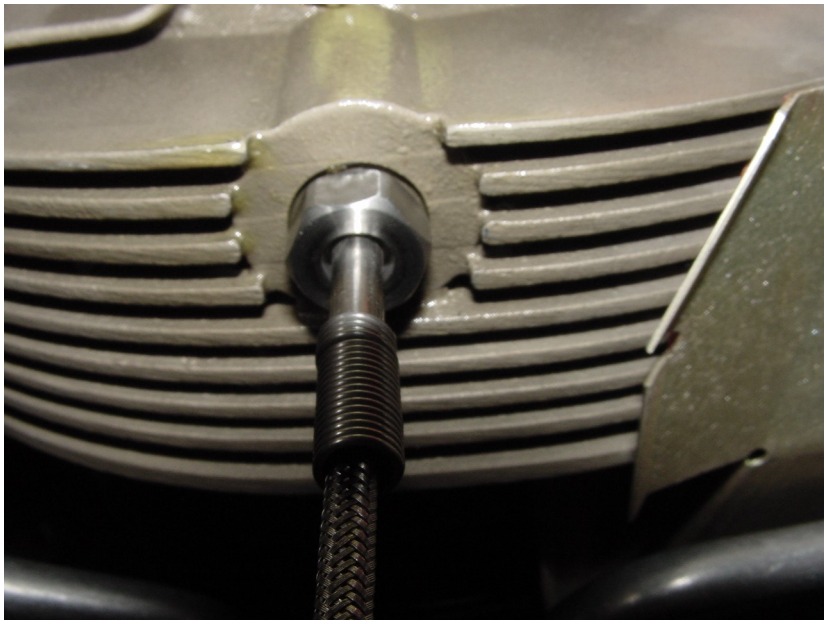

Figure 4-171 One Piece CHT Probe Installed

4.4.22.1.2 EGT (Exhaust Gas Temperature)

Type K grounded thermocouples are supported for exhaust gas temperature (EGT) measurements.

NOTE

If ungrounded thermocouples are used, the low side must be taken to a GEA 24/GEA 110/ GSU 73 ground pin.

To maintain measurement accuracy, Type K thermocouple extension wire must be used to connect the EGT probe sensor wires directly to the inputs of the GEA 24/GEA 110/GSU 73. To minimize risk of breakage, it is recommended that a high quality stranded (as opposed to solid) thermocouple wire be used. One such example of appropriate wire TT-K-22S Type K thermocouple wire from Omega Engineering.

Thermocouple extension wire lengths may vary between cylinders for installation convenience; there is no requirement to use the same length of thermocouple extension wire for each engine cylinder. However, for each individual thermocouple lead, the positive and negative wires should be the same length. When attaching thermocouple extension wire with splices or connectors, the connections for an individual pair of positive/negative wires should be located close together to make sure they are exposed to similar ambient temperatures.

4.4.22.1.3 EGT Sensor Installation

General Installation Guidance

Garmin sensors kits include Alcor 86255 Type K thermocouple probes (Garmin P/N 494-70001-00). Refer to Alcor EGT Installation Instructions (P/N 59180) for complete installation details. Engine manufacturer's guidance should be consulted and followed for proper location of EGT probes.

Perform the following steps and refer to figure 4-172, figure 4-173, and figure 4-174 to install an EGT sensor.

1. EGT probes (figure 4-172) should optimally be mounted a minimum 2 inches and a maximum of 4 inches from the cylinder exhaust port flange on a flat portion of the exhaust tube. For highly supercharged engines, the EGT probe should optimally be mounted a minimum 5 inches and a maximum of 7 inches from the cylinder exhaust port flange on a flat portion of the exhaust tube. To maintain consistent readings across cylinders, all probes should be mounted an equal distance from the exhaust flanges.
2. Carefully center punch the probe hole locations so the external portion of the probe does not interfere with any other parts of the engine or cowling (figure 4-173). It may be desirable to angle the probes towards the rear of the engine to allow efficient wire routing back to the cockpit. If angling the probes towards the rear of the engine, take care to make sure that sufficient clearance is provided to service the spark plugs.
3. Carefully insert probe into the exhaust pipe and tighten the clamp snugly with screwdriver (35 in-lbs torque max.).
4. Connect the EGT probes to the thermocouple extension wire. Provide strain relief for the assembly by either fastening the probe leads to the valve covers with a clamp, or by tying the extension wire to the intake tubes or other suitable location. A finger-sized loop should be provided to allow appropriate strain relief, and care should be taken to make sure that no chafing of the wires occurs. Refer to figure 4-174 for an example of an installed EGT probe.

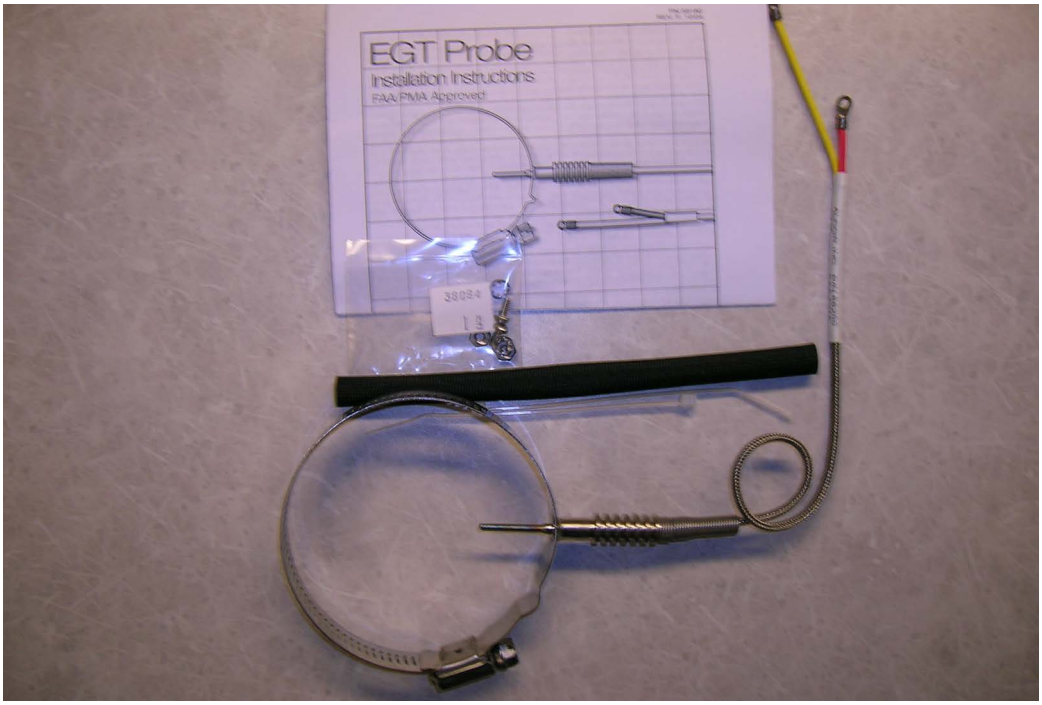

Figure 4-172 EGT Package

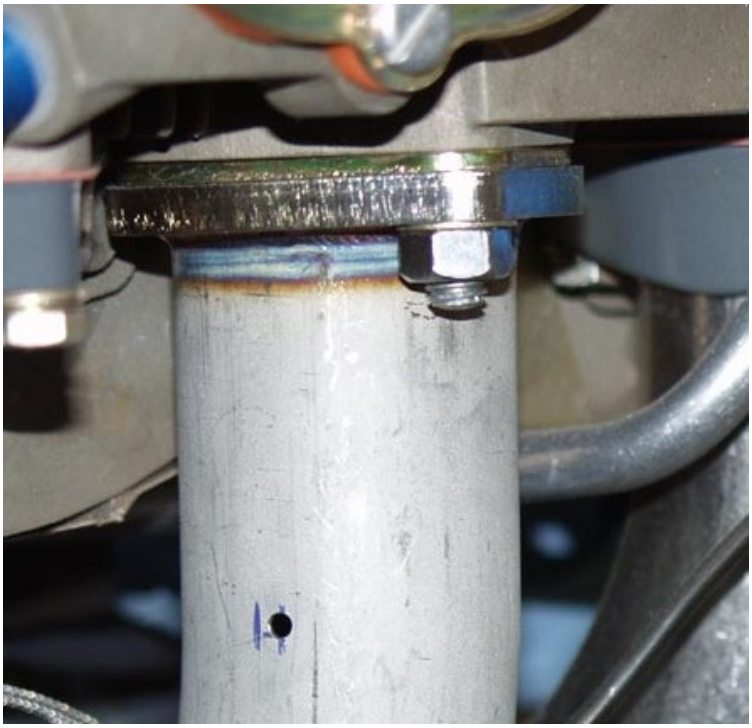

Figure 4-173 Exhaust Pipe Drilled

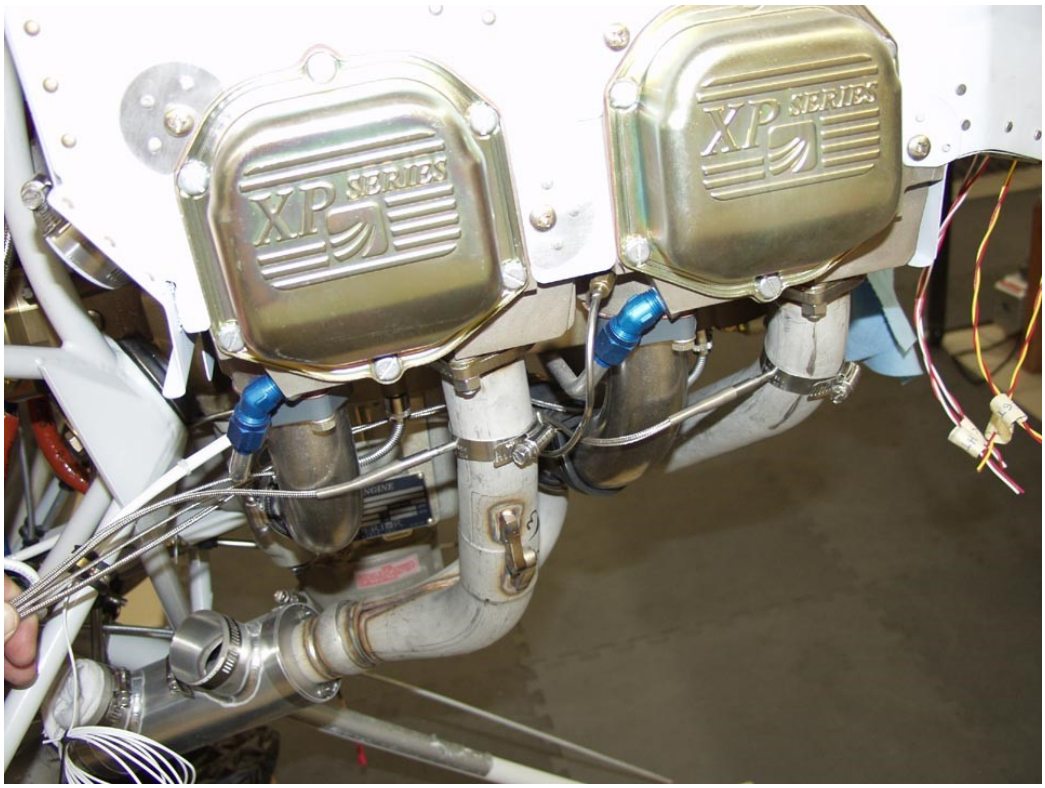

Figure 4-174 Installed EGT Probe Orientation

4.4.22.1.4 Oil Temperature

Oil temperature can be measured using the specific resistance temperature detector (RTD) and thermistor sensors listed in table C-40.

4.4.22.2 Lycoming/Continental Oil Temperature Sensor Installation

Garmin sensor kits for Lycoming and Continental engines include the UMA 1B3-2.5R platinum RTD probe (Garmin P/N 494-70004-00). This probe is designed for oil temperature probe wells with 5/8-18 threads.

General Installation Guidance – Refer to the applicable engine manual for proper location of the oil temperature sensor. The sensor is usually installed near the oil filter.

1. Cut the safety wire and remove the existing vent plug (figure 4-175), if installed.
2. To prevent galling of the threads, apply a small amount of engine oil to the probe threads.
3. Make sure that an unused copper crush gasket is present on the probe, and install the probe into the engine (black side of crush gasket down).

NOTE

Crush gaskets can only be used once. A new gasket must be installed any time the probe is removed and installed.

4. Tighten the probe to the torque as specified by the engine manufacturer.
5. Safety-wire the probe to the engine case as appropriate.
6. Connect the supplied connector to the appropriate inputs on the GEA 24/GEA 110/GSU 73 as referenced in appendix B. Secure the connector and wire assembly to an appropriate location in the engine compartment to provide strain relief.

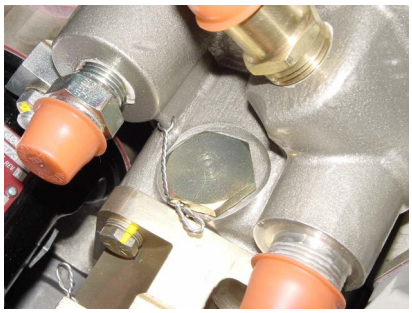

Figure 4-175 Vent Plug

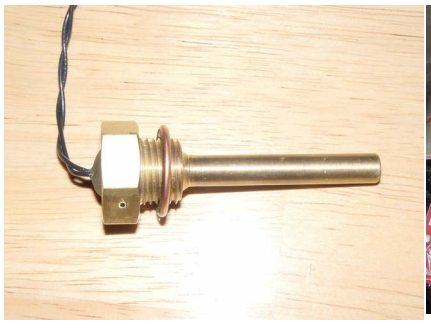

Figure 4-176 Oil Temperature Probe

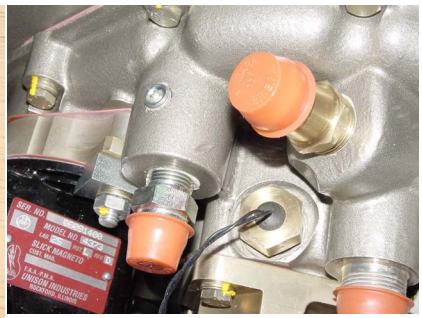

Figure 4-177 Oil Temperature Probe Installed

4.4.22.2.1 Pressure (Fuel, Manifold, Oil, and Coolant)

Select the pressure sensor from table C-40 that is best suited for the aircraft system and installation location. Maximum system operating or surge pressures must not exceed the sensor's rated pressure.

General Mounting Methods – The specified pressure transducers provide for two different mounting options:

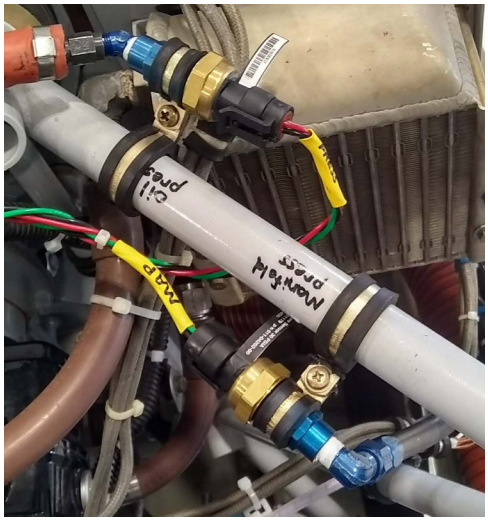

Figure 4-178 Pressure Transducer Mounting

- Sensor body secured to the engine mount or firewall using an appropriately sized Adel clamp (preferred)

  OR
- Mounted to a transducer mounting block located on the firewall. UMA sensor mounting may require the use of a stainless steel AN911 fitting (union).

WARNING

The sensor must not be mounted directly to the engine. Mechanical failure of the sensor could result in leaks and loss of pressure.

WARNING

Test all fuel, oil, and coolant pressure sensors for leakage following installation and before flight.

Installation Guidance

1. Hoses and fittings - Fuel and oil hoses installed in the engine compartment should meet TSO-C53a Type C or D (fire resistant) and rated for the pressure, temperature, and be compatible with the fuel or oil. Sensor hoses must be routed as far away from the aircraft exhaust system as practical and no closer than 6 inches. Fittings should be AN/AS-spec or Mil-spec.
2. Sensors - Do not install sensors directly below fittings or components that may leak flammable fluid. To prevent water from settling in the fuel pressure sensor and causing freeze damage, install sensor with the electrical connector angling upward or with a hose/line with an upward bend that will trap heavier water before entering the sensor.
3. Routing - Line fittings, routing, alignment, bonding, and support spacing should be installed as defined in the aircraft maintenance manual or Section 8-31 of AC 43.13-1B, Aircraft Inspection and Repair
4. Mount the sensor using one of the two methods noted above.
5. Refer to the applicable engine manual to identify the appropriate connecting port on the engine for the parameter being sensed. The male threads on Kavlico sensors are designed to mate with a 1/8" NPT female thread. The female threads on UMA sensors are designed to mate with a 1/8" NPT male thread. Thread sealant or tape should be used for the NPT threads. To reduce the risk of system contamination, a minimal amount of sealant or tape should be applied leaving at least two threads at the end of the fitting clear of all sealant/tape.

WARNING

The fuel and oil pressure fittings on the engine port should have a restrictor hole where appropriate to minimize potential fluid loss in the event of breakage.

NOTE

In some installations, the engine manifold pressure indication may be jittery due to pressure pulses in the intake manifold caused by opening and closing intake valves. Installation of the optional Garmin Restrictor fitting will help to stabilize the indication. The Garmin restrictor (P/N 117-02083-00) will reduce manifold pressure indicator jitter caused by a nearby intake valve. Install the Garmin restrictor into or inline with the same manifold pressure port (i.e., cylinder head or induction system port) as the manifold pressure gauge that is being replaced in accordance with applicable installation guidance, except remove tubing with a vent hole and other restrictors. Do not connect any other equipment to the restrictor.

6. Connect the supplied connector to the appropriate inputs of the GEA 24/GEA110/GSU 73 as referenced in appendix B. Secure the connector and wire assembly to an appropriate location in the engine compartment to provide strain relief.

NOTE

Kavlico P4055 pressure sensors use Packard Metri-Pack 150 connectors.

7. To avoid fuel pressure sensor damage or rupture, verify the aircraft fuel system nominal and surge pressures will not exceed the rated operating pressure of the sensor. Verify that pressure caused by thermal expansion of fuel in the pressure sensor line is not trapped by the fuel shut-off valve or other components.

4.4.22.3 RPM (Revolutions Per Minute)

4.4.22.3.1 Lycoming/Continental RPM Sensor Installation

The following two types of mechanical RPM sensors are supported:

4.4.22.3.1.1 UMA 1A3C-2, UMA 1A3C-4 - Standard Mechanical Tach Drive Sensors

The standard mechanical tachometer drive sensor is installed on the engine accessory case:

1. Remove the cap from the tachometer drive output (figure 4-179) from the back of the engine.
2. Insert adapter tang into slotted keyway in sensor drive port.
3. Screw tachometer sensor onto threaded driver port, verify the adapter tang on the sensor aligns with the slotted keyway in the drive port (figure 4-180).
4. Connect the supplied connector to the appropriate inputs on the GEA 24/GEA110/GSU 73 as referenced in appendix B. Secure the connector and wire assembly to an appropriate location in the engine compartment to provide strain relief.

The body of the sensor unit can be offset slightly to eliminate potential interference with other engine accessories. If the interference cannot be alleviated by offsetting the sensor directly, the installer may either install a magnetic pickup sensor or use a short tachometer drive extension cable to remote mount the sending unit to the engine mount or other suitable location.

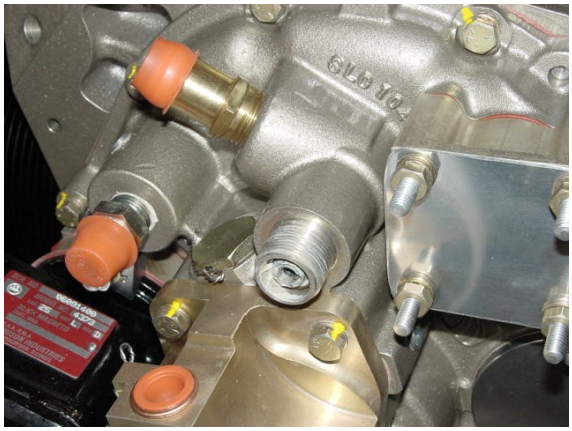

Figure 4-179 Tachometer Drive Output

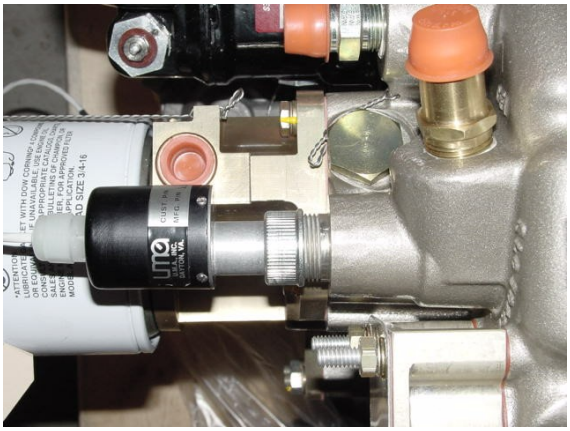

Figure 4-180 Installed Tachometer Sensor

4.4.22.3.1.2 UMA N/T1A9-X, JPI 4208XX - Magnetic Pickup Tach Sensors

The magnetic pickup tach sensor is installed in the magneto bleed port. It is recommended it be installed in the non-impulse magneto, but it can be installed in the impulse magneto if only one magneto exists (engines with single electronic ignition). The UMA N/T1A9-X sensors are suitable for non-pressurized magnetos only. JPI 4208XX RPM sensors are available in different versions for both pressurized and non-pressurized magnetos. Given the bleed port size on Slick and Bendix magnetos differ, the installer should verify the sensor part number is appropriate for the magneto type.

1. Remove the existing vent plug from the magneto bleed port (figure 4-181).
2. Lightly apply thread sealer such as Loctite 242 (or equivalent) to the threads of the sensor. Be careful not to apply too much, and make sure sealer is applied only to the threads and not the pickup face itself.
3. Install the sensor into the port (figure 4-183). The sensor should be installed finger tight plus 1/6 turn. Do not over-tighten.
4. Connect the supplied connector to the appropriate inputs on the GEA 24/GEA110/GSU 73 as referenced in appendix B.
5. Secure the connector and wire assembly to an appropriate location in the engine compartment to provide strain relief.

Figure 4-181 Magneto Bleed Port

NOTE

Attach the Slick/Unison 43xx series magneto (figure 4-182) to the plug closest to the rotating magnet, with the hex-shaped plug.

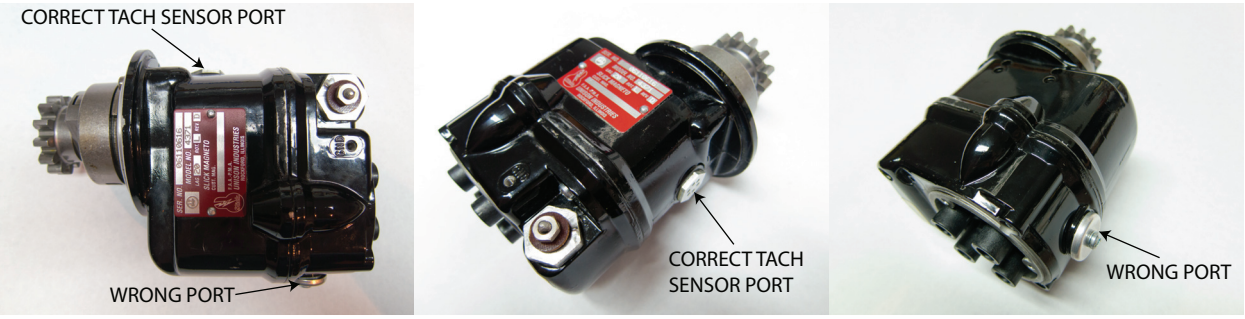

Figure 4-182 Plugs on Slick/Unison 43XX Magneto

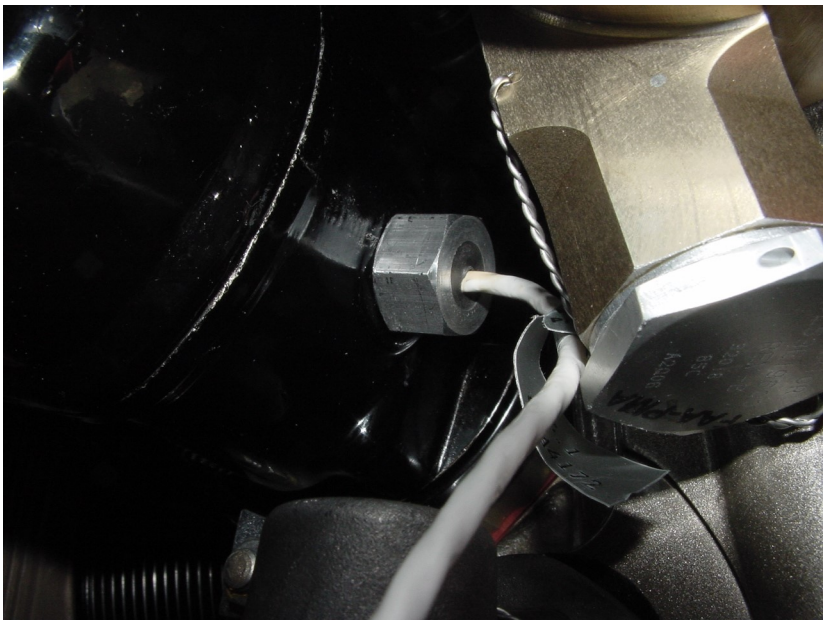

Figure 4-183 Magneto Tachometer Sensor Installed

4.4.22.3.2 Electronic Ignition RPM

For engines with electronic ignition, RPM can be sensed through a digital tach signal output from the electronic ignition system. AXIS flight displays provide configurations for ignition systems that output one through four pulses per crankshaft revolution, or a custom RPM input configuration may be used to accommodate other types of electronic ignition.

Aircraft with dual electronic ignition systems can connect the tachometer signal output from the second ignition to the GEA 24/GSU 73 RPM2 input. Refer to figure B-9.3. The RPM value displayed on the RPM gauge will be the higher of the two RPM signals.

NOTE

Electronic ignition systems with open-collector tachometer signal outputs may require a pull-up resistor between the tachometer signal output and +5VDC or +12VDC.

4.4.22.3.3 P-Lead RPM Sensing

CAUTION

Only a MOD Level 2 GEA 24 or any GEA 24B can be connected to a P-Lead. Do not connect MOD Level 1 or MOD Level 0 units to a P-Lead. The MOD Level status can be determined by checking the serial tag on the unit. If a P-Lead is connected to a non-MOD Level 2 GEA, an "Engine Interface 1 configuration error" System Message will be generated, and configuration status will be reported to be in error in the system information menu.

For a direct connection, the GEA 24 measures the electrical signal generated by the primary magneto coils or "P-Leads" from both engine magnetos. The connections can be made to the magneto P-Lead stud or to the P-Lead wire at the ignition switch. If the magneto does not have a ring terminal stud, connect the GEA 24 to the ignition switch. Otherwise, connect it to whichever minimizes the wire length to the GEA 24.

When making a connection directly to a P-Lead, a 400 kΩ (±10%) resistor needs to be installed. To prevent errant shorts to ground in case of a broken or shorted wire, the wire length between the P-Lead connection and the resistor must not exceed six inches. Shielded wires must be used.

Use a resistor that is 400 kΩ (±10%), 0.5W, rated to maintain resistance and power rating at 150°C, and qualified to MIL-R-10509.

Following the installation of the P-Lead signal wires, verify the continuity of each magneto P-Lead to airframe ground while the ignition key is OFF. If there is evidence of discontinuity in the magneto P-Lead grounding circuit, it must be corrected before further engine maintenance or checks. Continuity can only be measured if the magneto points are open or the wire is disconnected from the magneto. Use a magneto timing light to make sure the ohmmeter will not measure false continuity through the points or coil windings.

WARNING

Do not turn the propeller and stay clear of the propeller arc when installing the P-Lead signal wires.

4.4.22.3.4 Surefly TACH2 Module (P-Lead RPM Sensing)

The SureFly TACH2 module is configured as an electronic ignition when a SureFly Ignition Module (SIM) is installed. The TACH2 outputs a 0-5V rpm signal to the GEA for a SureFly Ignition Module (SIM).

4.4.23 Fuel Quantity

4.4.23.1 Resistive Type Fuel Quantity Sensors

Resistive type fuel quantity sensors with a 0–500 Ω range are currently supported. Wiring methods vary based on the GEA 24/GSU 73 channel being used. Refer to appendix B for proper wiring considerations.

CAUTION

For composite and tube-and-fabric airframe installations that include a GEA 24 (P/N 010-01042-00), it is recommended to install 2 - 2.2 kΩ resistors as shown in appendix B, to improve the grounding path. This is optional for metal aircraft, either wiring method can be used. The additional components have no effect on GSU 73 fuel inputs. When in-line resistors are installed, use "Voltage" configuration setting, if in-line resistors are not installed, use "Resistive" configuration setting. It is not recommended to install these resistors in a GEA24B (P/N 010-02770-00) installation, although they are acceptable if already present.

NOTE

Refer to section J.2.5 for information regarding swapping GEA 24 and GEA 24B units.

4.4.23.2 Capacitive Type Fuel Quantity Sensors

Capacitive fuel quantity sensors require the use of an external transducer to convert capacitance to either a frequency or a voltage.

Fuel quantity transducers that convert capacitance to a voltage of up to 28V may be used, including 0-5V and 0-12V transducers. Examples of this type of transducer include the Skysports and Westach units. Voltage-output fuel quantity transducers may be connected to any of the four fuel quantity inputs on the GEA 24, or to any of the four analog fuel quantity inputs on the GSU 73 (FUEL 1/2/3/4).

Fuel quantity transducers that convert capacitance to a frequency of up to 50 kHz may be used. Examples of this type of transducer include the Princeton, Vision Microsystems, and EI P-300C units. The transducer's output waveform must meet the requirements of the GEA 24/GSU 73 digital inputs. Refer to appendix A. When using a GEA 24, frequency-output fuel quantity transducers may be connected to any of the four fuel quantity inputs (FUEL 1/2/3/4). When using a GSU 73, frequency-output fuel quantity transducers must be connected to the two digital fuel quantity inputs (CAP FUEL 1/2).

NOTE

Vision Microsystems capacitive level senders used with a GSU 73 may require installing a 5 kΩ pull-down resistor at the sensor output.

NOTE

The GEA 24 and GSU 73 can provide +5V or +12V excitation voltage to capacitive fuel quantity transducers. The power supply output pins on the GEA 24 and GSU 73 are designed for low-current transducers only. Transducers that require higher supply currents, including Princeton capacitive fuel quantity transducers, may require power be supplied from the aircraft electrical bus instead.

4.4.24 TIT (Turbine Inlet Temperature) Sensor

The AXIS flight display system supports Type K grounded thermocouples for sensing turbine inlet temperature (TIT), turbine outlet temperature (TOT), or inter-turbine temperature (ITT). This type of sensor is applicable to all turbocharged or turbine engines.

To maintain measurement accuracy, appropriate thermocouple extension wire must be used to connect the TIT probe sensor wires directly to the inputs of the GEA 24/GEA110/GSU 73. To minimize risk of breakage, it is recommended that a high-quality stranded (as opposed to solid) thermocouple wire be used. For Type K thermocouples, one such example of appropriate wire is TT-K-22S Type K thermocouple wire from Omega Engineering. When attaching thermocouple extension wire with splices or connectors, the connections for an individual pair of positive/negative wires should be located close together to make sure they are exposed to similar ambient temperatures.

NOTE

If ungrounded thermocouples are used, the low side must be connected to a GEA 24/ GSU 73 ground pin.

4.4.25 Bus Voltage Monitor

Bus voltage is normally sensed from an external voltage signal connected to a GEA 24/GEA110/GSU 73 analog input (refer to appendix B for interface drawings). Optionally, the GEA 24/GEA110/GSU 73 can be configured to measure bus voltage without requiring an external connection, by sensing the voltage of its power supply inputs. Refer to section 5.5.

4.4.26 Bus Current

Electrical current can be sensed by the AXIS flight display system either by Hall Effect current sensors or through the use of a traditional ammeter shunt.

4.4.26.1 Ammeter Shunt Installation

The UMA 1C4 ammeter shunt included in Garmin sensor kits (Garmin P/N 909-D0000-00) is a 100 Amp/ 50 mV shunt. Other ammeter shunts with different specifications can be supported using calibration adjustments. Refer to section 5.5.

4.4.26.1.1 General Installation Guidance

The ammeter shunt has two holes in the base for mounting with #10 screws. The current-carrying wires are attached to the large 1/4” lugs, while the current sense wires are attached through the use of #8 ring terminals.

Figure 4-184 Ammeter Shunt

NOTE

It is important that no metal portion of the shunt touch any other portion of the aircraft or exposed wiring. Large voltages and current are present in the shunt, and an electrical short or fire could result from inadvertent contact.

The shunt should be installed in-line with the current being sensed. As noted below, the appropriate wire should be cut and attached to each of the large ¼” lugs. A 1A fuse or other form of circuit protection must be installed between the shunt and the applicable GEA 24/GSU 73 inputs to prevent inadvertent damage to the GEA 24/GSU 73. Connect the two sense wires (attached to the #8 terminals) to the appropriate inputs on the GEA 24/GSU 73 as referenced in appendix B. If the ammeter readings are shown with the opposite polarity, check to see if the sense wire connections are reversed.

An alternator ammeter shunt should be installed inline in the alternator output (“B” terminal). A battery ammeter shunt should be installed between the battery positive terminal and the battery contact. Depending on the location of the alternator or battery relative to its supported electrical bus, it is typically desirable to install the shunt on the firewall near where the alternator or battery output would normally penetrate the firewall.

4.4.26.2 Hall Effect Current Sensor

Hall Effect current sensors can be used to sense electrical current through induced magnetic fields, without direct connection to high-current conductors.

The default Hall Effect current sensor supported by the AXIS flight display system is the AMPLOC KEY100. This sensor outputs 2.273V at zero amps, with a sensitivity of 15.9 mV/Amp up to +/- 100A. Other Hall Effect sensors with different specifications can be supported using calibration adjustments. Refer to section 5.5.

4.4.26.3 Electronics International Fuel Flow Sensor Installation

Garmin sensor kits include the Electronics International FT-60 “red cube” fuel flow sensor (Garmin P/N 494-10001-00). Refer to Electronics International document # 1030032 for FT-60 installation guidance.

The default K-Factor for the FT-60 is 68,000 pulses/gallon. No sensor specific calibration is required for the FT-60, but variations in the installation can affect the K-Factor as described above.

Other Electronics International FT-series fuel flow sensors are also supported; consult the manufacturer for installation guidance.

4.4.26.4 Floscan Fuel Flow Sensor Installation

The information below is taken from the Floscan Series 200 Flow Transducer Application Notes:

1. The inlet and outlet ports in Series 200 Flow Transducers have ¼” NPT threads. Use only ¼” NPT hose or pipe fittings to match. When assembling fittings into the inlet and outlet ports, DO NOT EXCEED a torque of 15 ft. lbs. (180 inch lbs.), or screw the fittings in more than two full turns past hand tight WHICHEVER HAPPENS FIRST. Floscan Instrument Co., Inc. will not be responsible for cracked castings caused by failure to use ¼” NPT fittings, over-torquing the fittings, or assembling them beyond the specified depth.
2. A screen or filter should be installed upstream of the flow transducer to screen out debris which could affect rotor movement or settle in the V-bearings. As turbulence upstream of the transducer affects its performance, there should be a reasonable length of straight line between the transducer inlet and the first valve, elbow, or other turbulence producing device.
3. Install the flow transducer with wire leads pointed UP to vent bubbles and make sure the rotor is totally immersed in liquid. For maximum accuracy at low flow rates, the transducer should be mounted on a horizontal surface.

Some additional mounting considerations should be noted as follows:

1. When installing the NPT fittings into the transducer, use fuel lube such as EZ TURN © or an equivalent thread sealer. Teflon tape should NEVER by used in a fuel system.
2. To minimize inaccuracies caused by turbulence in the fuel flow, the sensor should be mounted with approximately 5-6” of straight tubing before and after the sensor. If special circumstances exist that prevent an extended length of straight tubing before and after the sensor, then a gently curved hose may be acceptable. 45 degree or 90 degree elbow fittings should NOT be used immediately before or after the sensor.
3. Specific sensor mounting location is left to the builder. Ideally, the sensor should be placed before the fuel distribution device (carburetor or fuel injection distribution device).
4. On a Continental fuel injected engine, the transducer must be located between the metering unit and the flow divider valve.
5. Sensor wires should be connected to the appropriate inputs on the GEA 24/GSU 73 as referenced in appendix B.

The Floscan 201B-6 (201-030-000) fuel flow sensor K-Factor value can range from 28,000 to 31,000 pulses/gallon.

The AXIS flight display default K-Factor for the 201B-6 is 29,500 pulses/gallon. Some Floscan fuel flow sensors come with a tag that lists the K-factor number measured during unit calibration. Refer to figure 4-185.

NOTE

If the Floscan tag shown in figure 4-185 is lost, the serial number of the Floscan sensor can be supplied to Floscan to obtain the calibrated K-factor value.

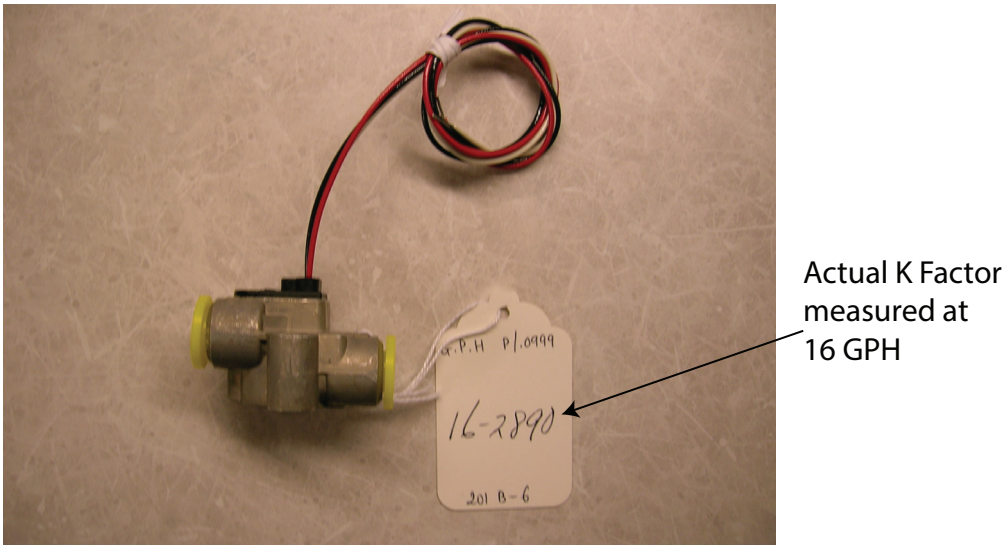

Figure 4-185 Example Floscan Fuel Flow Sensor

The tag shown in figure 4-185 lists a K-Factor of 16-2890. The first two digits (16) represent Gallons Per Hour, while the last four digits (2890) represent the number of electrical pulses (divided by 10) output by the sensor per gallon of fuel flow. The numbers on the tag are used in determining the K-Factor to be entered as part of the Fuel Flow Calibration To find this number, a zero should be added to the four digit number on the tag. In the example above after adding the zero to 2890, the resulting K-Factor to be entered on the Fuel Flow Calibration page would be 28900.

4.4.27 Carburetor Temperature Sensor

4.4.27.1 Lycoming and Continental Engine Sensor Installation

The UMA 1B10R platinum resistance temperature detector (RTD) is applicable to all carbureted Lycoming and Continental engines that accept a temperature probe with ¼-28 threads.

General Installation Guidance:

1. Locate and remove the threaded ¼-28 brass plug (figure 4-186 and figure 4-187) on the side of the carburetor as shown in figure 4-186. If a threaded plug is not present (as is the case with many older carburetors), consult the engine and/or carburetor manufacturer for instructions on how to drill and tap the lead plug adjacent to the butterfly valve.
2. Install a very small amount of thread lubricant on the probe threads and insert into the carburetor (figure 4-188).
3. Connect the supplied connector to the appropriate inputs of the GEA 24/GEA110/GSU 73 as referenced in appendix B.
4. Secure the connector and wire assembly to an appropriate location in the engine compartment to provide strain relief.

Figure 4-186 Carb Temp Sensor Mounting Location

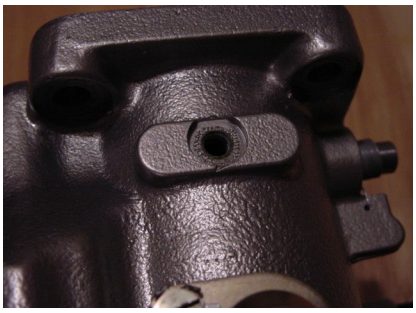

Figure 4-187 Carb Temp Sensor Mounting Location w/ Screw Removed

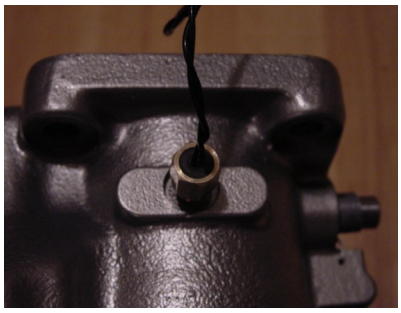

Figure 4-188 Carb Temp Sensor Installed

4.4.28 Position Sensor

In general, most potentiometer-type resistive position sensors can be used with the AXIS flight display system. Typically these sensors take the form of a 0 – 5 kΩ or 0 – 10 kΩ variable resistor. Electric trim motors with integrated position potentiometers do not require separate position sensors.

Each position sensor installation will vary widely according to the aircraft, motion being sensed, and mechanical installation. A standalone position sensor should ideally be mounted so the full travel of the sensor is just slightly greater than the full travel of the control surface.

Refer to the appropriate trim motor or position sensor installation manual and interconnects in appendix B for proper wiring connections. For calibration instructions, refer to section 5.7.

5 SYSTEM CONFIGURATION

5.1 System Configuration Preparation 5-3
5.1.1 Pre-Configuration Checklist 5-3
5.1.2 Wire Harness Mounting, Continuity, and Power Checks 5-3
5.1.3 Update External Navigator, LRU Software, and Assign Network Identity 5-4
5.2 Configuration Mode 5-6
5.2.1 Powering AXIS Flight Displays for the First Time 5-6
5.2.2 To Enter Configuration Mode 5-7
5.2.3 Search 5-7
5.2.4 Bezel Keys and Knobs 5-7
5.2.5 Display Identity Field 5-8
5.2.6 Configuration Mode Applications 5-8
5.2.7 Software Update 5-8
5.2.8 Configuration Sync Icon 5-9
5.2.9 Capturing Screenshots 5-10
5.3 Device Application 5-11
5.3.1 Add Device 5-13
5.4 Settings 5-21
5.4.1 Airframe 5-21
5.4.2 Units of Measure 5-23
5.4.3 G-Meter 5-24
5.4.4 Reference Speeds 5-24
5.4.5 Navigation 5-29
5.4.6 Terrain 5-30
5.4.7 Display 5-31
5.4.8 System Sounds 5-32
5.4.9 PFD 5-35
5.4.10 Audio Panel/Intercom 5-37
5.4.11 COM Radio 5-46
5.4.12 NAV Radio 5-52
5.4.13 Transponder 5-52
5.4.14 GPS 5-54
5.4.15 Radio AGL 5-54
5.4.16 Flaps 5-55
5.4.17 External Lighting 5-56
5.5 A&P (Airframe and Powerplant) 5-57
5.5.1 Gauge Priority 5-58
5.5.2 Sensor Inputs 5-59
5.5.3 Discrete Inputs 5-81
5.5.4 Outputs Tab 5-89
5.5.5 Times & Cycles 5-90
5.5.6 Lean Assist 5-91
5.5.7 Fuel Calculator 5-91
5.5.8 General 5-92
5.6 Autopilot Application 5-95
5.6.1 General 5-95
5.6.2 Flight Director 5-96
5.6.3 Roll Servo Tab 5-97
5.6.4 Pitch Servo Tab 5-97

5.6.5 Yaw Servo Tab 5-98
5.6.6 Trim 5-99
5.6.7 Roll Trim Tab 5-99
5.6.8 Pitch Trim Tab 5-101
5.6.9 Yaw Trim Tab 5-102
5.6.10 ESP 5-104
5.7 CAL 5-106
5.7.1 ADAHRS 5-106
5.7.2 Magnetometer 5-107
5.7.3 Cockpit Lighting 5-108
5.7.4 Display Lighting 5-110
5.8 Diagnostics 5-112
5.8.1 HSDB 5-112
5.8.2 CAN 5-112
5.8.3 RS-232 5-113
5.8.4 RS-485 5-113
5.8.5 ARINC 429 5-113
5.9 Miscellaneous 5-114
5.9.1 Logs 5-114
5.9.2 Video 5-117
5.9.3 Config 5-118
5.9.4 Enable 5-122
5.9.5 Registration 5-123
5.9.6 Bluetooth 5-123
5.9.7 WiFi 5-123
5.9.8 Connection Settings 5-124
5.10 Generic Data Outputs 5-128
5.10.1 Generic ARINC 429 Device 5-128

5.1 System Configuration Preparation

NOTE

It is important to follow the procedures in this chapter, in the order listed.

NOTE

Due to the numerous layout options of the AXIS flight display system, not all information contained in this section may be applicable to every installation.

NOTE

System configuration settings must be verified for the specific build and installation following any software load or update.

5.1.1 Pre-Configuration Checklist

Once AXIS flight display system components are installed on the aircraft and wiring harness installation is complete, the system must be configured for operation. This section contains instructions for configuration and calibration of the AXIS flight display system. The person performing these checks must be familiar with using the following test equipment (all should have current calibration records, as applicable):

- Pitot/static ramp tester
- Digital Multi-Meter (DMM)
- Ground power unit capable of supplying 14/28 VDC power to the aircraft systems and avionics
- Outdoor line-of-sight to GPS satellite signals or GPS indoor repeater
- Digital level or equivalent

5.1.2 Wire Harness Mounting, Continuity, and Power Checks

1. Verify wire harnesses are properly secured and shield grounds are properly grounded to the shield blocks of the connectors, as applicable.
2. Check the movement of the flight and engine controls to verify there is no interference between the cabling and control systems.
3. Ensure all wiring is installed as described in section 4.1.
4. Perform a pin-to-pin continuity check of the AXIS flight display system wire harnesses to expose any faults such as shorting to ground. Correct any faults or discrepancies found before proceeding.
5. Perform power and ground checks to verify proper power distribution to the system LRUs. Any faults or discrepancies should be corrected at this time.
6. Remove power from the aircraft upon completion of the harness checkout.
7. Install the AXIS flight display and supporting equipment.

5.1.3 Update External Navigator, LRU Software, and Assign Network Identity

LRUs listed in table 5-1 must be updated to the specified software versions to ensure successful communication with the AXIS flight display system.

Table 5-1 LRU Minimum Software Versions

LRU	Minimum Software Version
GI 275	3.50
GNC 215	2.31
GPS 175/GNC 355/GNX 375	3.30
GTN Xi	21.11
GTR 205R(x)	2.31
GTS 8X5	3.14.1
GTS 8X0	4.13
GTX	2.90/3.62

The Unit ID for each GTN Xi, or System ID for each GPS 175, GNC 355/355A, and GNX 375 navigator must be set in configuration mode of the unit according to its planned position in the system. Reference appendix C for more information.

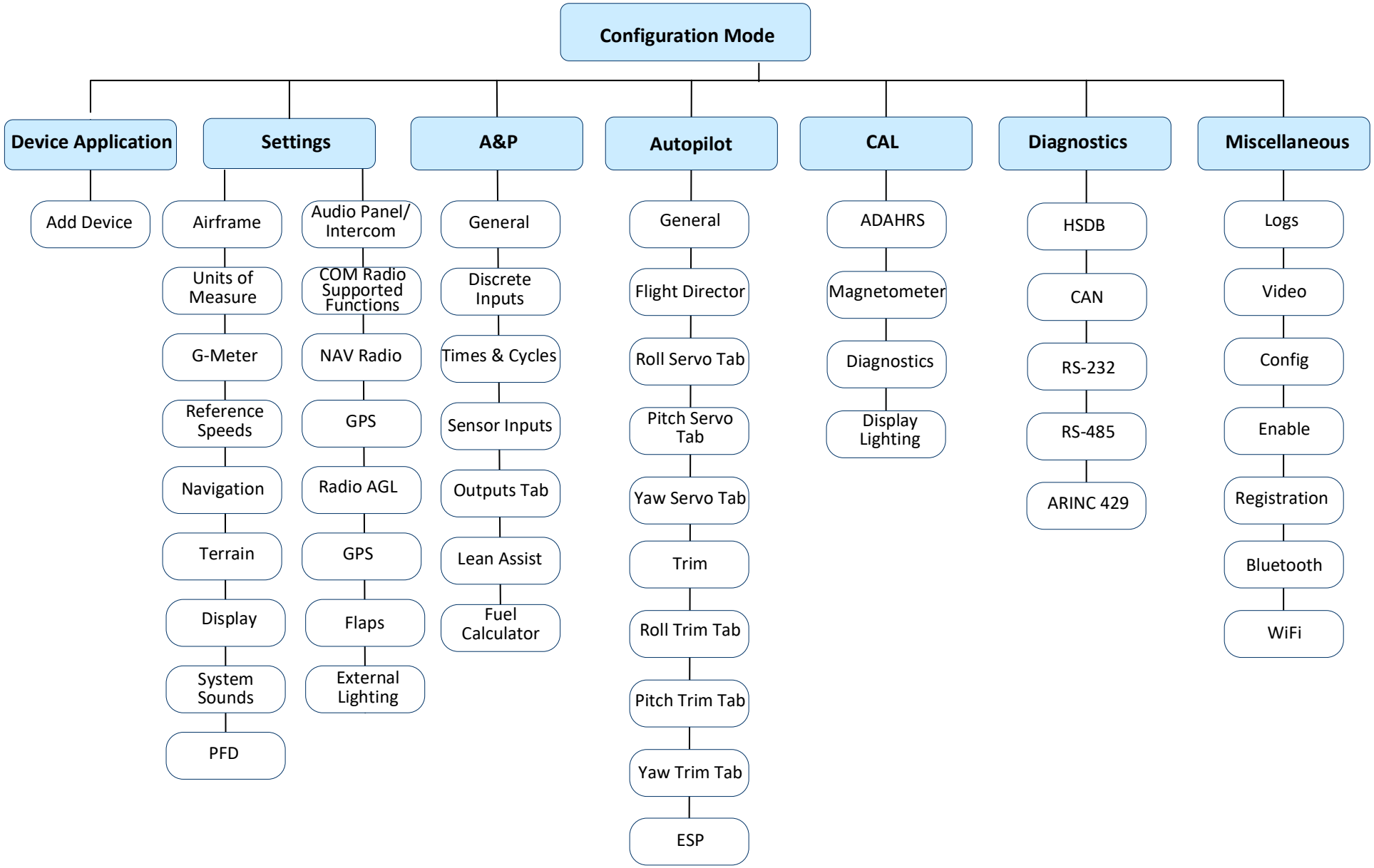

Figure 5-1 System Configuration Map

5.2 Configuration Mode

Use configuration mode to perform configuration, calibrations, and test procedures. A USB-C port is available to transfer system information to a USB stick. A green bar next to a selection indicates the function is enabled.

5.2.1 Powering AXIS Flight Displays for the First Time

The initial factory boot screen requires the installer to specify identity of each display in the system. For each AXIS flight display in the system, program the appropriate settings as follows:

Assign Display Identity

Select the Display Identity associated with the AXIS flight display GDU's position in the instrument panel. PFD1 must be selected for the pilot's primary flight display.

CAUTION

It is critical to assign the correct Display Identity on initial startup. Reference section 3.1.1.3 if unsure of the GDU position and display identity.

System Type

When display identity is set to PFD1, this setting will be populated. Select **EAB** for all experimental installations. Selecting **Garmin STC** or **OEM** will result in reduced system configurability.

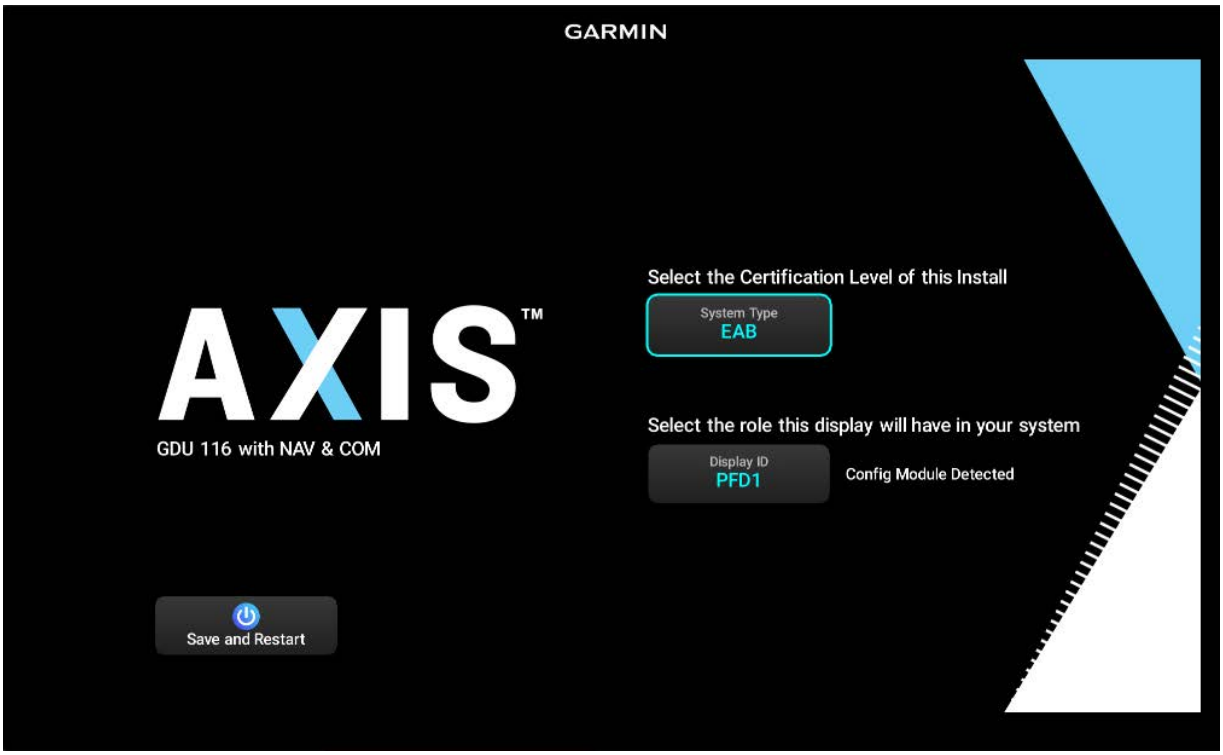

Figure 5-2 System Type Selection

When all settings are correctly set for the installation, touch **Save and Restart** on each display. The display automatically reboots into configuration mode.

5.2.2 To Enter Configuration Mode

Push and hold the **MENU** hard key during initial power up until the Garmin logo displays.

5.2.3 Search

Touch **Search** to find settings and features available in configuration mode.

5.2.4 Bezel Keys and Knobs

Data is accessible by touching fields on the display screen, turning dual concentric control knobs located at the bottom of the unit, or combining them in a touch and turn interface technique.

Turning the left or right outer knob cycles through the various applications on the bottom of the screen (refer to section 5.2.6).

Turning the left or right inner knob cycles through the various tabs, on each selected application. Pushing the knob changes the focus of the inner knob to the content within the tab. Push the knob again to select specific settings and modify them.

Figure 5-3 Bezel Keys and Knobs

Push **BACK** to return to the previous screen.

Push **MENU** to display the configuration mode context menu. Options are dependent on configuration and may vary based on the active configuration mode page.

Brightness Control

Allows the display brightness control to be toggled between *Lighting Bus*, *Auto*, or *Manual*. When set to *Manual*, the brightness can be set directly using the slider. When set to *Auto*, the displays photocell dictates screen brightness, based on ambient lighting.

NOTE

Lighting bus is only available when configured later in this chapter. Use Auto or Manual for initial system configuration.

Uncommon Actions

The uncommon actions menu contains the following items:

- **Clear System Config:** Reset the display to factory defaults. This would be used in the case that the equipment is being transferred to a different installation. Refer to section J.3.3.4 for more information.
- **Enable/Disable Installer Mode**: For experimental aircraft, this can be left enabled at all times. If disabled, AOA calibration and AFCS Gain settings will be hidden from normal mode. This can be completed after the installation is complete, if desired, to declutter the normal mode settings menu.
- **Change Display ID**: In the case the Display ID needs to be changed, use this function. This should only be used in the case of an installation error, or if the installer wishes to reassign the display from a PFD to MFD, or vice versa. Refer to section J.3.3.3 for more detailed information, as changing display identity has system wide implications.

Save and Reboot

Saves the current configuration and reboots the display. Select *Config* or *Normal* and touch **Restart**.

5.2.5 Display Identity Field

The display identity, as selected in section 5.2.1 is displayed at the top of each display while in configuration mode.

NOTE

The Display ID field will flash in the case of a display ID conflict. This occurs when any Display Identity has been assigned to more than one display in the system. This can be corrected using the Change Display ID function described in section J.3.3.3.

5.2.6 Configuration Mode Applications

Open a configuration mode application by tapping the associated icon at the bottom of the screen.

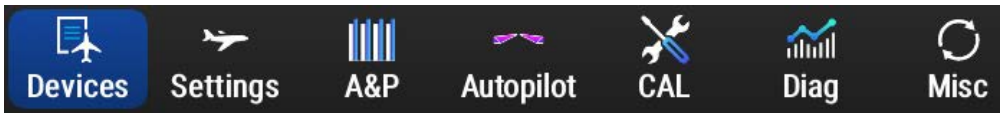

Figure 5-4 Icons

5.2.7 Software Update

Before continuing with the initial configuration of the system, it is important to update the software on PFD1 to the latest available version. This will ensure the content that follows in this installation manual is accurate to the options presented in AXIS configuration mode.

NOTE

Only use this software update procedure for initial installation. For routine system software updates after initial installation, use the procedure described in section J.4.

This software package includes software for remote system LRUs, which will be automatically propagated to the rest of the system displays and LRUs as they are added to the system in the sections that follow in this chapter.

Procedure for completing software update during initial system installation:

1. Create a loader card per section J.4.1.
2. Connect external power to the aircraft to energize the aircraft and avionics electrical buses.

CAUTION

Do not rely on the aircraft battery to load software. Do not use a battery charger as an external power source. Power loss during a software update may cause an LRU to become corrupted and unresponsive requiring replacement.

3. Insert USB-C with up-to-date software package loaded to the card, into PFD1.
4. Power on PFD1 in configuration mode. When the system has processed the software package loaded to the USB-C drive, a popup displays.
5. Touch **OK**.

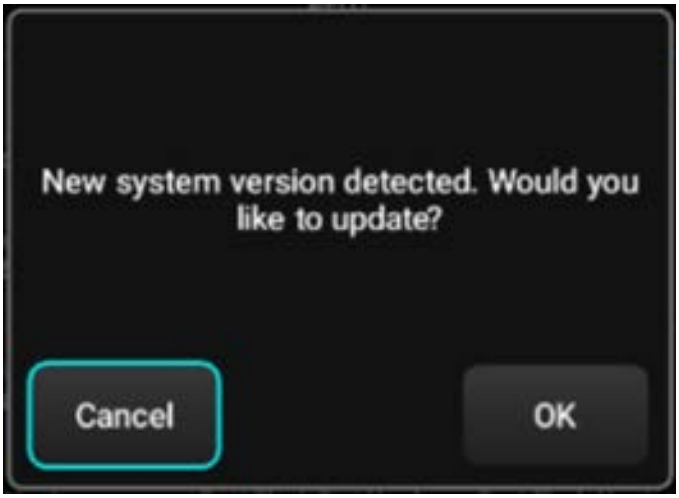

Figure 5-5 Software Version Pop-up Window

6. Touch **Update** on the resulting software update page. This loads the AXIS Version from the USB-C drive, to PFD1. Once the progress wheel reaches 100%, the display will reset and reboot into configuration mode.
7. After rebooting, touch **Summary** to verify software levels.

CAUTION

Ensure power is not removed while any update is being performed.

Figure 5-6 Software Update Page

5.2.8 Configuration Sync Icon

NOTE

Do not remove power from the system while the disk icon is shown. Loss of configuration data may result.

A small hard disk icon (figure 5-7) displays in the top left corner in response to changing configuration settings. This represents a short period of time when the system is saving the change.

Figure 5-7 Hard Disk Icon

5.2.9 Capturing Screenshots

Screenshots can be captured and saved to a USB-C drive on an AXIS flight display with the following procedure. Images will be saved to a “Print” folder on the drive.

1. Insert a USB-C drive into the port on the front of the AXIS flight display. Wait a few seconds for the display to recognize the device.
2. On the desired screen, press and hold either **MENU** key for approximately two seconds.
3. Text will appear at the bottom of the display indicating that a screenshot was saved to USB. Some configuration windows being open may obscure the text. This will not affect the screenshot being saved.
4. After all desired images have been captured, remove the drive.

5.3 Device Application

The Devices Application can only be accessed from the display in the system assigned PFD1and serves two distinct purposes:

1. Used at the beginning of the configuration process to establish the network of the system, a task which includes selecting which system LRUs exist in the system, how they are connected to the system (RS-232, HSDB, CAN bus, etc.,) and if applicable, what position they occupy.
2. After initial system configuration is complete, the Devices Application serves as an “at a glance” view of the health of the system.

NOTE

When the system is powered for the first time, the Devices Application automatically displays an entry for PFD1. Use the settings described in section 5.3.1.1 to make any necessary changes to the options for PFD1.

Figure 5-8 Device Application

Each tab on the left hand side of the display represents a system LRU, including a tab for each AXIS display in the system. The Add Device function must be used to add each LRU, including all AXIS displays besides PFD1, to the system (section 5.3.1).

NOTE

Some tabs represent multiple related LRUs. Individual LRU information can be viewed by touching the tab and scrolling through the device rows on the adjacent pane.

When all LRUs have been added to system, the icons on each tab can be used to quickly identify any issues present with a given LRU.

- When a system LRU is powered, communicating with the AXIS flight display system, and no errors are detected, a green check mark will be displayed next to the LRU.
- If the LRU is reporting a fault of any kind, including a wiring error, an amber caution icon will be displayed.
- When the LRU is not communicating with the display, a white question mark is displayed.

Table 5-2 Status Indication

Icon	Description
	The LRU is communicating with the AXIS flight display and there are no faults present.
	There is a fault occurring with the LRU.
	The LRU is not communicating with the AXIS flight display.

In the case a system LRU tab is displaying a caution icon, there are numerous potential causes. Touching the tab provides an expanded set of data fields relevant to the LRU, which can help identify exactly what problem is driving the amber caution icon, which can include:

Software Version

White text indicates the software version reported by the associated LRU matches what the AXIS system expects it to be. If there is a mismatch between the two, the software version is presented in yellow. If for any reason, a software version has been deleted or corrupted on the LRU, the field will reflect the missing status.

Network Status

If a system LRU is connected to the AXIS system via CAN or HSDB, a dedicated field exists for the network status of the LRU. If the LRU is not communicating with the AXIS system using the specified data path, an amber caution icon is displayed.

Port Status for RS-232, ARINC 429 and RS-485

The port status fields provided in the Devices Application provide an indication of the state of each data port, using text color.

- White text is indicative of a normally operating connection.
- Amber text represents a data path which is required to communicate with the specified LRU, for which the user has not selected a port.
- Red text is indicative of the lack of data received on a configured port.

NOTE

If a port is not selected for optional connections, no port status is populated on the associated Device application tab.

SDI Field

If the SDI field of a ARINC 429 port is amber, the system is receiving data on the configured ARINC 429 port, however the SDI being sent by the interfacing equipment, does not match what is expected by the AXIS display.

5.3.1 Add Device

To add a system LRU to the device list:

1. Touch **Add Device**.
2. Select the LRU to configure (e.g., GTN 750 Xi).
3. When applicable, the device “Add” window will open. In many cases, this page allows the installer to specify which ports on the AXIS flight display(s) the LRU is connected to or which position the LRU occupies (e.g., COM1 vs COM2).
4. Configure the LRU settings per the applicable section in appendix C.

NOTE

Refer to section 5.3.1.1 through section 5.3.1.4 for descriptions of the settings that can appear in a device's modify page.

5. Touch **Add** when finished.
6. To return to the device's Modify window or remove the LRU from the system, select the device’s tab from the left column and touch **Modify**.

NOTE

If a position conflict exists (COM1 vs COM2), it may be necessary to remove one of the LRUs, to resolve the conflict. In the case of a conflict, follow on-screen prompts.

NOTE

The process of adding a device may be repeated in some cases. For example, up to two G5 Standby Flight Displays (SFD) can be installed in an AXIS flight display system. In this case, use the Add Device process two times to first establish SFD1, and then SFD2.

NOTE

It is generally best practice to add all displays in the system first, and then any GSU 73 or GAD 29 that exists in the system, before adding the remaining LRUs in the system.

NOTE

When the system determines the software on an external LRU does not match the version expected by the system, it will command an update to that LRU. As LRUs are added to the system, you may be prompted to accept updates to individual LRU software.

5.3.1.1 AXIS Display

When AXIS Display is selected from the Add Device list, first select the appropriate Display Identity.

NOTE

It is important to select the correct display identity for the AXIS flight display being added to the Device List. This must match the display identity selected on the initial boot cycle of the interfaced display, as described in section 5.2.1. If Display Identity was entered in error, see the procedure described in section J.3.3.3 to change this value.

Configure the following settings as applicable:

Display Variant

Select *Base*, *COM* or *NAV/COM*, depending on the hardware variant of the display being added to the Device List.

Internal VHF COM Receiver Enable State

Select *Enable* to assign the COM radio internal to a GDU 116C as a COM radio in the system. Available only for GDU 116C units.

COM Position

Select *1* or *2*. This assigns the COM radio internal to a GDU 116C as COM1 or COM2 in the system. If an external audio panel is in use, this position should match the position to which the audio wiring of the AXIS COM radio is connected.

NAV/COM Position

Select *1* or *2*. This assigns the NAV/COM radio internal to a GDU 116NC as NAV1/COM1 or NAV2/COM2 in the system. Available only available for GDU 116NC. If an external audio panel is in use, this position should match the position to which the audio wiring of the AXIS COM and NAV radio is connected.

Internal Audio Panel Enable State

Select *Enable* if the internal audio panel of a GDU 116C or GDU 116NC is to be used as the audio panel device in the system.

Select *Disable* if an external GMA audio panel or other Intercom device (ICS) is the audio device for the system.

Internal GPS Enable State

NOTE

A GDU 116C or GDU 116NC display will occupy the lowest IFR GPS position, not occupied by an external IFR GPS navigator. If no IFR GPS position is available, the display is assigned a VFR GPS position. If two GDU 116C or GDU 116NC displays occupy IFR GPS positions, the GPS position matches the configured COM position.

Select *Enable* if a GPS antenna is connected to the display.

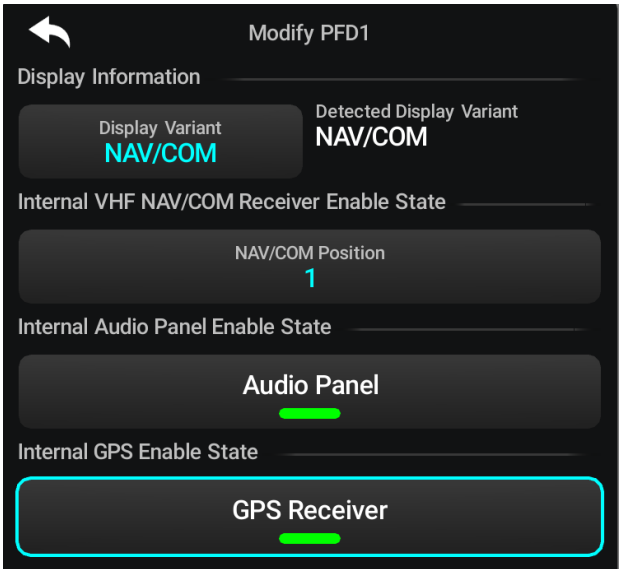

Figure 5-9 AXIS Display Page

5.3.1.2 Other Modify Page Fields

This section describes the types of fields which may appear on a device's Modify page.

System ID or Unit ID

NOTE

If applicable, match the System ID to the audio position which the COM and NAV portions of an interfacing LRU occupy on the audio panel device in the system.

The System ID field on a modify page represents what position the LRU will occupy in the system. For an interfaced GPS/NAV/COM, a System ID of 1, will result in the assignment of positions GPS1/NAV1/COM1.

- For a HSDB or CAN LRU, the System ID field must match the System ID field set on the interfacing LRU, either via the interfacing unit's configuration mode selection, or a connector pin identity strap.
- For ARINC 429/RS-232-based navigators like GNS 4XX/5XX and GTN Series navigators, the System ID corresponds to the SDI expected by the ARINC 429 data received from the interfaced navigator.
- For strictly RS-232-based units, like the SL30, System ID assigns the COM or NAV/COM position of the unit. No specific configuration of the interfacing unit is required.

Connection Type

Some LRUs have multiple options for connection to the system. Select *HSDB*, *CAN* or *Serial*, as appropriate to the chosen method for wiring.

ICS Enable State

Select *Enabled* if the internal intercom of the specified unit is used as the audio intercom device in the system. This is not a function that is used if an audio panel exists in the system.

RS-232 Port Selection

Specify which RS-232 port in the AXIS system the interfacing LRU is connected to.

ARINC 429 Input Port Selection

Specify which ARINC 429 input port in the AXIS system the interfacing LRU is connected to for the required connection.

NOTE

A GAD 29, GSU 73, GDU 116C, or NC must be added to the system for ports to be selectable for these units.

ARINC 429 Output Port Selection

Specify which ARINC 429 output port in the AXIS system the interfacing LRU is connected to for the required connection.

ARINC 429 Output SDI

A configurable SDI is associated with an ARINC 429 output port. This assigns the Source Destination Indicator (SDI) of the outgoing data stream from the AXIS flight display system.

Rotax CAN

Select *Single CAN* or *Dual CAN*. Dual CAN is used if the second CAN interface on a GEA 24 is used for redundant connections to a Rotax FADEC unit.

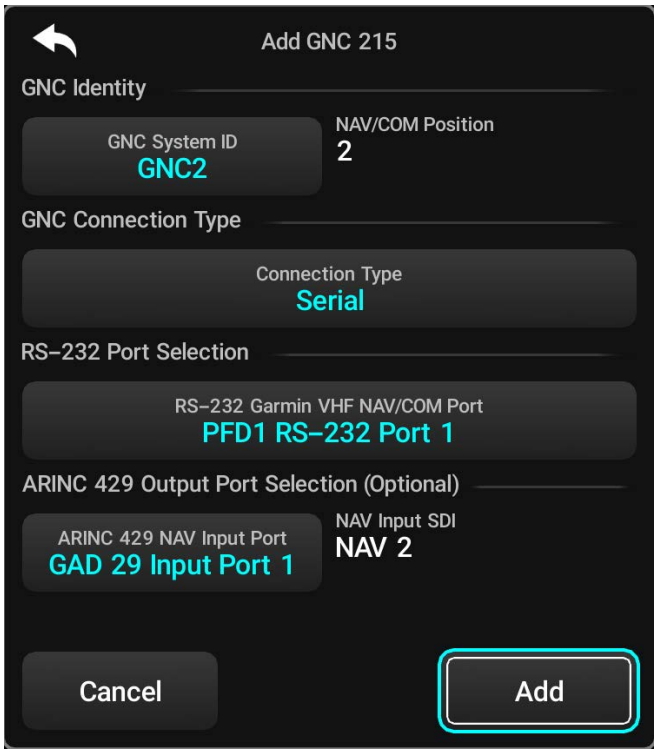

Figure 5-10 Other Modify Page Fields

5.3.1.3 GSU 25

NOTE

Up to three ADAHRS devices can be installed in an AXIS flight display system. The first device added will be assigned position #1. This will correspond to the pin ID strap on the ADAHRS unit connector. Refer to section A.2.4.

Configure the following settings as applicable:

Magnetometer

Select the magnetometer associated with the specified position. A magnetometer is required for ADAHRS 1 and is optional for ADAHRS 2 and 3. Only configure a #2 or #3 magnetometer in the uncommon case that a second or third magnetometer is installed in the system.

OAT Source

Only applicable to a GSU 25 assigned position 1. A GAD 13 OAT Module can optionally be specified as the OAT source. In most cases, the OAT probe is connected to GSU 25 #1, select GSU 25 in this case.

AOA

Select *Enabled* if a pneumatic connection to an AOA probe is present on the specified unit.

Backup Path Port (Optional)

Specify which RS-232 port on the AXIS flight display the optional GSU 25 backup datapath is connected to.

5.3.1.4 GFC 500X

NOTE

When the GFC500X is added to the system, the roll servo automatically enables.

Configure the following options as applicable:

Autopilot Pitch Servo

Select *Enabled* if a GSA 28 Primary Autopilot Pitch Servo exists as part of the autopilot installation.

Autopilot Yaw Servo

Select *Enabled* if a GSA 28 Primary Autopilot Yaw Servo exists as part of the autopilot installation.

Roll Trim Servo

Select *Disabled* if no Roll Trim servo or motor exists as part of the autopilot installation. Select *DC Trim* if a DC trim motor is wired to the trim output of the GSA 28 Primary Autopilot Roll servo. Select *GSA 28* if an additional GSA 28 has been installed, dedicated as a Roll Axis Trim servo.

Pitch Trim Servo

Select *Disabled* if no Pitch Trim servo or motor exists as part of the autopilot installation. Select *DC Trim* if a DC trim motor is wired to the trim output of the GSA 28 Primary Autopilot Pitch servo. Select *GSA 28* if an additional GSA 28 has been installed, dedicated as a Pitch Axis Trim servo.

Yaw Trim Servo

Select *Disabled* if no Yaw Trim motor exists as part of the autopilot installation. Select *DC Trim* if a DC trim motor is wired to the trim output of the GSA 28 Primary Autopilot Yaw servo.

Mode Controller 1

Select GMC 507, GMC 305 or GMC 307. If no Autopilot mode controller is included in the installation, set to None.

If a GMC 507 Autopilot Mode Controller is assigned position 1 exists in the system.

If GMC 305 or 307 is selected for Mode Controller 1, specify which RS-232 port on the AXIS flight display the GMC 305/307 is connected to.

Mode Controller 2

Only available if a GMC 507 is selected as Mode Controller 1. Set to enable if a second GMC 507 is installed in system.

5.3.1.5 GEA 110

NOTE

RS-485 from a GEA 110 can only be connected to the RS-485 inputs on a GDU 116C or GDU 116NC.

Configure the following settings as applicable:

On-Side Display

The on-side display setting allows the user to specify which display in the system is the primary interface for the GEA 110. The primary display is connected to the GEA 110 using one RS-485 connection. A second RS-485 connection can be made to the primary display or a second cross-side GDU 116C or GDU 116NC in the system, to serve as a backup data path.

RS-485 Port Selection

Specify which RS-485 port in the AXIS system the interfacing LRU is connected to, for each of the specified connections. The user must select any RS-485 port on the selected On-Side display for the primary connection and may optionally select any RS-485 in the system as the backup port.

5.3.1.6 GSU 75

NOTE

ARINC 429 from a GSU 75 can only be connected to the ARINC 429 inputs on a GDU 116C or NC. Refer to figure B-1.6 for detailed interconnect information.

Configure the following settings as applicable:

On-Side Display

The on-side display setting allows the user to specify which display in the system is the primary interface for the GSU 75. The primary display is connected to the GSU 75 using two RS-232 connections, and one ARINC 429 connection. A second ARINC 429 connection can be made to a second cross-side GDU 116C or GDU 116NC in the system.

RS-232 Port Selection

Specify which RS-232 Port in the AXIS system the interfacing LRU is connected to, for each of the specified connections. The user may select any RS-232 port on the selected On-Side display.

ARINC 429 Input Port Selection

Specify which ARINC 429 input port in the AXIS system the interfacing LRU is connected to for each of the specified connections. The user may select any ARINC 429 port on the selected On-Side display for the Primary Input port. If a second GDU 116C or NC exists in the system, a second ARINC 429 port may be selected on the cross-side display.

5.3.1.7 FADEC

Add a FADEC device to the system if present. Options include *Rotax FADEC*, *ULPower FADEC*, and *Lycoming FADEC*.

Rotax CAN

Select *Single CAN* or *Dual CAN*. Dual CAN is used if the second CAN interface on a GEA 24 is used for redundant connections to a Rotax FADEC unit.

5.3.1.8 ELT

Select a port format, *NMEA 4800*, *NMEA 9600*, or *Aviation Out*. The correct port format depends on the requirements of the ELT interfacing to the AXIS system, and may depend on hardware configurations of the ELT LRU. Once a port format is selected, specify which RS-232 port in the AXIS system the interfacing LRU is connected to.

5.3.1.9 Generic Serial Device and Generic A429 Device

These options can be used to provide various RS-232 and ARINC 429 outputs from the AXIS system, to provide data to 3rd party, non-integrated devices. Specify which port in the AXIS system the interfacing LRU is connected to, for the selected port format.

5.4 Settings

Touch **Settings** to configure the following:

- Airframe
- Units of Measure
- G-Meter
- Reference Speeds
- Navigation
- Terrain
- Display
- System Sounds
- PFD
- Audio Panel
- COM Radio
- NAV Radio
- Transponder
- GPS
- Radio AGL
- Flaps
- External Lighting

5.4.1 Airframe

5.4.1.1 General

System Type

Must be set to EAB.

Number of Engines

Select *Single Engine* or *Twin Engine* as equipped.

NOTE

A GEA EIS LRU identified as #2 must be present for twin engine to be available.

Aircraft Type

Select *Fixed Wing* or *Rotorcraft*, as applicable.

Map Symbol

Sets how the aircraft will be displayed on the map. Select one of the following appropriate icons to match the aircraft type: *Low Wing*, *High Wing*, *Jet*, *Canard*, *Twin Engine*, *Sport Plane*, *Tailwheel*, *Helicopter*

Aircraft Registration

Enter valid tail number.

Aircraft is Pressurized

Enable this setting if the aircraft is pressurized.

Fuel Type

Set the Fuel Type to match the aircraft. Options are *AVGAS*, *JET-A*, and *Diesel*.

5.4.1.2 Aircraft Dimensions

NOTE

If a remote transponder is configured "Airframe Dimensions" display on Settings page.

Aircraft Length

Enter the physical length of the aircraft.

Aircraft Width

Enter the physical width of the aircraft.

Maximum Takeoff Weight

Enter the maximum takeoff weight of the aircraft.

5.4.1.3 Performance Options

Minimum Runway Length

Select the shortest acceptable landing distance during normal operations, as typically determined in Phase 1 testing.

Minimum Runway Type

Select the type of runway surfaces acceptable for landing during normal operations, as typically determined in Phase 1 testing.

Emergency Runway Type

Select the type of runway surfaces acceptable during an emergency landing.

Desired EMER Runway Length

Select minimum length for longest runway at destination airports, below which the runway is penalized by the emergency landing airport selection algorithm.

Aircraft Max Speed

Select the maximum speed of the aircraft, for position reporting purposes. Vne as referenced by the airspeed indicator is configured later in this chapter.

Desired EMER Max Gust Speed

Select the maximum desired gust speed at destination airports, above which the airport is penalized by the emergency landing airport selection algorithm.

5.4.2 Units of Measure

Set the units of measure per the POH.

Table 5-3 Units of Measure Settings

Setting	Selection
PFW and Navigation Units	
Speed and Distance	• Nautical Miles/Knots/Feet • Statute Mile/MPH/Feet • Kilometers/KPH/Meters
Altitude and Vertical Speed	• Feet/FPM • Meters/MPS
Location Format	• LAT/LON DDD.DDDDD° • LAT/LON DDD°MM.MM’ • LAT/LON DDD°MM’SS.S” • MGRS • UTM
Temperature Units	
Air Temperature Pilot Selectable	Set to enable (green bar) to allow pilot to modify this setting from normal mode.
Air Temperature	• Fahrenheit • Celsius
Engine Temperature	• Fahrenheit • Celsius
Fuel Units	
Fuel Quantity	• Gallons • Imperial Gallons • Kilograms • Liters • Pounds
Fuel Flow	• Gallons per Hour • Imperial Gallons per Hour • Kilograms per Hour • Liters per Hour • Pounds per Hour
Fuel Economy	• Kilometers per Liter • Statute Miles per Gallon • Nautical Miles per Gallon • Nautical Miles per Imperial Gallon
Fluid Units	
Fluid Quantity	• Gallons • Imperial Gallons • Liters
Fluid Pressure	• Pounds per square inch • Kilopascals • Bar

Setting	Selection
Airframe Units	
Power	• Horsepower • Kilowatts
Weight	• Kilograms • Pounds
Pressure Units	
Barometric Pressure	• Inches of Mercury • Hectopascals • Millibars

5.4.3 G-Meter

Set the G-Meter settings, if applicable.

Maximum Gs

Set to G-Meter maximum value (between 0 and 10).

Minimum Gs

Set to G-Meter minimum value (between -10 and 0).

Automatic Display

Enable to allow the G-Meter to automatically be displayed with no pilot option to display in place of the HSI.

Gauge Markings

Enable to display markings on the G-Meter. Configure the Positive and Negative Red and Yellow Lines.

5.4.4 Reference Speeds

5.4.4.1 V_{NE} (Indicated)

WARNING

Some aircraft have maximum speed limitations that cannot be fully depicted by a fixed V_{NE} red line on the airspeed indicator. These aircraft may have a placard that specifies any such additional speed limitations. If the AXIS flight display cannot be configured to clearly depict all airspeed limitations, use alternate means to inform the pilot of these limitations.

The aircraft's maximum airspeed limit can be configured in three different ways. All aircraft have a maximum indicated airspeed limit (V_{NE}) which is configured using the V_{NE} (Indicated) field. This airspeed is marked on the PFD airspeed tape with a red line and does not change with altitude. For example, the value for V_{NE} has been entered as 205 knots indicated airspeed. The aircraft is below the never-exceed speed any time its indicated airspeed is below 205 knots.

5.4.4.2 Glide Information

NOTE

The following glide information must be configured in order to enable features like the Glide Range Ring and Smart Glide in your AXIS flight display system.

NOTE

If more than 1 value for Vg (best glide speed) is specified in your AFM/POH, use the best glide speed that corresponds to the highest maximum weight condition (i.e. Vg at Gross Weight).

NOTE

For fixed wing aircraft, the Best Glide Speed yields the smallest altitude loss for a given horizontal distance traveled. AXIS flight display systems use this value, as well as the Sink Rate at the Best Glide Speed, to provide features like Smart Glide. Pilots should be aware that the Minimum Rate of Sink occurs at a different airspeed (NOT at Best Glide Speed, typically slower), and provides the pilot the longest time in air. Every emergency situation is unique and pilots must use sound judgment and select an airspeed and aircraft configuration that appropriately matches the situation.

The following section discusses how to configure glide information in AXIS flight display systems. When first configuring the system, only the "Vg (Best Glide Speed)" field is available for modifying and remaining fields are grayed out. These fields will be available for configuration after entry of aircraft's Best Glide Speed.

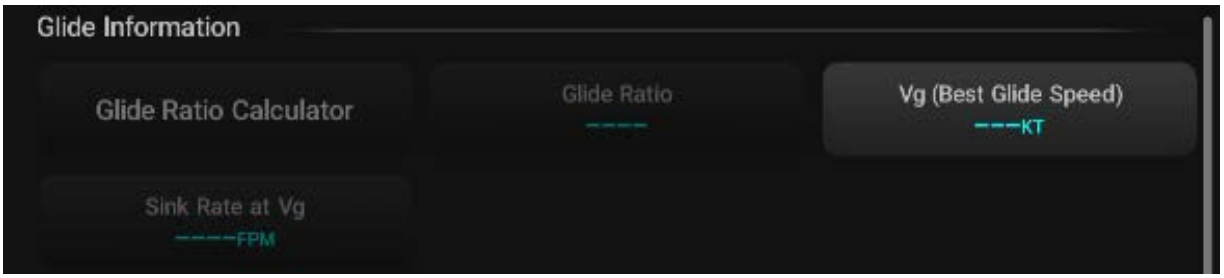

Figure 5-11 Glide Information Before Configuration

5.4.4.2.1 Vg (Best Glide Speed)

Enter aircraft's best glide speed in this field. For many aircraft, the manufacturer has published this information in the Airplane Flight Manual (AFM)/Pilots Operating Handbook (POH). The best glide speed is a function of aircraft weight. The higher the aircraft weight, the higher the best glide speed. Because best glide speed changes with weight, some manufacturers will publish multiple best glide speeds as a function of aircraft weight. In this scenario, use the best glide speed value for the maximum aircraft gross weight.

If there is no published Best Glide Speed data for your aircraft, refer to section 5.4.4.7.

5.4.4.2.2 Glide Ratio and Sink Rate at Vg

Once you have entered the Best Glide Speed, the “Glide Ratio” and “Sink Rate at Vg” fields will become available for entry. Note that these two items are directly correlated. If you enter a Glide Ratio value, then the Sink Rate at Vg will automatically populate. Likewise, if you enter a value for Sink Rate at Vg then the Glide Ratio field will also automatically populate. Many AFM/POH will only provide information for the Sink Rate at Vg (most common), or Glide Ratio (less common) - but rarely both. Therefore the AXIS flight display system will use whichever value is provided to calculate the other value.

Sometimes the available published data doesn't clearly declare either of these values (Glide Ratio or Sink Rate at Vg). Some manufacturers will instead provide a chart that shows vertical distance descended for every horizontal mile flown. An example of this can be seen in figure 5-12. Other times, a manufacturer will simply provide a general rule-of-thumb glide information statement. Refer to figure 5-13.

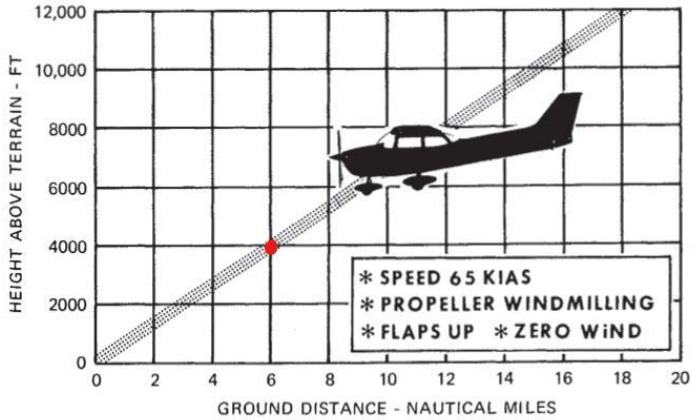

Figure 5-12 Example Glide Chart from Cessna 172 AFM/POH

MAXIMUM GLIDE CONFIGURATION

1. Landing Gear - UP
2. Flaps - UP
3. Cowl Flaps - CLOSED
4. Propeller - PULL for LOW RPM
5. Airspeed - 110 kts/127 mph

Glide distance is approximately 1.7 nautical miles (2 statute miles) per 1000 feet of altitude above the terrain.

3-6 **August 1982**

Figure 5-13 Example Glide Information Statement from Bonanza A-36 AFM/POH

For situations where the available data does not declare a Glide Ratio or Sink Rate at Vg value, and instead provides altitude loss vs. distance traveled data (as in the figures above) use the built-in “Glide Ratio Calculator” within the Glide Information section to generate an equivalent Glide Ratio value.

To use the calculator, touch the “Glide Ratio Calculator” key.

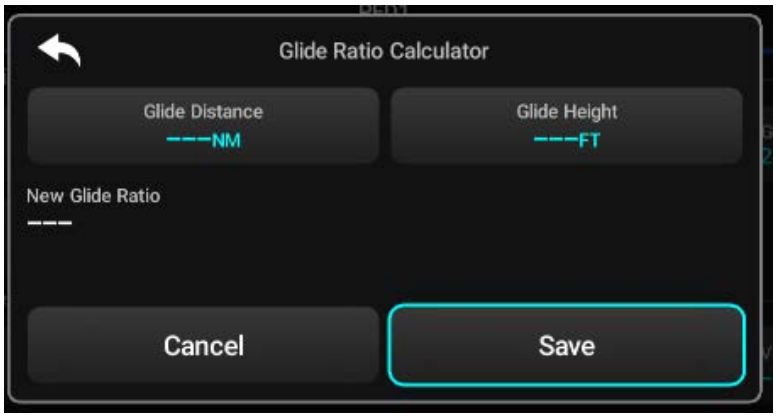

Figure 5-14 Glide Ratio Calculator

Next, enter the values provided by your AFM/POH. For the example in figure 5-13, enter 1.7NM into the “Glide Distance” field and 1000ft for the “Glide Height” field. Notice the calculator provides a New Glide Ratio of 10:1. Touch **Save** to close the calculator and load this new value into the “Glide Ratio” field.

NOTE

The Glide Ratio Calculator uses units that have been configured in the “Units of Measure” section from within the AXIS Configuration Mode. Refer to section 5.4.2.

If there is no published Best Glide Speed data for your aircraft, refer to section 5.4.4.7.

5.4.4.3 Vne (True)

For certain aircraft types, maximum airspeed is additionally limited by true airspeed (TAS). A secondary airspeed limit expressed as true airspeed may optionally be configured using the Vne (True) field. This airspeed is marked on the PFW airspeed tape with a second red color band which shows the equivalent indicated airspeed at which the aircraft’s true airspeed will exceed the configured true airspeed limit value. At low altitudes where true and indicated airspeed are similar, the PFW airspeed tape will show only the Vne (Indicated) limit. At higher altitudes, where true airspeed increases, a second red color band will begin to appear on the PFW airspeed tape to indicate the point where the aircraft will exceed the true airspeed limit at the current pressure altitude.

At high altitudes, the aircraft can reach the true airspeed limit even if its indicated airspeed is below the Vne (Indicated) “red line.” A second red band on the PFW airspeed tape alerts the pilot to this condition.

5.4.4.4 Other V-Speeds

Table 5-4 V-Speeds - Needs Work

Item	Description	Notes
V_{NE}	Never exceed speed (Indicated)	Red line on ASI.
	Never exceed speed (True)	Red color band on ASI.
V_{NO}	Normal operating speed	Top of green arc/bottom of yellow arc on ASI. If the aircraft has no yellow arc but has a green arc that extends to the red radial, set V_{NO} to the same value as V_{NE}.
V_{S0}	Stall speed in landing configuration	Bottom of white arc on ASI.
V_{S1}	Stall speed in a specific flight configuration	Bottom of green arc on ASI.
V_{FE}	Maximum flap extended speed	Top of white arc on ASI.
V_A	Maximum maneuvering speed	
V_X	Best angle of climb speed	Optional
V_Y	Best rate of climb speed	Optional
V_{YSE}	Single engine best rate of climb speed for a twin-engine aircraft	Blue radial on ASI of light twins.
V_R	Rotation speed	Optional. Typically set to rotation speed.
V_{MC}	Minimum controllable airspeed for twin-engine aircraft with only one engine operational	Lower red radial on ASI of light twins.
M_{MO}	Maximum Operating Mach Number	

5.4.4.5 M_{MO}

A third way to configure the aircraft's maximum airspeed limit is to enter a value for Maximum Operating Mach Number (M_{MO}). As with V_{NE} (True), the value for M_{MO} will be displayed on the PFW airspeed tape using a second red band that shows the equivalent indicated airspeed at which the aircraft's Mach number will exceed the configured maximum Mach number. At high altitudes, the aircraft can reach the maximum Mach limit even if its indicated airspeed is below the V_{NE} (Indicated) "red line." A second red band on the PFW airspeed tape alerts the pilot to this condition.

5.4.4.6 Custom Speed/Name

Enter a custom speed name and value to be displayed on the ASI. Up to four custom speeds can be entered. The entered label text will be displayed on the airspeed tape (in normal mode) at the entered speed. If no text is entered for the label, a small triangle will appear instead.

5.4.4.7 Gathering Aircraft Reference Speed and Performance Data

WARNING

If no reference speed and/or performance data is published for your aircraft, serious consideration should be given to using a qualified test-pilot to gather this critical information for you.

For aircraft that do not have published data (newly constructed aircraft, experimental aircraft, etc.), reference speed and other performance data may not be available.

In these cases, there are flight test procedures that can be performed to gather reference speed and performance data. For fixed-wing piston engine aircraft, Garmin recommends referencing the "EAA Flight Test Manual and Test Cards," available for purchase from the Experimental Aircraft Association, as well as FAA Advisory Circular AC 23-8C "Flight Test Guide For Certification of Part 23 Airplanes."

Both of these valuable resources can be used to safely gather data for your aircraft when no published data is given.

5.4.5 Navigation

Not all options are available on all systems, depending on equipage.

External Navigator 1/2 Selected Course

Determines whether the display(s) can control the selected course for an external navigator. Available selections are *Enable* or *Disabled*. When enabled, the AXIS flight display can set the selected course (using the G5/GDU). Set to Disabled only if the navigator is connected to an external mechanical CDI/HSI. Only available when an external GPS navigator is interfaced via RS-232.

RF Procedure Leg Support

Enables or disables Radius to Fix leg types on the AXIS flight display. With this setting enabled, the AXIS flight display will provide display and guidance for these leg types. RF legs of Required Navigation Performance 1.0 (RNP 1.0) or higher are supported. Only applies to COM or NAV/COM AXIS flight display units, or GTN Xi, GPS 175, GNC 355, or GNX 375.

Path-Based Fly-By Turn DTK

Enables the selected course to smoothly transition between straight legs while following a flyby turn. When enabled, the selected course (as displayed on the HSI) will smoothly transition between the inbound and outbound legs while following the course of a fly-by turn. When disabled, selected course will instantaneously change between from the inbound straight leg course to the outbound straight leg course at the start of the turn.

Supported Approach Types

User can select *All Approaches*, *Published Approaches* or *Only Visual Approaches*. All Approaches allows the pilot to select any published and visual approach. Published Approaches excludes visual approaches from being selected by the pilot. Only Visual Approaches is only available if no IFR Navigator exists in the system, and the pilot can only select visual approaches.

Max Visual Approach Angle

Enter the maximum allowed descent angle for the visual approaches. This limits the maximum descent angle a pilot can specify for a visual approach as well as the maximum descent angle the system will automatically adjust to in the event of a terrain conflict.

FPL Power Up Source

Only available when an external GPS navigator is interfaced via RS-232. This determines what flight plan source is selected on each system boot cycle. User can select *Retain Previous Source* or *Select External GPS*. If a GTN Xi, GPS 175, GNC 355, or GNX 375 also exists in the system, this setting is not available and the HSDB navigator is always selected.

Smart Glide

This setting is used to enable or disable Smart Glide in the system. Vg and Sink Rate at Vg must be configured in the Reference Speeds tab of the Settings application for this selection to be available. Not supported in rotorcraft installations.

VNAV VS Max Descent

Sets the maximum vertical speed descent. The default is -1500 fpm

VNAV Transition To Approach

When enabled, vertical navigation will automatically adjust the descent path to compensate for temperature changes and provide a continuous descent onto the approach. The Transition to Approach function requires a static air temperature input.

5.4.6 Terrain

Look Ahead Time

Determines the maximum time when an alert annunciation occurs. For example, if 60 seconds is selected, AXIS flight display provides an alert up to 60 seconds before you reach the terrain or obstacle. The installer can select 30s or 60s.

Look Ahead Pilot Selectable

This allows Look Ahead Time to be modified by the pilot in normal mode.

Terrain Alert Sensitivity

Alert Sensitivity determines what level of alerts are annunciated. AXIS flight display defaults to ‘High’ sensitivity, which annunciates all red and yellow alerts at the time set in Look Ahead Time. ‘Medium’ sensitivity annunciates all of the red and the highest priority of yellow alerts. ‘Low’ only annunciates red alerts. Select High, Medium or Low.

Terrain Sensitivity Pilot Selectable

This allows Terrain Alert Sensitivity to be modified by the pilot in normal mode.

Obstacle Alert Sensitivity

Obstacle Alert Sensitivity determines what level of alerts are annunciated. AXIS flight display defaults to *High* sensitivity, which annunciates all red and yellow alerts at the time set in Look Ahead Time. *Medium* sensitivity annunciates all of the red and the highest priority of yellow alerts. *Low* only annunciates red alerts. Select *High*, *Medium* or *Low*.

Obstacle Sensitivity Pilot Selectable

This allows Obstacle Alert Sensitivity to be modified by the pilot in normal mode.

Terrain Banding Height

The installer can select 1000 ft below, 750 ft below or 500 ft below.

Banding Pilot Selectable

This allows Terrain Banding Height to be modified by the pilot in normal mode.

5.4.7 Display

The settings on this page can be used to customize aspects of each individual AXIS display in the system. Select a display to configure using the control at the top of the page. A layout preview for the selected display is shown above. Not all options are available on all systems, depending on equipage.

Display Selection

Select the display to configure each setting. Select and configure settings for PFD1, and then change Display Selection and repeat to configure each display in the system.

5.4.7.1 Display Layout

Control Side Preference

Sets on which side the MFW will be displayed in Normal mode.

Default Layout

Sets whether the display will have a single PFW or split PFW/MFW when powered on in Normal mode.

Split Ratio

Sets the ratio between windows when the layout is set to Split in Normal mode. Options are *Small/Large*, *Large/Small*, and *50/50*.

EIS Position

Only available when at least one EIS gauge is configured per section 5.4.2. Sets which side of the screen the EIS strip is shown. Options are *Auto*, *Left*, or *Right*. When set to Auto, the EIS strip will default to the side with the PFW.

Pilot Selectable Default Layout

When enabled, the display layout defaults can be changed in Normal mode.

5.4.7.2 EIS

The following settings are only available if at least one EIS gauge is configured per section 5.5.2.

EIS Shown

When enabled, the selected display will show the EIS strip.

EIS Size

Sets the percentage of the screen that the EIS display takes. Options are *10%* or *15%*.

5.4.7.3 Data Bar

The data bar is shown at the top of the screen in Normal mode. The following settings enable or disable various functions of the data bar depending on the installation.

Pilot Selectable Data Bar

Enabling this allows the pilot to set what is displayed on the data bar in Normal mode.

Transponder Shown

When enabled, transponder controls will be shown on the data bar for the selected display.

COM1 Shown

When enabled, COM1 controls will be shown on the data bar for the selected display.

COM2 Shown

When enabled, COM2 controls will be shown on the data bar for the selected display.

NAV1 Shown

When enabled, NAV1 controls will be shown on the data bar for the selected display.

NAV2 Shown

When enabled, NAV2 controls will be shown on the data bar for the selected display.

Audio Panel Shown

When enabled, audio panel controls will be shown on the data bar for the selected display.

5.4.7.4 Apps Bar

Startup App Pilot Selectable (All Displays)

Enabling this allows the pilot to set what the default app is in normal mode.

Startup App

Set the MFW application to be selected at power up, for the display. This setting defaults to Map.

Traffic App

Enable this setting if traffic display is desired. If disabled, the traffic application will be removed from normal mode.

Weather App

Enable this setting if weather display is desired. If disabled, the weather application will be removed from normal mode.

5.4.8 System Sounds

5.4.8.1 Volumes

Primary Alert Volume

Sets the volume of primary alerts. Touch **Test Primary Alerts** to generate a test. Evaluate the alert for acceptable volume and intelligibility during both low and high cockpit noise levels. Adjust as necessary.

Audible Alerts Voice

Sets alerts voice type. Options are Male or Female.

5.4.8.2 Wired Audio Sources

Enable any AXIS Flight Display for which alert audio out is physically wired to the audio panel/intercom system. All configured displays in the system will appear as an option.

5.4.8.3 Engine and Airframe Alerting

Touch Test Engine/Airframe Audio to generate a test.

Engine/Airframe Alert Mode

Determines how engine and airframe audio alerts are presented. Options are *Tone* or *No Audio*.

5.4.8.4 AOA Alerting

AOA Alerting is only available when AOA is configured per section 5.3.1.3. Touch **Test AOA Audio** to generate a test. Evaluate the audio for acceptable volume and intelligibility during both low and high cockpit noise levels. Adjust the volume of AOA alerts as necessary, when not coupled to primary volume.

AOA Audio Mode

Stall Awareness or Approach + Stall Awareness. When set to Stall Awareness, the system will audibly alert the pilot when the AOA indicator enters the caution range and will beep progressively faster as AOA is increased towards a stall. A constant tone indicates a stall.

When set to Approach + Stall Awareness, the pilot is audibly alerted in the same manner, however the alerts begin when at or above the approach target calibration point and increase progressively faster until a constant tone is reached at the point of stall.

5.4.8.5 Altitude Alerting

Touch **Test Altitude Audio** to generate a test. Evaluate the audio for acceptable volume and intelligibility during both low and high cockpit noise levels. Adjust the volume of Altitude alerts as necessary, when not coupled to primary volume.

5.4.8.6 Minimums Alerting

Touch **Test Minimums Audio** to generate a test. Evaluate the audio for acceptable volume and intelligibility during both low and high cockpit noise levels. Adjust the volume of Minimums alerts as necessary, when not coupled to primary volume.

5.4.8.7 Takeoff Alerting

Touch **Test Takeoff Audio** to generate a test. Evaluate the audio for acceptable volume and intelligibility during both low and high cockpit noise levels. Adjust the volume of Takeoff alerts as necessary, when not coupled to primary volume.

Alert Altitude

Enter the altitude at which the Takeoff Alert is played. This can be used for any altitude alert desired for post-takeoff procedures.

5.4.8.8 VNAV Alerting

Touch **Test VNAV Audio** to generate a test. Evaluate the audio for acceptable volume and intelligibility during both low and high cockpit noise levels. Adjust the volume of VNAV alerts as necessary, when not coupled to primary volume.

5.4.8.9 Autopilot Alerting

Touch **Test AFCS Attention Audio** or **Test ESP Audio Alerts** to generate a test. Evaluate the audio for acceptable volume and intelligibility during both low and high cockpit noise levels.

5.4.8.10 Miscompare Alerting

Touch **Miscompare Audio**, to enable or disable miscompare audio alerts. If enabled, touch **Test Miscompare Audio** to generate a test.

5.4.8.11 Terrain Alerting

Touch **Test Terrain Audio** to generate a test. Evaluate the audio for acceptable volume and intelligibility during both low and high cockpit noise levels. Adjust the volume of Terrain alerts as necessary, when not coupled to primary volume.

NOTE

Terrain Alerting can not be disabled in systems with a TAWS-B enablement.

Touchdown Callouts

Enable **Touchdown Callouts** to receive a 500 foot aural annunciation when passing through 500 feet AGL. If a GHA 15 Radio AGL is installed in the aircraft, numerous additional options are populated that allow the user to enable or disable individual height callouts, from 500 feet, down to 1 foot.

5.4.8.12 Traffic Alerting

Touch **Test Traffic Audio** to generate a test. Evaluate the audio for acceptable volume and intelligibility during both low and high cockpit noise levels. Adjust the volume of traffic alerts as necessary, when not coupled to primary volume.

5.4.8.13 Vne Alerting

Touch **Test Vne Audio** to generate a test. Evaluate the audio for acceptable volume and intelligibility during both low and high cockpit noise levels. Adjust the volume of Vne alerts as necessary, when not coupled to primary volume.

5.4.9 PFD

Roll Display

The Roll Display should be configured to match the standby ADI. The attitude indicator on the PFD includes two pointers (on the Roll Display). When banking, one pointer indicates the aircraft bank angle and the other pointer remains stationary. The pointer that indicates bank angle can either point up (Sky Pointer) or down (Ground Pointer).

Slip/Skid Indicator

Bar or Ball. This setting selects the visual indication of the slip/skid indicator, utilizing a traditional ball, or an alternate trapezoidal representation. This setting is unavailable if a G5 or GI 275 exists in the system.

HSI Orientation

Allows setting the PFD HSI Orientation to either Heading or Track/Heading (default).

The Heading selection displays the HSI (on the PFD) in a heading-up orientation.

When Track/Heading is selected, the HSI will display ground track instead of magnetic heading when airborne and GPS data is available.

Trim/Flap Display

Allows installer to hide or show trim and flap indications on the PFD. If set to User Selected, the pilot can toggle these indications on and off in normal mode.

Trim/Flap Titles

If the preceding “Trim/Flap Display” configuration setting is enabled, this setting will hide or show trim and flap titles on the respective gauges. If set to User Selected, the pilot can toggle these indications on and off in normal mode.

Baro Setting Reminder

Provides CAS message when aircraft is determined to be on ground and baro altitude diverges from field elevation by more than 100 feet.

Auto Baro Transition

Automatic switching into or out of STD BARO as the aircraft is crossing a transition altitude or level, respectively. Automatic update of Transition Altitude/Level through referencing the flight plan.

Miscompare Monitor

Selecting ADAHRS + SFD will enable Miscompare (differences in heading, attitude, airspeed, etc.) Monitoring between an SFD (Standby Flight Display, consisting of one or more G5 units) and an ADAHRS LRU (GSU 25 or GSU 73).

In a system with a single ADAHRS LRU, selecting ADAHRS + SFD will enable the system to constantly perform Miscompare Monitoring between the standby flight display and the ADAHRS. In a system with multiple ADAHRS LRUs, selecting ADAHRS + SFD will enable the system to perform Miscompare Monitoring only if the system performance degrades to the equivalent of a single ADAHRS (due to the loss of all other ADAHRS LRUs).

When a miscompare condition between SFD and ADAHRS is detected, a CAS message will be displayed characterizing the miscompare condition. If an attitude miscompare is detected, ESP will be inhibited and the CAS message “ESP INHIBIT” will be displayed. The autopilot will remain usable during this condition.

Auto Declutter

When enabled, removes non-essential PFD elements when the aircraft is in extreme attitudes (+30°).

Primary Control Knob Behavior

Sets the function of the PFD-side control knob in Normal mode. Options are COM Volume, COM Tuning, Altitude/Heading, Course/Baro, and Pilot Selected.

Secondary Control Knob Behavior

Sets the function of the non-PFD-side control knob in Normal mode. Options are COM Volume, COM Tuning, Altitude/Heading, Course/Baro, and Pilot Selected.

AOA Transition Point

Determines the percentage of flap deployment at which the system will reference the appropriate flaps up/flaps down curve. If the installer prefers the system to reference the flaps down curve before flaps reach half way deployed, they would lower the flap position threshold from the default 50% value.

AOA Enable Above

Airspeed above which AOA information will appear to the pilot.

AOA Disable Below

Airspeed below which AOA information will be removed from display to the pilot.

Vertical Speed Indicator Range

Allows the range of the vertical speed tape to set to +/- 2,000 fpm, +/- 3,000 fpm, or +/- 4,000 fpm.

En route/Terminal VDI Scale

+/- 1000 ft or +/- 500 ft. This setting dictates the En route/Terminal VNAV vertical deviation indicator scale. The specified value represents two dots on the PFD VDI.

VNAV Gating

Altitude Selector or Descend Always. If set to Altitude Selector, the Selected Altitude bug must be below the aircraft's current altitude, for a VNAV descent to capture.

If set to Descend Always, the system will capture the VNAV descent profile, regardless of the value of the selected altitude bug.

Show Mach

When enabled, will display Mach Number when the configured Mach On speed is reached and will revert to the configured speed when the configured Mach Off speed is reached.

5.4.10 Audio Panel/Intercom

The Audio Panel/Intercom tab includes the configuration settings for the system's audio panel or dedicated ICS (intercom) in the system. To enable the audio panel function on an AXIS flight display, use the Modify page for that display in the Devices application. Refer to section 5.3.1 for more information.

NOTE

This tab is titled Audio Panel or Intercom, based on the LRU being used as the audio device in the system.

NOTE

Only 1 audio panel or ICS device can be assigned to the system. If an audio panel internal to an AXIS flight display is enabled, or an external GMA audio panel is in use, ICS must be disabled on any GTR radio present in the system (section 5.3.1).

Configurable items for the supported Audio Panel or Intercom (ICS) models are in the following sections.

5.4.10.1 AXIS Internal Audio Panel

Test Audio Controls

Allows user to toggle configured audio channels on and off, similar to the pilot controls. This assists with testing while in configuration mode.

Internal COM Indicator Type

Arrow or Square. This setting dictates the form of the MIC and COM indicators of the audio panel controls on the GDU data bar. When set to Arrow, the indicators appear as triangles to point to the selected radio on the data bar. When set to square, the icon indicates the selected COM radio, without implying the radio's location on the data bar.

External COM Enable State

Used to enable (show) or disable (hide) the audio panel page's external COM radio controls. Set to Disable if an external COM does not exist in the system. This setting does not appear if the system is configured for an external COM Radio (e.g., GTN 650, GTR20).

External COM Indicator Type

Arrow or Square. This setting dictates the form of the MIC and COM indicators of the audio panel controls on the GDU data bar. When set to Arrow, the indicators appear as triangles to point to the selected radio on the data bar. When set to square, the icon indicates the selected COM radio, without implying the radio's location on the data bar.

External NAV Enable State

Used to enable (show) or disable (hide) the audio panel page's external NAV radio controls. Set to Disabled if an external NAV radio does not exist in the system. This setting does not appear if the system is configured for an external NAV Radio (e.g., GTN 650, GNC 255).

External Alert Volume

Used to specify the input volume of the external alert input of the AXIS display unit designated as the audio panel.

External Radio and Alert Squelch

Dictates the squelch level for the audio received on the External COM input, External NAV Input and Alert input. If squelch is set too high, audio from external sources may not be heard, when set to a normal volume level. If too low, various "mutes" (e.g., Radio Mutes Music) in the system may generate nuisance mute activations.

Passengers Intercom Enable State

Used to enable (show) or disable (hide) the audio panel page's passenger intercom controls. Set to disabled when a passenger headset is not wired in the system.

Pilot Position

Select Left or Right to select pilot position. When Right is selected, the copilot is positioned to the left of the pilot for 3D audio processing.

Music Enable State

Used to show or hide the Music selection on the normal mode ICS page. Set to disabled if a music source is not wired to the Music 1 input of the AXIS flight display.

Music Title

Set the title of the music source selection on the audio panel page when the music source is enabled.

Speaker Enable State

Used to show or hide the speaker selection on the normal mode audio panel page. Set to disabled if a speaker device is not wired to the speaker output of the AXIS flight display.

Speaker Volume

Sets the volume for the speaker output when the speaker is enabled.

External COM Sidetone Source

External or Internal. This setting only impacts transmissions through the external COM radio. This dictates whether the user hears the sidetone returned from the external radio or if the AXIS flight display generates the sidetone the same way it does for transmissions through its internal radio.

When *External* is selected, the COM sidetone audio the user hears is the audio signal returned from the external radio. This option can be advantageous to help confirm the radio you are transmitting on is successfully transmitting.

When *Internal* is selected, the COM sidetone audio the user hears is the audio signal generated by the AXIS flight display, and sidetone will sound the same when transmitting through either radio.

5.4.10.2 GMA 245R(M) Remote Audio Panel

Test Audio Controls

Allows user to toggle configured audio channels on and off, similar to the pilot controls. This assists with testing while in configuration mode.

COM1 Indicator Type

Arrow or Square. This setting dictates the form of the MIC and COM indicators of the audio panel controls on the GDU data bar. When set to Arrow, the indicators appear as triangles to point to the selected radio on the data bar. When set to square, the icon indicates the selected COM radio, without implying the radio's location on the data bar.

COM 2 Enabled

Used to enable (show) or disable (hide) the audio panel page's COM 2 radio controls. Set to Disable if a second COM does not exist in the system. This setting does not appear if the system is configured for remote control of a second COM Radio.

COM2 Indicator Type

Arrow or Square. This setting dictates the form of the MIC and COM indicators of the audio panel controls on the GDU data bar. When set to Arrow, the indicators appear as triangles to point to the selected radio on the data bar. When set to square, the icon indicates the selected COM radio, without implying the radio's location on the data bar.

NAV 1 Enable State

Used to enable (show) or disable (hide) the audio panel page's NAV 1 radio controls. Set to Disable if an NAV 1 does not exist in the system. Note that this is not an option with the panel mount audio panels.

NAV 1 Title

Set the titles of the NAV 1 radio on the audio panel page when the NAV 1 radio is enabled.

NAV 2 Enable State

Used to enable (show) or disable (hide) the audio panel page's NAV 2 radio controls. Set to Disable if an NAV 2 does not exist in the system. Note that this is not an option with the panel mount audio panels.

NAV 2 Title

Set the titles of the NAV 2 radio on the audio panel page when the NAV 2 radio is enabled.

AUX 1 Enable State

Allows the selection of monitoring auxiliary radio channel 1, when enabled. Set to Disabled if an audio connection is not made to the AUX 1 input.

AUX 1 Title

Set the title of the AUX 1 radio control on the audio panel page when the AUX 1 radio is enabled.

AUX 1 Volume

Set the volume for the AUX 1 radio when AUX 1 radio is enabled.

AUX 2 Enable State

Allows the selection of monitoring auxiliary radio channel 2, when enabled. Set to Disabled if an audio connection is not made to the AUX 2 input.

AUX 2 Title

Set the title of the AUX 2 radio control on the audio panel page when the AUX 2 radio is enabled.

AUX 2 Volume

Set the volume for the AUX 2 radio when AUX 2 radio is enabled.

AUX 3 Enable State

Allows the selection of monitoring auxiliary radio channel 3, when enabled. Set to Disabled if an audio connection is not made to the AUX 3 input.

AUX 3 Title

Set the title of the AUX 3 radio control on the audio panel page when the AUX 3 radio is enabled.

AUX 3 Volume

Set the volume for the AUX 3 radio when AUX 3 radio is enabled.

Master Squelch

Set the audio panel master squelch level from 0% (open, audio is always heard) to 100% (squelched, no audio).

Master squelch functions to prevent low level noise from being passed to the headset ear speakers, this is known as “squelching” or muting the audio. To “break” or “open” squelch means that enough audio signal is present the signal is passed through and can be heard. Increasing this setting increases the signal level required to break/open squelch. If needed, adjust the master squelch level so the audio background noise is muted.

This setting only applies to radio audio inputs (i.e. COMs, NAVs, and AUXs) and alert inputs. This setting does not affect intercom.

Alert 1/2/3/4 Volume

Sets the volume for the specified Alert input.

Passenger Intercom Enable State

Used to enable (show) or disable (hide) the audio panel page’s passenger intercom controls. Set to disabled when a passenger headset is not wired in the system.

Music 1 Enable State

Show or hide the Music 1 selection on the audio panel page. Set to disabled if a music source is not wired to the specified Music input of the GMA 245R Audio panel.

Music 1 Title

Set the title of the music 1 source selection on the audio panel page when music source 1 is enabled.

Music 2 Enable State

Show or hide the Music 2 selection on the audio panel page. Set to disabled if a music source is not wired to the specified Music input of the GMA 245R Audio panel.

Music 2 Title

Set the title of the music 2 source selection on the audio panel page when music source 2 is enabled.

Speaker Enable State

Enable (show) or disable (hide) the audio panel page speaker control. Set to disabled if a speaker device is not connected to the speaker output of the GMA 245R Audio panel.

Speaker Volume

Sets the volume for the speaker when the speaker is enabled.

Marker Beacon Enable State

Enable (show) or disable (hide) the audio panel page marker beacon control. Set to disabled if a marker beacon is not in use.

Marker Beacon Volume

Set the volume for the marker beacon tone.

Marker Sensitivity

Selecting Low configures the marker beacon signal strength to detect/pick-up marker beacon signal later (closer to signal) and display the indication for a shorter period. Selecting High configures the marker beacon signal strength to detect/pick-up marker beacon signal earlier (farther away) and display the indication for a longer period.

Marker Low

This sensitivity threshold value represents the signal strength sensitivity offset and is adjustable from -16 to +16. The default is “0”.

Marker High

This sensitivity threshold value represents the signal strength sensitivity offset and is adjustable from -24 to +8. The default is “0”.

NOTE

Adjusting for positive maker beacon threshold values increases sensitivity resulting in activation at a higher signal strength and consequently, signal will remain active for a shorter period while flying over the marker beacon. Adjusting for negative threshold values decreases the sensitivity resulting in activation at a lower signal strength and consequently, signal will remain active for a longer period while flying over the marker beacon.

5.4.10.3 GMA 245 (Panel Mount)

Test Audio Controls

Allows user to toggle configured audio channels on and off, similar to the pilot controls. This assists with testing while in configuration mode.

COM1 Indicator Type

Arrow or Square. This setting dictates the form of the MIC and COM indicators of the audio panel controls on the GDU data bar. When set to Arrow, the indicators appear as triangles to point to the selected radio on the data bar. When set to square, the icon indicates the selected COM radio, without implying the radio's location on the data bar.

COM2 Indicator Type

Arrow or Square. This setting dictates the form of the MIC and COM indicators of the audio panel controls on the GDU data bar. When set to Arrow, the indicators appear as triangles to point to the selected radio on the data bar. When set to square, the icon indicates the selected COM radio, without implying the radio's location on the data bar.

AUX 1 Title

Set the title of the AUX 1 radio control on the audio panel page.

AUX 1 Volume

Set the volume for the AUX 1 radio input.

AUX 2 Title

Set the title of the AUX 2 radio control on the audio panel page.

AUX 2 Volume

Set the volume for the AUX 2 radio input.

AUX 3 Title

Set the title of the AUX 3 radio control on the audio panel page.

AUX 3 Volume

Set the volume for the AUX 3 radio input.

Master Squelch

Set the audio panel master squelch level from 0% (open, audio is always heard) to 100% (squelched, no audio).

Master squelch functions to prevent low level noise from being passed to the headset ear speakers, this is known as “squelching” or muting the audio. To “break” or “open” squelch means that enough audio signal is present the signal is passed through and can be heard. Increasing this setting increases the signal level required to break/ open squelch. If needed, adjust the master squelch level so the audio background noise is muted.

This setting only applies to radio audio inputs (i.e. COMs, NAVs, and AUXs) and alert inputs. This setting does not affect intercom.

Alert 1/2/3/4 Volume

Sets the volume for the specified Alert input.

Music 1 Title

Set the title of the music 1 source selection on the audio panel page.

Music 2 Title

Set the title of the music 2 source selection on the audio panel page.

Speaker Volume

Sets the volume for the speaker output of the GMA 245 audio panel.

5.4.10.4 GTR 20 ICS

Test Audio Controls

Allows user to toggle configured audio channels on and off, similar to the pilot controls. This assists with testing while in configuration mode.

AUX 1 Enable State

Allows the selection of monitoring the auxiliary radio 1 channel.

AUX 1 Volume

Set the volume for the AUX 1 audio input channel when the audio channel is enabled.

AUX 1 Squelch

AUX 1 squelch prevents low level noise from being passed to the headset ear speakers. Adjust the AUX SQ level so the audio background noise is muted. Note that adjusting the AUX SQ to a high level may squelch the desired audio.

AUX 1 Mutes Music

This setting will mute the music input if AUX1 input level is sufficient to break aux squelch.

AUX 2 Enable State

Allows the selection of monitoring the auxiliary radio 2 channel.

AUX 2 Volume

Set the volume for the AUX 2 audio input channel when the audio channel is enabled.

AUX 2 Squelch

AUX 2 squelch prevents low level noise from being passed to the headset ear speakers. Adjust the AUX SQ level so the audio background noise is muted. Note that adjusting the AUX SQ to a high level may squelch the desired audio.

AUX 2 Mutes Music

This setting will mute the music input if AUX2 input level is sufficient to break aux squelch.

Music Enable State

Used to show or hide the Music selection on the normal mode ICS page. Set to disabled if a music source is not wired to the Music 1 input of the GTR 20.

Music Title

Set the title of the music source selection on the audio panel page when the music source is enabled.

Pilot Position

Select Left or Right to select pilot position. When Right is selected, the copilot is positioned to the left of the pilot for 3D audio processing.

Audio Out Gain

When the intercom is enabled, RECEIVER AUDIO OUT will output everything the pilot hears in the headset ear speakers with the exception of music audio. If RECEIVER AUDIO OUT is used as the source of audio to a recording device then adjust the AUDIO OUT GAIN setting for desired audio level at the recording device.

5.4.10.5 GTR 205R(X) ICS

Test Audio Controls

Allows user to toggle configured audio channels on and off, similar to the pilot controls. This assists with testing while in configuration mode.

AUX 1 Function

Disable, Pilot Control or Unswitched. Pilot Control provides a user toggle for the audio channel on the audio panel control page. Unswitched does not provide a pilot control for the audio channel, it is always open with no ability for the pilot to turn the audio channel off. Use this setting if the device connected to the AUX 1 input is an alerting device.

AUX 1 Volume

Set the volume for the AUX 1 audio input channel when the audio channel is enabled.

AUX 1 Title

When Pilot Control is selected for AUX 1, this field allows the installer to set the text label that appears on the audio panel controls page for the AUX 1 input.

AUX 2 Function

Disable, Pilot Control or Unswitched. Pilot Control provides a user toggle for the audio channel on the audio panel control page. Unswitched does not provide a pilot control for the audio channel, it is always open with no ability for the pilot to turn the audio channel off. Use this setting if the device connected to the AUX 2 input is an alerting device.

AUX 2 Volume

Set the volume for the AUX 2 audio input channel when the audio channel is enabled.

AUX 2 Title

When Pilot Control is selected for AUX 2, this field allows the installer to set the text label that appears on the audio panel controls page for the AUX 2 input.

AUX 3 Function

Disable, Pilot Control, Stereo Right or Unswitched. Pilot Control provides a user toggle for the audio channel on the audio panel control page. Unswitched does not provide a pilot control for the audio channel, it is always open with no ability for the pilot to turn the audio channel off. Use this setting if the device connected to the AUX 3 input is an alerting device.

NOTE

If "Stereo Right" is selected, the AUX 4 input will be forced to Stereo Left. This facilitates a stereo audio input. The label for this music source can be set in the Music section of this page.

AUX 3 Volume

Set the volume for the AUX 3 audio input channel when the audio channel is enabled. If Stereo Right is selected, a volume slider is not provided for this specific input.

AUX 3 Title

When Pilot Control is selected for AUX 3, this field allows the installer to set the text label that appears on the audio panel controls page for the AUX 3 input.

AUX 4 Function

Disable, Pilot Control, Stereo Left or Unswitched. Pilot Control provides a user toggle for the audio channel on the audio panel control page. Unswitched does not provide a pilot control for the audio channel, it is always open with no ability for the pilot to turn the audio channel off. Use this setting if the device connected to the AUX 4 input is an alerting device.

NOTE

If Stereo Left is selected, the AUX 3 input will be forced to Stereo Right. This facilitates a stereo audio input. The label for this music source can be set in the Music section of this page.

AUX 4 Volume

Set the volume for the AUX 4 audio input channel when the audio channel is enabled. If Stereo Left is selected, a volume slider is not provided for this specific input.

AUX 4 Title

When Pilot Control is selected for AUX 4, this field allows the installer to set the text label that appears on the audio panel controls page for the AUX 4 input.

AUX Input Squelch

Set the squelch level for all of the four AUX inputs that are configured for Pilot Control or Unswitched."

Music Title

Set the title of the music source input, that is displayed on the audio panel page when the music source is enabled (AUX3 and AUX4 set to Stereo L/R).

Speaker Enable State

Enable (show) or disable (hide) the audio panel page speaker control. Set to disabled if a speaker device is not connected to the speaker output of the GTR 205(x)R.

Speaker Volume

Sets the volume for the speaker output of the GTR 205(x)R, when the speaker is enabled.

Pilot Position

Select Left or Right to select pilot position. When Right is selected, the copilot is positioned to the left of the pilot for 3D audio processing.

5.4.11 COM Radio

AXIS flight display supports on-screen control of up to two VHF communication radios (COM1 and COM2). The specific radio functionality depends on the features supported by the software version used by the COM radio (table 5-5). All supported radios are able to be shown on the CNI bar at the top of a display. Whether a radio is displayed on the CNI bar depends on the show user controls setting, as described in section 5.4.7.

NOTE

If radio controls are not shown on the CNI bar, they are still available in the main menu.

Table 5-5 COM Radio Supported Functions

COM Radio	Connection to AXIS Flight Display	S/W Version	AXIS Flight Displays Interface Functions Supported					
			Display Active & Standby COM Freq.	Tune Standby COM Freq.	Swap COM Freq.	Change COM Volume	Toggle COM Squelch	Toggle MON Mode
GDU 116C	Internal	All	✓	✓	✓	✓	✓	✓
GDU 116NC	Internal	All	✓	✓	✓	✓	✓	✓
SL30/SL40	RS-232	All	✓	✓				
GTR 20	CAN Bus	All	✓	✓	✓	✓	✓	✓
GTR 200B	CAN Bus	All	✓	✓	✓	✓	✓	✓
GNC 355	HSDB	All	✓	✓	✓	✓	✓	✓
GTR 205x	HSDB, CAN Bus, or RS-232	All	✓	✓	✓	✓	✓	✓
GTR 205R(x)	CAN Bus or HSDB	All except v2.2x	✓	✓	✓	✓	✓	✓
GNC 215	RS-232	All	✓	✓	✓	✓	✓	✓
	HSDB	All	✓	✓	✓	✓	✓	✓
GTR 225/ GNC 255	RS-232	v2.10 or later	✓	✓	✓	✓	✓	✓
		Other versions		✓				
GTN 635/ GTN 650/ GTN 750	RS-232	v6.11 or later	✓	✓	✓	✓	✓	✓
		Other versions						
GTN 635 Xi/ GTN 650 Xi/ GTN 750 Xi	HSDB	All	✓	✓	✓	✓	✓	✓

COM Radio	Connection to AXIS Flight Display	S/W Version	AXIS Flight Displays Interface Functions Supported					
			Display Active & Standby COM Freq.	Tune Standby COM Freq.	Swap COM Freq.	Change COM Volume	Toggle COM Squelch	Toggle MON Mode
GNS 4XXW/ GNS 5XXW	N/A	N/A						

For installations using the AXIS Internal COM Radio, GTR 20, GTR 205R, or GTR 205R(x) COM radio, the available options are described in the following text.

5.4.11.1 AXIS Flight Display Internal COM Radio Configuration

Frequency Tuning

Allows user to change the active frequency of the internal COM radio, from configuration mode, for testing purposes.

COM Volume

Set the received audio volume.

COM Sidetone Volume

Adjusts pilot/copilot microphone volume sent to headset (sidetone) during COM transmit.

Sidetone Mode External

Enable or *Disable*. When set to *Disabled*, sidetone audio quality is high-fidelity, similar to intercom audio.

When set to Enabled, sidetone audio quality reflects additional filtering applied to transmit audio. One advantage is transmitted audio sounds “different” than intercom audio, so it is obvious when potentially inadvertently transmitting.

This setting always affects transmit sidetone through the AXIS internal COM radio. This setting can also affect transmit sidetone through a connected external COM radio if COM Sidetone Source is set to Internal in the Audio Panel settings menu.

COM RX Squelch

NOTE

The COM RX Squelch settings allows adjustment of the noise signal strength required to break squelch for the COM receiver.

The COM RX Squelch setting configures the RX squelch for all frequencies. The default setting is 50%. 0% is the most sensitive (i.e., the weakest signal level necessary to break squelch). Decreasing the value will allow the squelch to be broken with low signal levels. Increasing the value will require higher signal levels to break squelch.

Table 5-6 contains the approximate levels when the auto squelch opens for various COM RX squelch settings. Installations of AXIS Internal COMs generally uses a COM RX squelch setting of 50 or higher.

Table 5-6 COM RX Auto Squelch Settings

COM RX Squelch Setting (%) [1]	RX Squelch Open Approximation (dBm)
0	-107
25	-103.5
50 (Default)	-100
75	-96.5
100	-93

[1] The COM RX squelch range (0-100) is a linear response.

COM Carrier Squelch

NOTE

COM carrier squelch settings allow adjustment of the carrier signal strength required to break squelch for the COM receiver.

The COM carrier squelch level adjustment reduces the sensitivity of the COM receiver. Elevated, ambient RF interference levels in certain flight environments, such as low-flying rotorcraft operating over metropolitan areas or aircraft with equipment installed that interferes with the COM radio, may require adjustment of the COM carrier squelch to reduce undesired squelch breaks.

Table 5-7 COM Carrier Squelch Settings

COM Carrier Squelch Setting (%) [1]	Carrier Squelch Open Approximation (dBm)
0	-93
25	-89.5
43 (Default)	-87
50	-86
75	-82.5
100	-79

[1] The COM Carrier range (0-100) is a linear response.

Emergency Volume

Set the COM radio volume that will be used if internal COM radio fail safe mode is active.

TX MIC 1/2 Gain

Increases or decreases the percent of transmitted modulation which affects the volume of the received signal, also affects own transmit sidetone.

MON Mode On Swap

Setting to Preserve MON will keep the Monitor feature ON when pressing the Frequency Transfer Key. Setting to Disable MON will turn off the Monitor feature when the Frequency Transfer Key is pressed.

Discrete Input 1-6

Refer to section 5.5.3 for more information on configuring discrete inputs for this unit. The Internal COM Radio discrete inputs support the following presets:

- None - No discrete selected
- COM Frequency Swap - Swap the active and standby COM frequency.
- COM Playback - Plays the most recent COM recording from the AXIS GDU COM radio.
- Copilot Intercom Key - Activates the copilot's microphone for ICS, when keyed ICS is enabled.
- NAV Frequency Swap - Swap the active and standby NAV frequency.
- Passenger Intercom Key - Activates the passenger's microphone for ICS, when keyed ICS is enabled.
- Pilot Intercom Key - Activates the pilot's microphone for ICS, when keyed ICS is enabled.
- Toggle MON Mode - Enable/Disable monitor function.
- Transmit Interlock - Desensitizes the receiver of the COM radio, in response to a transmission by a cross-side radio.
- Hold For Lockout - Activates COM radio lockout mode when held Low for 2 seconds (tunes 121.5 and selects Mic audio to the internal COM).
- COM Freq Swap & Hold For Lockout - Momentary activation swaps active and standby COM frequency; holding Low for more than 2 seconds tunes the emergency frequency.

5.4.11.2 GTR 205R/205R(x) COM Radio Configuration

Frequency Tuning

Allows user to change the active frequency of the COM radio, from configuration mode, for testing purposes.

COM Volume

Set the received audio volume.

COM Sidetone Volume

Adjusts pilot/copilot microphone volume sent to headset (sidetone) during COM transmit.

Sidetone Mode External

Enable or *Disable*. When set to *Disabled*, sidetone audio quality is high-fidelity, similar to intercom audio.

When set to *Enabled*, sidetone audio quality reflects additional filtering applied to transmit audio. One advantage to this, is transmitted audio sounds “different” than intercom audio, so it is obvious when potentially inadvertently transmitting.

COM RX Squelch

NOTE

The COM RX Squelch settings allows adjustment of the noise signal strength required to break squelch for the COM receiver.

The COM RX Squelch setting configures the RX squelch for all frequencies. The default setting is 50%. 0% is the most sensitive (i.e., the weakest signal level necessary to break squelch). Decreasing the value will allow the squelch to be broken with low signal levels. Increasing the value will require higher signal levels to break squelch.

Table 5-8 contains the approximate levels when the auto squelch opens for various COM RX squelch settings. Installations of GTR 205R(x) will generally use a COM RX squelch setting of 50 or higher.

Table 5-8 COM RX Auto Squelch Settings

COM RX Squelch Setting (%) [1]	RX Squelch Open Approximation (dBm)
0	-107
25	-103.5
50 (Default)	-100
75	-96.5
100	-93

[1] The COM RX squelch range (0-100) is a linear response.

COM Carrier Squelch

NOTE

COM carrier squelch settings allow adjustment of the carrier signal strength required to break squelch for the COM receiver.

The COM carrier squelch level adjustment reduces the sensitivity of the COM receiver. Elevated, ambient RF interference levels in certain flight environments, such as low-flying rotorcraft operating over metropolitan areas or aircraft with equipment installed that interferes with the COM radio, may require adjustment of the COM carrier squelch to reduce undesired squelch breaks.

Table 5-9 COM Carrier Squelch Settings

COM Carrier Squelch Setting (%) [1]	Carrier Squelch Open Approximation (dBm)
0	-93
25	-89.5
43 (Default)	-87
50	-86
75	-82.5
100	-79

[1] The COM Carrier range (0-100) is a linear response.

Emergency Volume

Set the COM radio volume that will be used if the GTR 205R(x) has automatically tuned the emergency frequency as a result of losing communication with the AXIS flight display system.

TX MIC 1/2 Gain

Increases or decreases the percent of transmitted modulation which affects the volume of the received signal, also affects own transmit sidetone.

MON Mode On Swap

Setting to Preserve MON will keep the Monitor feature ON when pressing the Frequency Transfer Key. Setting to Disable MON will turn off the Monitor feature when the Frequency Transfer Key is pressed.

Discrete Input 1-4

The GTR 205R(x) discrete inputs support the following presets:

- None (no discrete selected)
- COM Frequency Swap
- Copilot Intercom Key
- Pilot Intercom Key
- Toggle MON Mode
- Transmit Interlock
- Hold For Lockout
- COM Freq Swap & Hold For Lockout

NOTE

Refer to section 5.5.3 for more information on configuring discrete inputs for this unit.

5.4.11.3 GTR 20 COM Radio Configuration

Frequency Tuning

Allows user to change the active frequency of the COM radio, from configuration mode, for testing purposes.

COM Volume

Used to set the received audio volume.

Emergency Volume

Used to set the COM radio volume that will be used if the GTR 20 has automatically tuned the emergency frequency as a result of losing communication with the AXIS flight display system.

Transmit Sidetone

Adjusts pilot/copilot microphone volume sent to headset (sidetone) during COM transmit.

RF Squelch

Used to set the received signal level required to break squelch. Increasing this setting increases the signal level required to break squelch. Receiver squelch can be set from 0-10, a setting of 0 (default) represents the factory calibration.

Microphone Gain

Increases or decreases the percent of transmitted modulation which affects the volume of the received signal, also affects own transmit sidetone.

MON Mode ON Swap

Setting to Preserve MON will keep the Monitor feature ON when pressing the Frequency Transfer Key. Setting to Disable MON will turn off the Monitor feature when the Frequency Transfer Key is pressed.

Discrete Input 1-2

The GTR 20 discrete inputs support the following presets:

- None (no discrete selected)
- COM Frequency Swap
- Copilot Intercom Key
- Pilot Intercom Key
- Toggle MON Mode

NOTE

Reference section 5.5.3 for more information on configuring discrete inputs for this unit.

5.4.12 NAV Radio

NAV 1/2 Filtered LOC/GS

Use the Filtered LOC/GS output when interference, such as rotor modulation, causes the LOC/GS deviation to undesirably oscillate. The filtering should smooth oscillations caused by interference. If the Filtered LOC/GS output is used, the GNC does not meet the course deviation current response requirements of TSO-C34e, TSO-C36e, ETSO-2C34f, and ETSO-2C36f.

5.4.13 Transponder

AXIS Flight Displays provide a configuration interface for remote transponders. For integrated remote transponders, it is important to use the AXIS Flight Display interface to configure the transponder, rather than the GTX PC Tool.

Configure the interfaced transponder as follows. Refer to the applicable transponder installation manual. Not all settings listed are applicable to all installations.

Aircraft Registration

Enter the aircraft tail number.

Aircraft Type

Can be set to Unknown, Fixed Wing, or Rotorcraft, as applicable. If Fixed Wing is selected, a field to enter the aircraft's approximate maximum weight is displayed.

Mode S Address Type

Sets the Mode S Address Type. Options are Octal, Hex, or US Tail #. The Mode S Address Type will be configured if already configured on the Datalink tab.

Mode S Address

Sets the Mode S Address. The Mode S Address will be configured if already configured on the Datalink tab. If the address type set to US Tail #, the address will automatically be set as the configured aircraft tail number that was entered on the Airframe tab.

Flight ID Mode

Can be set to Set By Pilot or Other, as applicable. If Set By Pilot is selected, the flight ID can be entered in normal mode. Use Aircraft Registration if US Tail # was selected as the Mode S Address Type.

Flight ID

This field displays when the Flight ID Mode is set to Other. Enter the appropriate Flight ID.

VFR Code

Sets the code that is selected when VFR is selected. The VFR code for any altitude in the United States is 1200. The default is 1200.

Default to VFR Code on Power Up

Enable to revert the transponder code to the configured VFR code on each power cycle. Set to Disable to retain the previous code on each power cycle.

GPS Antenna Offset from Nose

Enter the GPS antenna offset from the nose of the aircraft.

Aircraft Length

Enter the aircraft length.

Aircraft Width

Enter the aircraft width.

Aircraft Weight

Enter the aircraft's maximum takeoff weight (MTOW).

Aircraft Max Speed

Enter the aircraft maximum speed.

Antenna Diversity

Set to enabled for diversity transponders with a second antenna mounted to the aircraft.

Top/Bottom Antenna Cable Loss

For diversity units, enter the top antenna and bottom antenna cable loss.

Position Integrity

Refers to the integrity level of the separate TSO WAAS GPS input that can be connected to the transponder. Set to 1E-7 when a certified GNS/GTN/GPS unit, GPS 175, GNC 355, GNX 375, GDU 116C or NC, or GPS 20A is providing ADS-B Out+ to the transponder, or if the transponder has a built in GPS receiver. Set to "VFR GPS" if none of these devices (certified GNS/GTN/GPS unit, GDU116C or NC, or GPS 20A) are connected to the transponder.

ADS-B Transmit Pilot Selectable

If enabled, ADS-B Transmit can be turned on or off in normal mode, by the pilot. If disabled, ADS-B Transmit can only be turned on or off using the ADS-B Transmit configuration setting.

ADS-B Transmit

Enables or disables Automatic Dependent Surveillance-Broadcast (ADS-B). Enabled is the default. When ADS-B Transmit is disabled, the BDS items that are marked "ES Enabled Units Only" are not active (no extended squitter). Refer to the applicable transponder installation manual for BDS information.

Enhanced Surveillance

GTX 23/23ES/33/33ES only. Sets Enhanced Surveillance (EHS) to Disable or Enable. Enable is the default. When EHS is set to Disable the BDS (refer to the applicable transponder installation manual for BDS information) items that are marked “EHS Only” are not active (no enhanced surveillance).

HSDB GTS Present

Set to enabled if a GTS 8XX is interfaced directly to the transponder via HSDB (an HSDB connection is made directly between the transponder and the GTS 8XX).

HSDB GTN Present

Set to enabled if a GTN Xi is interfaced directly to the transponder via HSDB (an HSDB connection is made directly between the transponder and the GTN Xi).

Transponder RS-232 Ports 2/3/4

Configure the transponder RS-232 ports per table 5-10.

Table 5-10 GTX RS-232 Port Configuration

Selection	Description
None	GTX RS-232 port not used.
Transponder Data	Program the GTX RS-232 port to this setting, if the port is connected to a #2 AHRS in the AXIS system, as a backup path.
ADS-B+ GPS Format 1	GPS position input from a TSO GPS source (9600 baud).
Connext Format 1 (GTX x45 only)	Connext weather and traffic data for a AXIS flight display system.
Connext Format 3 (GTX x45 only)	Connext weather and traffic data for a Flight Stream 110/210
GNS (GTX x45 only)	Weather data/GPS position input from a GNS navigator.
ADS-B+ GPS Format 2	GPS position input from a TSO GPS source (38400 baud)
Connext Format 4 (GTX x45 only)	Connext weather and traffic data. Connext Format 4 is a higher baud rate version of Connext Format 1. Must use AXIS serial setting of Connext 115200 for compatibility.

5.4.14 GPS

For each AXIS flight display internal IFR GPS and external IFR GPS source interfaced via HSDB, configure the height of the GPS antenna above ground level while the aircraft is sitting on the ground. Before proceeding, measure the GPS antenna vertical offset (to the nearest tenth of a foot).

5.4.14.1 Show Sensor Toggle Keys

Toggles ability to enable/disable GPS sources in normal mode.

5.4.15 Radio AGL

Configurable items are as follows:

Antenna Height and Units

Measure the physical distance between the GHA 15 and ground. Select the appropriate measurement units and input this value into the Antenna Height input box. The measured distance for antenna height can be offset if the zero foot point is desired to be at a different height than mounted unit height on ground (for example, while flaring). Unit may show negative height while on ground if measured unit distance is offset.

Maximum Displayed Height

Sets the maximum radio AGL value for which a data field will be displayed on the PFD. When above this value, the PFD data field will be removed from the display.

Beam Width Sensitivity

NOTE

Using the reduced sensitivity setting may filter out low reflectivity terrain (e.g., tall grass, canopy of trees) within 25 feet of the aircraft, resulting in a loss of height data.

Set to *Normal* for most installations. Select *Reduced Sensitivity* if obstructions or materials exist within the field of view of the GHA antenna that results in interference with the unit.

5.4.16 Flaps

NOTE

Electrical Control System (GAD 27) must be present in the system in order to display the Flap Configuration Page.

The Flaps Configuration tab contains the following configurable parameters:

Flap Switch Mode

- In Absolute Position mode, the flaps move to one of four absolute positions in response to an active low on the flap discrete inputs, and there are no speed constraints.
- In Relative Position mode, the switch up/switch down flap motion is relative to the last position and there are optional speed constraints on partial/full flap deployment.

Full Flap Max Airspeed

Enter maximum airspeed for full flap deployment. (Relative Position mode only)

Partial Flap Max Airspeed

Enter maximum airspeed for partial flap deployment, entry must be greater than the full flap maximum airspeed. (Relative Position mode only)

The airspeed values are only used in conjunction with the flap control and appear only when the GAD 27 is present. These values do not affect airspeed display.

The GAD 27 flap wiring examples provide one example of a Relative Position flap switch installation and three examples of Absolute Position flap switch installation.

NOTE

There must be intermediate flap positions configured (more than only 0 and Full) for the partial flap maximum airspeed selection to be available.

NOTE

Automatic flap movement is not supported in configuration mode. Hold the flap switch for one second or longer (Relative Position) or use the screen controls on the flap position sensor calibration page (Absolute Position) to perform manual flap movement.

5.4.17 External Lighting

NOTE

Electrical Control System (GAD 27)must be present in the system in order to display the External Lights Configuration Page.

The external lights configuration page is used to set up the landing and/or taxi lights for alternating flashing. The lights are labeled Flash Light 1 and Flash Light 2, and the user may define their purpose.

Flash Selection

Can be set to Light 1 to only flash lighting output 1, Light 2 to only flash the lighting output 2, or Flash Both Lights to flash both lighting outputs. If both lighting outputs are flashed, they will alternate (i.e. while light 1 is on, light 2 is off and vice versa).

Automatic Flashing

The lighting outputs may be flashed by the use of an external switch (not controlled through software), by use of an automatic switch on airspeed, or both. The automatic (airspeed controlled) flashing must be enabled to allow an airspeed value to be entered. The airspeed value should be greater than the final approach speed of an airplane so the lights will not flash during landing.

Light Priority

Controls the interaction between light flashing behavior and external light switches.

- When set to *Flash*, if other settings on the External Light page determine that an external light should flash, it will flash regardless of the state of its associated switch.
- When set to *Switch (On)*, an external light will be steady on any time its switch is on, and can be either off or flashing when its switch is off.
- When set to *Switch (Off)*, an external light will be steady off any time its switch is off, and can be either on or flashing when its switch is on.

Warmup Time

For lighting systems requiring a warmup time (such as HID lights), select a value closest to the recommended warmup time without being smaller (than the lighting system's recommended warmup time). For example, if the recommended warmup time for a lighting ystem is 22 seconds, then the 25 second option should be selected.

5.5 A&P (Airframe and Powerplant)

The Airframe and Powerplant Application allows enabling/disabling the engine and airframe sensors, and customization of the attributes of the EIS display and engine page. Configuration of system discrete inputs is also supported by this application.

The Airframe and Powerplant application can include the following tabs, based on configuration:

- Sensor Inputs
- Discrete Inputs
- Outputs
- Times & Cycles
- Lean Assist
- Fuel Calculator
- General

NOTE

FADEC controlled engines, add the relevant FADEC device to the system using the Add Device workflow described in section 5.3.1 before continuing.

NOTE

This application configures the inputs for any connected GEA 24, GSU 73, GEA 110, GAD 27, GDU 116C/NC, or remote GTR radio. These LRUs must be added to the system using the Device Application before using this application. Refer to section 5.3.1.

Refer to section 3.1.2 for guidance on acceptable sensor selection.

5.5.1 Gauge Priority

When all system sensor inputs have been configured per section 5.5.2, each gauge will be organized in the EIS strip per a pre-determined layout. This layout prioritizes gauges as required by most CAAs in operational rules. In the case that there is not enough room on the EIS strip, some gauges are only shown on the dedicated engine page in normal mode.

Touch **Gauge Priority** of the General tab in the A&P app to organize the EIS strip.

Each sensor that was pre-populated on the EIS strip appears in the section titled On Strip, and can be reorganized in any order desired, using the up and down arrows.

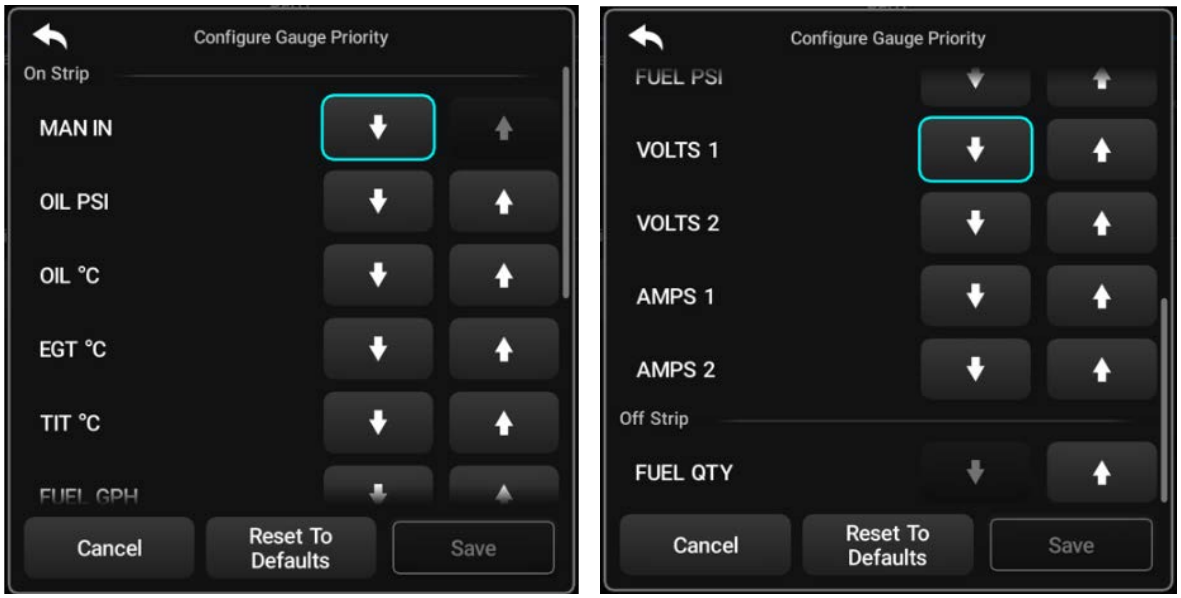

Figure 5-15 Gauge Priority Screen

If enough sensors are configured that results in some sensors only being shown on the dedicated EIS page, those gauges are displayed in the list under a separate header, Off Strip. These sensors can be moved into the On Strip section, using the up arrow. This will simultaneously result in last sensor in the On Strip section, being demoted to the Off Strip section. In the example, touching the up arrow next to FUEL QTY, moves the fuel quantity sensor into the On Strip group, and demotes AMPS 2 to the Off Strip group.

Touch **Save** to save changes. **Reset to Defaults** will reverse any changes made and revert to the pre-determined system layout.

5.5.2 Sensor Inputs

When selected, the Sensor Input tab presents a selection of analog and digital appropriate for the connected EIS LRU type (GEA 24, GEA 110 or GSU 73).

5.5.2.1 Generic Sensor Configuration Options

Many of the items listed in the Sensor Inputs Configuration tab have the same (or similar) configuration options.

Sensor Selection

Select the sensor type that is interfaced to the system for the specified function. Refer to section C.11 and section C.12 for compatible sensors.

Twin Engine

If two EIS LRUs are configured, each engine-related parameter can be configured for “Twin Engine.” If “Twin Engine” is selected, data for that parameter will be acquired from both EIS LRU #1 and #2, and presented on the display using a dual gauge. The gauges for both engines will use the same configuration. Airframe-related parameters such as fuel quantity or trim/flap position are supported on EIS LRU #1 only.

Show Ticks

Toggle this setting on and off to show or hide tick marks on a gauge.

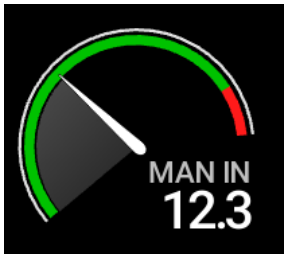

Show on Strip

Toggle this setting to show or hide the specified sensor on the EIS strip. If not shown on the EIS strip, the gauge is still available in the Engine menu.

Gauge Style

Select from Normal, Text only or Condensed. Use this setting to change the appearance of the gauge. This can be used to accommodate higher numbers of sensors in the EIS strip.

Normal

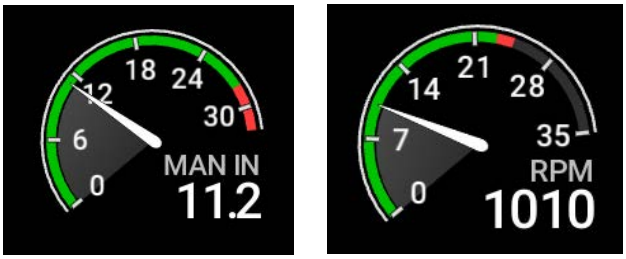

Condensed

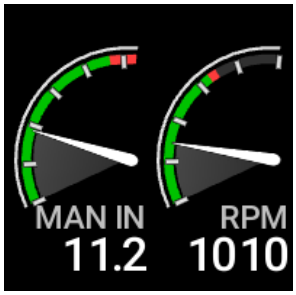

Text Only

Gauge Maximum and Minimum

Select the minimum and maximum values of each gauge.

Gauge Markings and Alerts

Used to create gauge markings, band and tick marks on the specified gauge.

The Yellow Range + Alert settings will issue a CAS (Crew Alerting System) on-screen alert anytime the value is within that range.

The Red Range + Alert settings will issue a CAS audible and on-screen alert anytime the value is within that range.

The Invisible Range + Alert setting will issue a CAS message anytime the required thresholds are met.

The following are the available gauge marking options:

- White Range
- Cyan Range
- Green Range
- Yellow Range
- Yellow Range + Alert
- Red Range
- Red Range + Alert
- Tick Mark
- White Line
- Cyan Line
- Green Line
- Yellow Line
- Red Line

5.5.2.2 Individual Sensor Considerations

In addition to the generic configuration guidance in section 5.5.2.1, this section outlines additional considerations for each sensor function type.

5.5.2.2.1 Manifold Pressure

Reference section C.12 for complete list of supported sensor types.

Sensor Type: Engine Torque

This input provides for display of torque for turbine engine applications using common torque pressure sensors. Refer to section 5.5.2.2.7 for more information.

Sensor Type: Custom

This option allows the installer to enter up to eight points of voltage-to-pressure calibration. Refer to pin description in appendix A for allowable input voltage range.

Sensor Type: FADEC

The GEA 24 can be configured to monitor manifold pressure data from the following FADEC interfaces:

- Rotax (912iS/915iS/916iS)
- Lycoming (iE2)
- ULPower

5.5.2.2.2 RPM 1/2

Refer to section C.12 for complete list of supported sensor types.

NOTE

External components are required when using the Rotax Trigger Coil configuration with the GSU 73. Refer to appendix B.

NOTE

Magneto P-Lead is an option for RPM, as MOD Level 2 GEA 24 or any GEA 24B units are capable of being connected to a magneto P-Lead. If interfacing to a magneto, a series resistor must be included as shown in figure B-9.19. Only a MOD Level 2 GEA 24 can be connected to a P-Lead. Do not connect MOD Level 1 or MOD Level 0 units to a P-Lead. The MOD Level status can be determined by checking the serial tag on the unit. If a P-Lead is connected to a non-MOD Level 2 GEA, an "Engine Interface 1 configuration error" System Message will be generated, and configuration status will be reported to be in error in the system information menu.

NOTE

The SureFly TACH2 module is configured as an electronic ignition when a SureFly Ignition Module (SIM) is installed. The TACH2 outputs a 0-5V rpm signal to the GEA for a SureFly Ignition Module (SIM).

Sensor Type: Electronic Ignition

Lycoming and Continental electronic ignitions typically output two pulses/revolution for 4-cylinder engines and three pulses/revolution for 6-cylinder engines.

Sensor Type: FADEC

The GEA 24 can be configured to monitor RPM data from the following FADEC interfaces:

- Rotax (912iS/915iS/916iS)
- Lycoming (iE2)
- ULPower

Sensor Type: Custom

These options allows the installer to enter up to 8 points of frequency-to-RPM calibration, using any RPM sensor that has a known frequency output. The custom RPM configurations accept frequency values up to either 500 Hz, 1 kHz, 10 kHz, and 50 kHz. The lower-frequency configuration is better suited to noisy RPM signals. Custom RPM configurations also support engine speed that display in percent instead of RPM. Refer to pin description in appendix A for supported digital signal characteristics.

NOTE

The Sandia ST26 tach converter is required to support turbine engine RPM.

RPM Input 2

A second RPM input is provided (RPM 2 input on the GEA 24 and GEA 110, CAP FUEL 1/RPM 2 on the GSU 73). For piston engines, a second RPM input from an electronic ignition system can be configured. If both RPM inputs are configured, the highest of the two valid RPM values will be displayed. This configuration is useful for aircraft equipped with dual electronic ignitions, where the tach signal ceases to function during a pre-takeoff ignition check.

For turbine engines, select one of the “Custom” configurations to display a second RPM gauge. Refer to pin description in appendix A for supported digital signal characteristics.

5.5.2.2.3 Fuel Flow

Reference section C.12 for complete list of supported sensor types The Custom configuration option supports any fuel flow sensor with a maximum output frequency of up to 5 kHz. The GEA 24, GEA 110, and GSU 73 also have provisions for a second fuel flow input (FUEL RETURN) to use in aircraft that require a second fuel flow sensor for differential fuel flow measurement. When Fuel Flow is configured, an option to add a Fuel Return sensor will become available in the fuel flow menu. The displayed fuel flow will be FUEL FLOW 1 (feed) minus (return).

K Factor Calibration

The number of electrical pulses sensed per gallon of fuel flow is referred to as the K-Factor. The AXIS system uses the configured K-Factor to convert pulse frequency to fuel flow. When installing the fuel flow sensor, the installer should take note of number on the tag attached to the sensor (if applicable). This number is the calibrated K-Factor of the sensor. For sensors that are not supplied with a specific calibration value, use the default K-Factor value provided.

Although each fuel flow sensor has a default K-Factor value, aspects unique to each installation will affect the accuracy of the initial K-Factor, and as a result the K-Factor must generally be adjusted up or down for accurate fuel flow measurement.

If the fuel usage reported by the AXIS system differs from the actual fuel usage, as measured at the fuel pump (or other trusted method of measurement), use the following formula to calculate a corrected K-Factor, which can then be used to calibrate the fuel flow. Corrected K-Factor = ([AXIS reported fuel used] x [previous K-factor] / [actual fuel used].

NOTE

Fuel Flow calibration can also be adjusted up to ± 10% in Normal mode. Refer to AXIS Pilot's Guide (P/N 190-03123-01).

Sensor Type: FADEC

The GEA 24 can be configured to monitor fuel flow data from the following FADEC interfaces:

- Rotax (912iS / 915iS / 916iS)
- ULPower

5.5.2.2.4 Oil Pressure

Reference appendix C.12 for complete list of supported sensor types.

NOTE

For the GSU 73, the Rotax and Jabiru oil pressure sensors should be connected to a GP input instead of the oil pressure input.

NOTE

For the GEA 110, the Beech 102-389017 oil pressure sensor should be connected to GP 1 or 2 input instead of the oil pressure input.

Sensor Input: Custom

This option allows the installer to enter up to 8 points of voltage-to-pressure calibration. Refer to pin description in appendix A for allowable input voltage range.

Sensor Input: FADEC

The GEA 24 can be configured to monitor oil pressure data from the following FADEC interfaces:

- Rotax (912iS / 915iS / 916iS)
- Lycoming (iE2)
- ULPower

NOTE

The Rotax 456180 and 956413 oil pressure sensors require an external resistor for proper functioning. Refer to figure B-11.1 and figure B-12.2.

5.5.2.2.5 Oil Temperature

Reference appendix C.12 for complete list of supported sensor types.

Sensor Input: FADEC

The GEA 24 can be configured to monitor oil temperature data from the following FADEC interfaces:

- Rotax (912iS / 915iS / 916iS)
- Lycoming (iE2)
- ULPower

5.5.2.2.6 Fuel Pressure

Reference appendix C.12 for complete list of supported sensor types.

Sensor Input: Custom

This option allows the installer to enter up to 8 points of voltage-to-pressure calibration. Refer to pin description in appendix Afor allowable input voltage range.

Sensor Input: FADEC

The GEA 24 can be configured to monitor fuel pressure data from the following FADEC interfaces:

- Rotax FADEC (SCU)
- Lycoming (iE2)
- ULPower

Rotax FADEC engines (912iS / 915iS / 916iS) that require fuel pressure to be measured relative to manifold pressure may use a differential pressure sensor such as the UMA 1EU70D. Alternatively, these installations may use a single-input gauge pressure sensor and change the configuration of the “Pressure Reference” item to “Manifold Pressure.” This does not apply to installations which include the RS Flight Systems SCU 9iS propeller speed controller and select “Rotax FADEC (SCU)” for the sensor.

5.5.2.2.7 Engine Torque

Reference appendix C.12 for complete list of supported sensor types.For turbine engines, the GEA 24 Manifold Pressure input can be used to measure engine torque. Typically this takes the form of a pressure measurement that is converted to a torque display using installer-provided calibration.

If a standard pressure sensor is configured, the installer can to enter up to 8 points of pressure-to-torque calibration. For other sensor types, select “Engine Torque (Custom)” and enter up to 8 points of voltage-to-torque calibration. Refer to pin description in appendix A for allowable input voltage range.

5.5.2.2.8 Volts 1/2

The GEA 24(B) has provisions to monitor the bus voltage from multiple different sources. Bus voltage for Volts 1 and Volts 2, under the electrical header, can be connected to the dedicated bus voltage input pins on the EIS LRU, measured internally by the EIS LRU, or communicated from a connected engine FADEC, to the EIS LRU.

Bus voltage for Volts 1 and Volts 2 under the VPX Electrical header, can be provided by a Vertical Power VP-X unit. If a VP-X is not configured in the system, these options will not be shown.

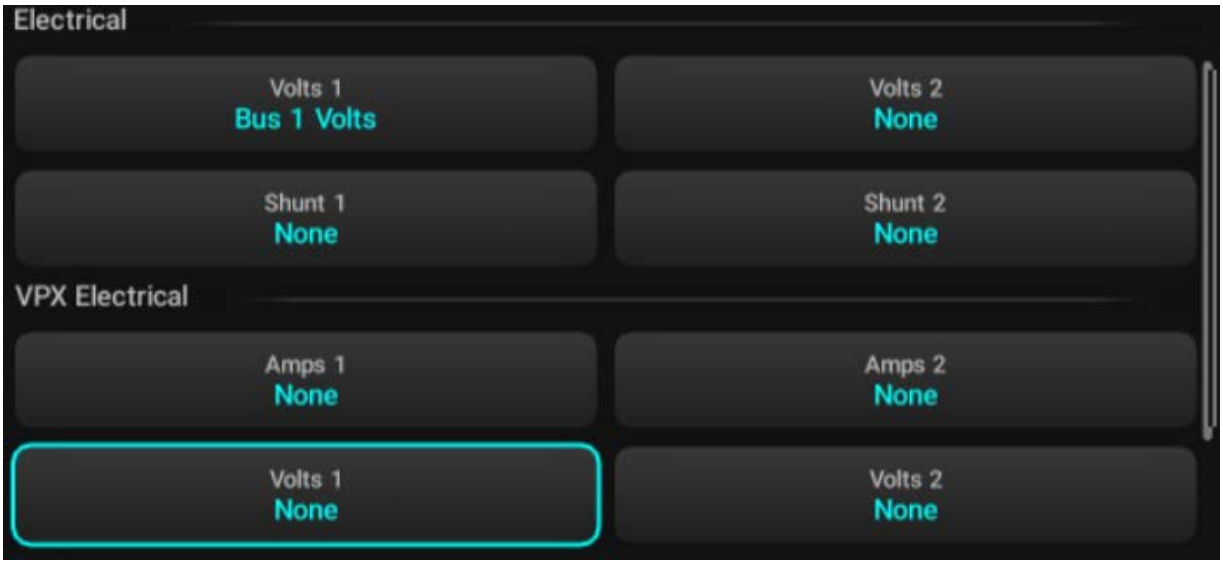

Figure 5-16 Volts 1/2 Page

5.5.2.2.8.1 EIS LRUs (Electrical)

The following sources of voltage input data are available, for both the Volts 1 and Volts 2 Sensor Input selections for EIS LRUs:

Voltage Input Pins

The VOLTS 1 and VOLTS 2 input pins on the GEA 24, GEA 110 and GSU 73 can be configured to monitor a dedicated bus voltage input connection.

Multiple options are provided for the dedicated voltage pins. The only difference is the text labels used to display the voltage gauges in the EIS strip and Engine Page:

VOLTS 1 can be configured either as “Bus 1” or “Main Bus”, or set to “Custom Volts”, which allows the installer to define the displayed gauge name.

VOLTS 2 can be configured either as “Bus 2,” “Aux Bus,” “Essential Bus,” “Backup Battery,” or “Custom Volts” which allows the installer to define the displayed gauge name.

If “Installer Mode” is enabled, a “Calibrate” option is available. This allows the user to specify a “Scale Factor” and “Zero Offset” for the voltage gauge, which control the sensor response, and calibration zero point, respectively.

EIS Power Inputs

The GEA 24 and GSU 73 can use, as an alternative to the normal voltage input pins, the AIRCRAFT POWER pins that are used to power to the EIS LRU. Configure the VOLTS 1 sensor input to EIS Power Input 1 Volts to monitor AIRCRAFT POWER 1 and configure the VOLTS 2 input to EIS Power Input 2 Volts to monitor AIRCRAFT POWER 2.

Multiple options are provided for EIS Power Input. The only difference is the text labels used to display the voltage gauges in the EIS strip and Engine Page:

EIS Power Input 1 can be configured as “EIS Power Input 1 (Bus 1)” or “EIS Power Input 1 (Main Bus,)” or set to “EIS Power Input 1 (Custom),” which allows the installer to define the displayed gauge name.

EIS Power Input 2 can be configured as “EIS Power Input 2 (Bus 2),” “EIS Power Input 2 (Aux Bus),” “EIS Power Input 2 (Essential Bus),” “EIS Power Input 2 (Backup Battery),” or “EIS Power Input 2 (Custom),” which allows the installer to define the displayed gauge name.

FADEC

The GEA 24 can be configured to monitor ECU bus voltage from the following FADEC interfaces:

- Rotax (912iS/915iS/916iS – both Lane A and Lane B can be selected on Volts 1/2 respectively)
- ULPower
- Lycoming

Other

Additional bus voltages (more than two buses) may be monitored using custom configuration and calibration of GP inputs, by setting the GP input to “Custom Analog (Volts).” Refer to section 5.5.2.2.23, for further information.

5.5.2.2.8.2 Vertical Power Volts 1/2 (VPX Electrical)

When a Vertical Power unit is configured using the Devices Application, a dedicated VPX selection exists for Volts 1 and Volts 2. The connected Vertical Power unit is the data source for both of these options. There are multiple options for VPX Volts 1 and Volts 2, the only difference is the text labels used to display the voltage gauges in the EIS strip and Engine Page:

- Volts 1 can be assigned to “Vertical Power Main Battery Volts” or “Vertical Power Bus 1 Volts.”
- Volts 2 can be assigned to “Vertical Power Aux Battery Volts” or “Vertical Power Bus 2 Volts.”

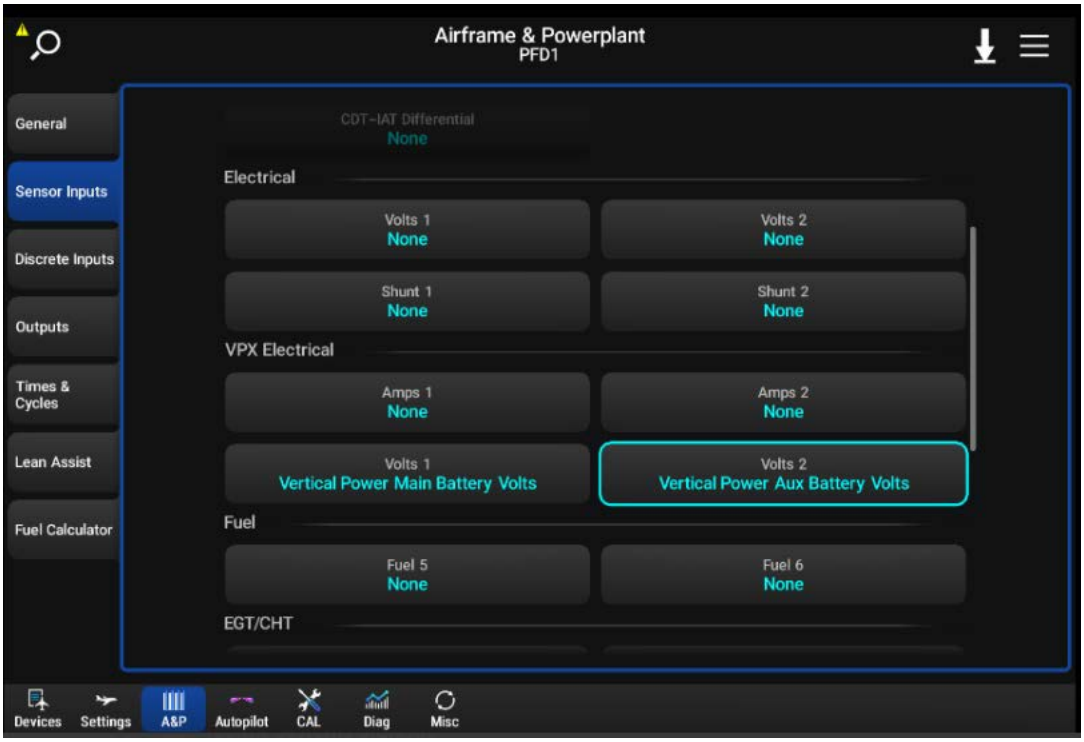

Figure 5-17 Sensor Inputs Page - VPX Electrical

5.5.2.2.9 Electrical Current (Amps 1/2, Shunt 1/2)

The GEA 24, GEA 110 and GSU 73 have provisions to monitor bus current from two different sources.

Current can be measured either using a shunt resistor such as the UMA 1C4 (50mV/100A type) or a Hall Effect sensor such as the Amploc KEY100 series.

Bus current sensing using the dedicated Shunt 1 and Shunt 2 inputs of a connected GEA 24, GEA 110 or GSU 73, is configured under the electrical header.

Hall Effect sensors can be assigned to any GP input of a connected GEA 24, GEA 110 or GSU 73 in the system.

In addition, bus current can be provided to the system using the Amps 1 and Amps 2 selections under the VPX electrical header, if a VP-X unit is configured in the system, through the same RS-232 path it uses to communicate with the AXIS Display. If a VP-X is not configured in the system, these options will not be shown.

5.5.2.2.9.1 Shunt Sensors

The SHUNT 1 and SHUNT 2 input pins on the GEA 24, GEA 110 and GSU 73 can be configured to monitor a dedicated bus current input connection. Shunt sensors are connected to the SHUNT 1 and SHUNT 2 inputs on the GEA 24, GEA 110 and GSU 73.

Shunt sensors can be calibrated to adjust for installation differences (refer to section 5.5.2.2.9.3).

Multiple options are provided for the dedicated shunt input pins. The only difference is the text labels used to display the voltage gauges in the EIS strip and Engine Page:

SHUNT 1 can be configured as “Bus 1 Amps,” “Main Bus Amps,” “Alternator Amps,” “Battery Amps,” “Custom Amps” or set to “Custom Alternator Amps,” which allows the installer to define the displayed gauge name.

SHUNT 2 can be configured as “Bus 2 Amps,” “Essential Bus Amps,” “Alternator Amps,” “Battery Amps,” “Custom Amps” or set to “Custom Alternator Amps,” which allows the installer to define the displayed gauge name.

NOTE

The “Alternator” specific selections incorporate pre-defined gauge parameters specific to sensing current of an alternator in the system.

5.5.2.2.9.2 Hall Effect Sensors

Hall Effect current sensors can be connected to the GEA 24, GEA 110, or GSU 73 general purpose (GP) inputs.

Hall Effect sensors can be calibrated to adjust for installation differences (refer to section 5.5.2.2.9.3).

Multiple options are provided for hall effect sensors on the GP inputs. The only difference is the text labels used to display the voltage gauges in the EIS strip and Engine Page:

- Bus 1 Amps (Hall Effect)
- Bus 2 Amps (Hall Effect)
- Main Bus Amps (Hall Effect)
- Essential Bus Amps (Hall Effect)
- Alternator Amps (Hall Effect)
- Battery Amps (Hall Effect)
- Custom Amps (Hall Effect)
- Custom Alternator Amps (Hall Effect)

5.5.2.2.9.3 Hall Effect and Shunt Sensor Calibration

NOTE

Amps calibration is required for all configured amp shunts and hall effect sensors. This calibration is not necessary for Vertical Power derived bus current gauges.

Scale Factor

Either Multiplier or millivolts per Amp (mV/Amp) can be selected, For most installations, the Multiplier setting will remain set to the default (1.00) value. A typical use for the Multiplier setting is for a Hall Effect current sensor that has the current-carrying conductor looped through the sensor twice. In that case the scale factor should be set to 0.50 to give the correct current reading. The mV/Amp setting is useful when using a current sensor (either shunt or Hall effect) where the sensor response is specified in mV/A.

Zero Offset

The Amps Offset calibration can be performed to compensate for any residual current readings that cannot be "zero'ed out." For example, if the amps gauge reads +0.2 amps, with no current being drawn, an Amps Offset of -0.2 can be entered and saved, thus correcting the amps gauge reading to 0.0 amps. If no compensation is needed, calibration is not necessary and the default value of 0.0 will be used. This setting is most commonly used with Hall Effect current sensors because of the inherent variability of some of these type sensors.

Zero Deadband (Amps)

Sets a range of values that will be displayed as zero on the gauge.

Sensor Value (mV)

Displays the actual voltage as measured by the sensor.

Calibrated Amps

Displays the value that will be displayed on the gauge. This value is derived from the Sensor Value plus any adjustments made by the Scale Factor, Zero Offset, and Zero Deadband settings. The measured current is first multiplied by the scale factor, then the offset value is added. If the resulting current value is less than the deadband value, the displayed current will be 0.

5.5.2.2.9.4 Vertical Power Amps 1/2 (VPX Electrical)

When a Vertical Power unit is configured using the Devices Application, a dedicated VPX selection exists for Amps 1 and Amps 2. The connected Vertical Power unit is the data source for both of these options. There are multiple options for VPX Amps 1 and Amps 2, the only difference is the text labels used to display the voltage gauges in the EIS strip and Engine Page:

- Amps 1 can be assigned to "Vertical Power Main Bus Amps" or "Vertical Power Bus 1 Amps"
- Amps 2 can be assigned to "Vertical Power Bus 2 Amps"

5.5.2.2.10 Fuel Quantity 1/2

The GEA 24 and GSU 73 support fuel quantity inputs from both analog (resistance or voltage) and digital (frequency) sensors. “Float” type resistive fuel quantity sensors are analog devices. Capacitive fuel quantity sensors may be analog or digital devices, depending on whether they output a voltage (analog) or a frequency (digital).

The GEA 110 supports four fuel quantity inputs (Fuel 1 through 4), any of which can be used with a resistive, analog, or digital fuel quantity sensor.

NOTE

When in-line resistors are installed use “Voltage” configuration setting, if in-line resistors are not installed, use “Resistive” configuration setting.

NOTE

Refer to appendix J for information regarding swapping GEA 24 and GEA 24B units.

The GEA 24 supports four fuel quantity inputs (FUEL 1 through 4), any of which can be used with an analog or digital fuel quantity sensor.

The GSU 73 supports four analog fuel quantity inputs (FUEL 1 through 4) and two digital fuel quantity inputs (CAP FUEL 1 and 2). Of these inputs, up four can be configured at any one time.

The GEA 110 supports four analog fuel quantity inputs (FUEL 1 through 4).

For both the GEA 24 and GSU 73, up to four fuel quantity measurements may be configured, using one item from each of the following groups:

- Group 1 - Fuel Quantity 1, Main Fuel 1
- Group 2 - Fuel Quantity 2, Main Fuel 2
- Group 3 - Aux Fuel 1
- Group 4 - Aux Fuel 2

If the CUSTOM FUEL setting is used in place, the installer can specify the gauge name that is displayed for that input.

Analog and digital fuel quantity inputs may be configured interchangeably for the above listed Groups 1-4. The “Fuel Quantity” and “Main Fuel” configurations are functionally the same, only the displayed text differs.

When configuring multiple Fuel Quantity inputs, touch Fuel Tank Order to adjust the where each gauge will appear on the EIS strip. Adjust the priority so that fuel tanks on the left side of the aircraft appear on the left side of the strip and fuel tanks on the right side of the aircraft appear on the right side of the strip.

CAUTION

GEA 24 (010-01042-00) and GEA 24B (P/N 010-02770-00) are fit/form/function the same, with the exception of Fuel Quantity inputs. If a GEA 24 in an existing installation is replaced with a GEA 24B or vice versa, all Fuel Quantity inputs set as Resistive inputs must be re-calibrated.

NOTE

A previously installed GEA 24 requires parallel 2.2k Ω resistors for each resistive fuel quantity input and must be configured as a Voltage interface. New installations of a GEA 24B will not use resistors in the resistive fuel quantity wiring and must be configured as a resistive interface. If the GEA 24B is used to replace an existing GEA 24, a new fuel calibration is required.

NOTE

The GSU 73 FUEL 3 and 4 analog inputs require an external pull-up resistor when used with a resistive analog fuel quantity sensor.

5.5.2.2.10.1 Fuel Quantity Calibration Import

NOTE

All Fuel quantity sensors must be configured prior to loading or performing the fuel calibration.

To reload a previous **Fuel Quantity Calibration** that was exported from a previously installed G3X Touch system, use the following procedure:

1. Insert the USB-C drive containing the calibration file into the port on the front of the AXIS flight display (allow up to 1 minute for the display to recognize the drive).

NOTE

When a fuel calibration file is exported from the G3X Touch, it is saved in the Garmin/cal folder on the SD card. Copy the entire Garmin/cal folder, including its contents, to the root directory of a USB-C drive. Do not place it inside another folder.

2. From the Fuel Quantity Calibration page, press the **MENU** key or touch in the top right corner.
3. Touch **Read Calibration File**.
4. Repeat for each Fuel Quantity Sensor Input.

NOTE

If a GEA 24 is replaced by a GEA 24B, any fuel quantity interfaces to resistive probes must be recalibrated regardless of whether the 2.2k Ω resistors in the harness are retained or removed.

5.5.2.2.10.2 Fuel Quantity Calibration Procedure

NOTE

It is advised to back up calibration data to USB flash drive after performing fuel quantity calibration. Changing the configuration for a fuel quantity input may reset calibration data.

The calibration of fuel quantity sensors requires adding a known fuel quantity. Use a calibrated/verified fueling system. Two fuel calibration curves are supported: the Normal Flight Attitude calibration curve and an optional Ground/Taxi Attitude calibration curve. The Ground/Taxi Attitude calibration curve is used for aircraft that have a significantly different attitude when on the ground, such as tail wheel aircraft. If no calibration data is entered for the Ground/Taxi Attitude calibration, then the Normal Flight Attitude calibration will be used both when the aircraft is in flight and on the ground. The displayed fuel quantity switches automatically based on GPS groundspeed, indicated airspeed, and height above ground.

Figure 5-18 Fuel Quantity Calibration Example

Use the keys on the bottom left of the page to switch between the normal flight and the ground/taxi calibration curves. Since the ground/taxi attitude calibration is optional and only available when the normal flight attitude calibration data has been entered, that selection is grayed out until calibration points are entered and saved for the normal flight attitude curve.

NOTE

It is recommended that the fuel tank be lightly tapped several times after fuel is added before entering each calibration point. This is performed to aid in overcoming the friction of the float. This is especially important for resistive senders.

To perform the Fuel Quantity Calibration:

1. Drain all fuel from the tank.
2. Orient the aircraft appropriately for the calibration curve (normal flight or ground/taxi) being performed.
   - For the normal flight curve, level the aircraft.
   - For the ground/taxi curve, ensure the aircraft is sitting in a normal ground attitude on a level surface.
3. Select the appropriate sensor and touch **Calibrate** to display the calibration page for the selected fuel probe.
4. Add unusable fuel.
5. Manually vibrate the area near the fuel sensor to prevent the float from sticking and to improve the sensor response.
6. Touch **Add Calibration Point** and enter *0.0* GAL and then touch **Enter** > **Yes**. At least five additional calibration points are required.
7. Add a known quantity of fuel (e.g., 5.0 gallons) into the fuel tank. Enter that same quantity in the Actual Fuel Quantity field.

NOTE

The resulting sensor value displayed in the Input Voltage (or Input Frequency) field should change when fuel is added.

8. Manually vibrate the area near the fuel sensor to prevent the float from sticking and wait at least two minutes for the reading to stabilize.
9. Touch **Add Calibration Point**.
10. Repeat steps 7 through 9 until the fuel tank is full or until the input voltage/frequency is no longer changing when fuel is added (the float may reach its upper limit of travel before the tank is completely full). Verify at least five calibration points were used.
11. Record the fuel quantity at which the float reaches its upper limit, if applicable. If any points were added after the float reached its upper limit (indicated by a vertical line on the calibration curve), the additional point(s) must be deleted.
    a. To delete a calibration point, highlight the desired data point in the list and touch **Delete Point**.
12. Touch **Save** once the calibration is complete.
13. Touch **Save** again on the ***Edit Input*** page to ensure the fuel calibration curves are saved.
14. Follow the instructions in section 5.9.3.1 to export the calibration data.

A yellow line on the graph indicates potentially incorrect/invalid info. Fuel quantity inputs configured for digital sensing are calibrated in the same manner as resistive and voltage senders except that the resulting frequency in kHz from the sensor is displayed instead of the voltage. Frequencies up to 50 kHz are supported.

5.5.2.2.11 Trim/Flap Position

The GEA 24, GEA 110, and GSU 73 each have multiple GP inputs. Each GP input can be used with a resistive (potentiometer) sensor to monitor the following position measurements:

- Elevator Trim
- Aileron Trim
- Rudder Trim
- Flap Position

NOTE

The GEA 24 GP 6 and GP 7 inputs require the LO side of the input to be connected to ground. Refer to appendix B for wiring details.

Vertical Power

When using a Vertical Power unit, trim and flap positions will automatically be displayed. Connecting, configuring, and calibrating the GP inputs is not required when the position sensors are connected to a Vertical Power unit. All GP inputs require calibration, as described below.

NOTE

Flap and trim faults on the VP-X cannot be reset from AXIS flight displays.

Trim/Flap Position Input Calibration

This procedure allows precise calibration of control surface position sensors, by moving the control surfaces to pre-defined positions, and capturing calibration points for each position. To calibrate trim/flap position inputs:

1. From the GP input configuration page, touch **Calibrate** to display the Calibration Page. The current input voltage field on the bottom of the screen will display the currently sensed voltage for the selected input.

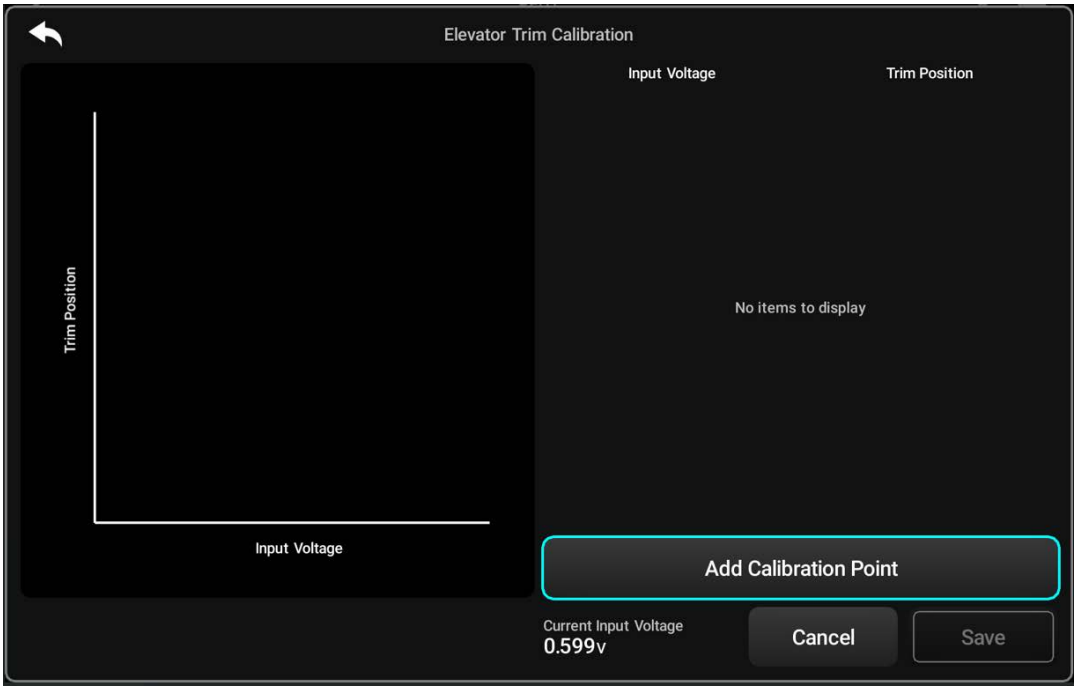

Figure 5-19 Elevator Trim Calibration

2. For trim position, three positions are typically calibrated, 0, -100, and +100. As an example, for pitch trim, 0 would correspond to the position in which the trim tab is centered. -100 would be full pitch up trim, and +100 would be full pitch down trim. Move the trim tab to the first position to be calibrated.
3. Touch the **Add Calibration Point** key, and enter the position value. This correlates the currently sensed input voltage with the specified position. Once, entered, a popup will allow the user to confirm the position and input voltage pair. Touch yes to accept.

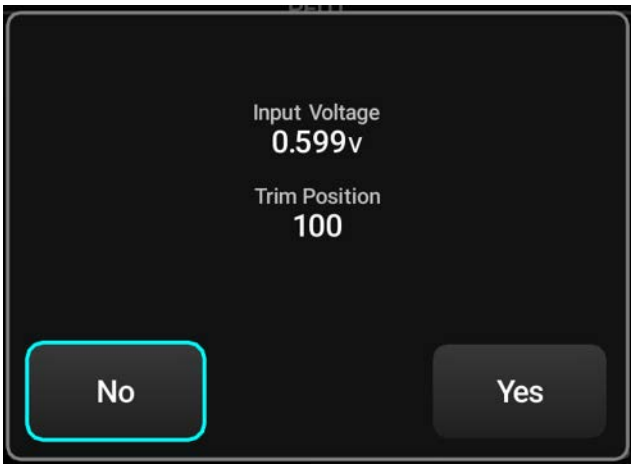

Figure 5-20 Input Voltage

4. Repeat steps 2 and 3 for each desired position calibration. A calibration point may be modified or deleted by touching the calibration point in the list on the right hand side of the screen.

NOTE

The resulting sensor value (in volts) displayed in the Sensor Value field (the sensor value should change with each change in trim/flap position.

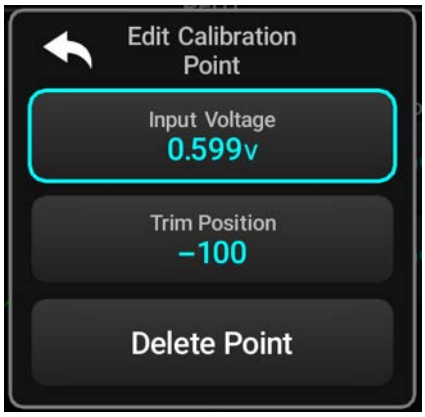

Figure 5-21 Edit Calibration Point

5. Touch **SAVE** to store calibration data.

NOTE

*The **Invert** setting can be used to invert the gauge, for an input assigned to elevator trim.*

Repeat this process for each of the General Purpose input assigned to Trim or Flaps.

5.5.2.2.12 EGT

The EGT inputs on the GEA 24, GEA 110 and GSU 73 support configuration of Type K thermocouples.

FADEC

The GEA 24 can be configured to monitor exhaust gas temperature data from the following FADEC interfaces:

- Rotax (912iS/915iS/916iS)
- Lycoming (iE2)
- ULPower

Number of Cylinders

If two EIS LRUs are configured, up to six cylinders may be configured per engine for a twin-engine, or up to twelve cylinders for a single engine.

In a single-engine application, cylinders 1-6 are connected to EGT 1-6 on EIS LRU #1, and cylinders 7-12 are connected to EGT 1-6 on EIS LRU #2.

NOTE

The EGT 5/6 inputs on the GEA 24 have multiple functions. If EGT configuration is set to 5- or 6-cylinder engine, the TEMP5/6 inputs are unavailable, as those sensor presets use the same pins and EGT inputs takes precedence.

NOTE

The EGT 6/MISC PRESS input on the GSU 73 has multiple functions. The GSU 73 EGT 6/MISC PRESS input is unavailable for other uses if assigned as an EGT input in the EGT Configuration menu.

5.5.2.2.13 CHT

The following sensors can be configured for the CHT inputs on the GEA 24, or GSU 73:

- Type J thermocouple
- Type K thermocouple
- Thermistor (any VDO or similar 50-150°C thermistor)
- Rotax 965531
- Rotax 966385

NOTE

For the GEA 24, thermistor CHT sensors (including Rotax CHT sensors) are connected to different input pins.

NOTE

For the GSU 73, thermistor CHT sensors (including Rotax CHT sensors) are connected to GP input pins.

The GEA 110 supports Type K or Type J thermocouples for this function.

FADEC

The GEA 24 can be configured to monitor cylinder head temperature data from the following FADEC interfaces:

- Lycoming (iE2)
- ULPower

Number of Cylinders

If two EIS LRUs are configured, up to six cylinders may be configured per engine for a twin-engine, or up to twelve cylinders for a single engine.

In a single-engine application, cylinders 1-6 are connected to CHT 1-6 on EIS LRU #1, and cylinders 7-12 are connected to CHT 1-6 on EIS LRU #2.

Shock Cooling

If enabled, an indication of rapid cylinder head temperature cooling is provided on the CHT gauge. The trigger for this indication is when the fastest changing cylinder head temperature, declines at a rate greater than or equal to 50° F per minute.

NOTE

The CHT 5/6 inputs on the GEA 24 have multiple functions. If CHT configuration is set to 5 or 6 cylinder engine, the TEMP3/4 inputs are unavailable, as those sensor presets us the same pins and CHT inputs takes precedence.

5.5.2.2.14 Carburetor Temperature

Carburetor Temperature is supported on GEA 24 Temp 1-6. Reference section C.12 for complete list of supported sensor types.

NOTE

GEA 24 TEMP 5/6 support thermocouple sensors only.

NOTE

GEA 110 supports Carburetor Temperature on a dedicated input.

5.5.2.2.15 Manifold Air Temperature

The GEA 24 can be configured to monitor manifold air temperature data from the Rotax 912iS/915iS/916iS FADEC interface, using any GP temperature input (TEMP 1-6).

NOTE

This option is only available when a FADEC has been added to the system using the Devices application.

5.5.2.2.16 Turbine Inlet Temperature (TIT), Turbine Outlet Temperature (TOT), or Turbine Interstage Temperature (ITT)

One or two Type K thermocouples can be connected for turbine inlet temperature monitoring, using the MISC TEMP 1-6 inputs on the GEA 24. GEA 110 GP inputs 1, 2, 5 and 6 or GSU 73 GP input 1 or 2.

Alternatively, TEMP 1-6 inputs can alternatively be configured to monitor a single ITT or TOT.

5.5.2.2.17 Compressor Discharge Temperature

Compressor Discharge Temperature is supported using a Type K thermocouple, with the MISC TEMP 1-6 inputs on the GEA 24. GEA 110 GP inputs 1, 2, 5, and 6 or GSU 73 GP input 1 or 2.

5.5.2.2.18 Inlet Air Temperature

Inlet Air Temperature is supported using a Type K or Type J thermocouple, with the MISC TEMP 1-6 inputs on the GEA 24. GEA 110 GP inputs 1, 2, 5, and 6 or GSU 73 GP input 1 or 2.

5.5.2.2.19 Coolant Temperature

Coolant temperature is supported on the GEA 24 Temp 1-4, GEA 110 General Purpose inputs 1 and 2, or GSU 73 GP input 5. Refer to section C.12 for complete list of supported sensor types.

The GEA 24 can be configured to monitor coolant temperature data from the Rotax 912iS/915iS/ 916iS FADEC interface, using any General Purpose Temperature input (TEMP 1-6).

NOTE

This option is only available when a FADEC has been added to the system using the Devices application.

5.5.2.2.20 Coolant Pressure

Coolant pressure is supported on any GEA 24 or GEA 110 General Purpose input, or on the GSU 73 EGT6/MISC PRESS input.

Refer to section C.12 for complete list of supported sensor types.

5.5.2.2.21 Custom Pressure

The GEA 24 and GEA 110 allow for the monitoring of installer-defined pressure measurements on any GP input. The GSU 73 supports this function on the EGT6/MISS PRESS input. These inputs allow the display of arbitrary pressure measurements, and allow the installer to specify the name of the gauge. Custom pressure inputs can be configured with pre-loaded sensor calibrations, for the sensors listed below. “Custom Pressure” can be selected, which allows the installer to create a custom calibration curve for the sensor to be used.

- Custom Pressure (Garmin GPT 75G)
- Custom Pressure (Garmin GPT 150G)
- Custom Pressure (Kavlico P4055-50G)
- Custom Pressure (Kavlico P4055-150G)
- Custom Pressure (UMA 1EM2K)

Reference section C.12 for complete list of supported sensor types.

5.5.2.2.22 Custom Temperature

The GEA 24, GEA 110 and GSU 73 allow for the monitoring of installer-defined temperature measurements. These inputs allow the display of arbitrary temperature measurements, and allow the installer to specify the name of the gauge.

The following custom temperature sensor presets are supported on TEMP 1-6 of the GEA 24, Pos 5/MISC TEMP input of the GSU 73, and General Purpose inputs 1, 2, 5 and 6 of the GEA 110:

- Custom Temp (Thermistor)
- Custom Temp (UMA 1BxR-C RTD)
- Custom Temp (MS28034)
- Custom Temp (Type K Thermocouple)
- Custom Temp (Type J Thermocouple)

NOTE

GEA 24 TEMP 5/6 support thermocouple sensors only.

The GEA 110 support custom temperature inputs on GP inputs 1, 2, 5, and 6.

NOTE

GP inputs 5 and 6 of the GEA 110 only support the thermistor and thermocouple options.

Refer to section C.12 for complete list of supported sensor types.

5.5.2.2.23 Custom Analog Measurements

The Custom Analog setting allows for the monitoring of installer-defined analog parameters, which may be used for a variety of purposes. Selecting “Custom Analog” for a GP input allows the installer to enter a custom voltage-to-numeric calibration for the connected sensor or device, as well as specify the name of the gauge.

Custom Analog gauges are available to be configured for all GP inputs of the GEA 110, GEA 24, and GP inputs 1-4 of the GSU 73.

The values displayed for Custom Analog gauges are “unitless,” which allows the GP inputs to display a calibrated value for any compatible analog voltage measurement. This includes O2 sensors, timing advance, additional bus voltage inputs, additional bus current inputs, and other applications with compatible voltage levels. Refer to appendix A for allowable input voltage range.

Use the Calibrate option, to specify the voltage-to-numeric calibration for the selected input.

NOTE

The GEA 24 GP 6 and GP 7 inputs require the LO side of the input to be connected to ground. Refer to appendix B for wiring details.

5.5.2.2.24 CDT-IAT Differential

Available if both a Compressor Discharge Temperature and Inlet Air Temperature sensor are configured in the system.

5.5.2.2.25 Custom Frequency Measurements

The Custom Frequency setting allows for the monitoring of frequency parameters, which may be used for a variety of purposes. Selecting Custom Frequency on GP input 3 or 4, allows the installer to specify a range between 0 and 10000Hz to be sensed.

5.5.2.2.26 Rotax FADEC Throttle Position

For Rotax FADEC installations, a dedicated Rotax throttle position gauge may be configured. Select "Rotax FADEC Throttle" on any available GP input.

The Rotax throttle position gauge provides an indication of optimal throttle banding as it relates to oil temperature or coolant temperature, and outside air temperature, as defined by the engine manufacturer's recommendation. When the engine is off, all configured gauge markings will be overridden by the optimal throttle position indication.

5.5.3 Discrete Inputs

Discrete inputs can be connected to a variety of external switches or voltage signals and used to generate system alerts or control other system functions. For instance, a discrete input could be configured to generate an audible alert and a CAS (Crew Alerting System) message on the PFW display when an external switch is closed. Discrete inputs can also be used to trigger certain specific actions, as described below.

Numerous system LRUs support discrete inputs in the AXIS system. The following LRUs support configurable discrete inputs:

Table 5-11 Discrete Inputs

LRU	Number of Discrete Inputs
GEA 24 #1	4 dedicated, 8 dual purpose
GEA 24 #2	4 dedicated
GEA 110 #1	5 dedicated
GEA 110 #2	5 dedicated
GSU 73	4 dedicated
GAD 27	9 dedicated
GDU 116 COM	16 dedicated
GDU 116 NAV/COM	16 dedicated
GTR 20	2 dedicated
GTR 205R(x)	4 dedicated

NOTE

COM and NAV/COM variant AXIS flight displays include 10 GP discrete inputs (J1013), and 6 discrete inputs specific to the COM or NAV/COM connector (J1015) of the GDU.

NOTE

The GEA 24 GP 6 and GP 7 inputs require the LO side of the input to be connected to ground. Refer to figure B-10.1 for wiring details.

NOTE

The GP inputs on GEA 24 #2 are not available to be used as additional discrete inputs.

To configure a discrete input, first select whether the input should be Active Low or Active High. An Active High input will be considered active when the input voltage is above an upper threshold, and inactive when the input voltage is below a lower threshold. An Active Low input will be considered active when the input voltage is below a certain threshold, and inactive when the input voltage is above a certain threshold, or if the input is floating (not connected). In general, most switch-type inputs that are either open or connected to ground should be configured as Active Low.

Refer to section A.7.9 for the specific voltage levels used for discrete input sensing on the GEA 24.

After a discrete input is configured for either Active Low or Active High, it is assigned to a specific function. The following discrete input functions are supported, dependent on which device or connector the discrete input is found.

Table 5-12 PFD Discrete Inputs

Setting	Description	Supported LRUs
Marker Beacon (Inner)	Supports external Marker Beacon Receiver, provides PFD lamp indication.	GSU 73 GEA 24 #1 GEA 24 #2 GEA 110 #1 GEA 110 #2 GAD 27 GDU 116 COM [1] GDU 116 NAV/COM [1]
Marker Beacon (Middle)		
Marker Beacon (Outer)		
User-Defined Alert	Used to display a custom alert on the PFD when the discrete input is active. Both the message text and the message color can be entered. A red alert will generate an audible warning tone.	
Terrain/Obstacle Inhibit	A secondary way to activate user-inhibit of terrain alerts. Refer to *AXIS Flight Display Pilot's Guide* for more information.	
Traffic Inhibit	A secondary way to activate user-inhibit of traffic alerts. Refer to *AXIS Flight Display Pilot's Guide* for more information.	
Radar Alt Inhibit	A momentary switch activation that inhibits radar altimeter or Radio AGL audible callouts. Inhibit condition is reset on a subsequent power cycle.	
ESP Inhibit	Used with a switch that activates the input. When in the active state (select active high or active low), the ESP (Electronic Stability and Protection) function is disabled. Refer to section 5.6.10 for ESP configuration details.	
All Annunc Ack	A momentary switch activation that acknowledges all warning and caution CAS messages.	
Reset Caution	A momentary switch activation that acknowledges all caution CAS messages	
Reset Warning	A momentary switch activation that acknowledges all warning CAS messages.	
Event Marker	When activated, the Flight Data Log records a number 1 in the Event Marker Column. This input should be connected to a momentary push-button.	
Pilot Timer Switch	Remote control for the user timer. A momentary switch activation will start/stop the user timer. Press and hold the switch to reset the timer.	
SmartGlide Activate	Can be used as an additional means to activate Smart Glide, by using a dedicated panel mounted switch. This input should be connected to a momentary push-button. A Garmin Smart Glide switch can optionally be used to activate this input (Garmin P/N 011-05930-00).	
Pitot Temp	Will display a PITOT TEMP caution message on the PFD if the outside air temperature is below approximately 5°C (41°F) and the input is not active. Configure for Active Low when used with the regulated GAP 26 (-20 version). Refer to section 5.5.3.1.	

[1] J1013 connector only.

Table 5-13 Aircraft Discrete Inputs

Setting	Description	Supported LRUs
Stall Switch	When the input is active, a red flashing STALL message appears on the PFD and a warning tone sounds continuously. (Audible stall warning tones are inhibited when the aircraft is on the ground.)	GSU 73 GEA 24 #1 GEA 24 #2 GEA 110 #1 GEA 110 #2 GAD 27 GDU 116 COM [1] GDU 116 NAV/COM [1]
AFCS Level	Used in conjunction with the autopilot to activate LVL mode. This input should be connected to a momentary push-button.	
Takeoff/Go Around	Used in conjunction with the automatic flight control system (AFCS) flight director to activate Takeoff or Go-Around mode. This input should be connected to a momentary push-button located near the pilot's throttle control.	
Left Gear Down/Right Gear Down/Nose Gear Down (1-2)	Used with a switch that activates the input when the aircraft's landing gear is down and locked. When active, a solid green GEAR DOWN indication is displayed on the PFD. If inactive, and the aircraft is at a low engine power setting and a low altitude, a red CHECK GEAR alert message appears and a warning tone sounds continuously. When the aircraft's indicated airspeed is greater than VFE, VLE, or VLO (whichever is lowest) the CHECK GEAR alert message will not appear. For turbine engine applications, the CHECK GEAR alert message will not appear when engine torque is greater than the bottom of the lowest green color band on the torque gauge. If only one of these inputs is connected to a switch, the gear state is dictated by the state of that switch. If more than one of these inputs is wired to a switch a logical AND is applied to the inputs to determine a change in landing gear state. Further, up to two inputs can be assigned to Nose Gear Down.	
Left Gear Up/Right Gear Up/Nose Gear Up (1-2)	Used with a switch that activates the input when the aircraft's landing gear is retracted. This can be used in conjunction with a Gear Down input to indicate additional conditions. If inputs for both Gear Up and Gear Down are configured, and neither input is active, a red GEAR UNSAFE alert message appears. If the Gear Up and Gear Down inputs are both active simultaneously, a yellow GEAR FAULT indication is displayed on the PFD. If only one of these inputs is connected to a switch, the gear state is dictated by the state of that switch. If more than one of these inputs is wired to a switch a logical AND is applied to the inputs to determine a change in landing gear state. Further, up to two inputs can be assigned to Nose Gear Up.	
Nose Gear Up (Amphib) (1-2)/Left Gear Up (Amphib)/ Right Gear Up (Amphib)	Same as the preceding Gear Up configuration, except it also displays a blue GEAR UP message on the PFD when the gear is confirmed up. This is intended for use in amphibious aircraft that desire a positive indication of both gear-up and gear-down states. If only one of these inputs is connected to a switch, the gear state is dictated by the state of that switch. If more than one of these inputs is wired to a switch a logical AND is applied to the inputs to determine a change in landing gear state. Further, up to two inputs can be assigned to Nose Gear Up (Amphib).	
Nose Gear on Ground/ Nose Gear 2 on Ground/ Left Gear on Ground/ Right Gear on Ground/	Used with a weight-on-wheels switch that activates the input when the aircraft is on the ground. If a Stall Switch input is also configured, the Squat Switch input will override it (to reduce nuisance alerting when the stall switch is activated while the aircraft is on the ground). The Squat Switch input is also used as an additional factor for determining airborne/on-ground status. If only one of these inputs is connected to a switch, the gear state is dictated by the state of that switch. If more than 1 of these inputs is wired to a switch a logical AND is applied to the inputs to determine a change in landing gear state. Further, up to 2 inputs can be assigned to Nose Gear On Ground.	

Setting	Description	Supported LRUs
Left Speed Brake/Right Speed Brake	Used with a switch that activates the input when the aircraft's speed brake is fully retracted (closed). A white SPEED BRAKE message will appear on the PFD if the Speed Brake discrete input is not active. If engine power is increased, such as if the speed brake is deployed during takeoff or climb, the SPEED BRAKE message will flash red and a tone will sound. If the aircraft has a maximum airspeed limit for speed brake deployment, it can be configured as a custom reference speed with the label “VSB.” Regardless of engine power setting, if the Speed Brake input is not active and the aircraft's indicated airspeed exceeds VSB, the SPEED BRAKE message will flash red and a tone will sound. If a Logic Signal is selected to be associated with this input using the Alert Mode setting, the state of the selected Logic Signal will be used in place of engine power and airborne state. If Left Speed Brake and Right Speed Brake are both connected to individual airframe switches, the state of both inputs must change, to result in a change in the systems concept of speed brake position state. If only this input is used, the system's concept of speed brake position state is dictated by the state of this input alone.	GSU 73 GEA 24 #1 GEA 24 #2 GEA 110 #1 GEA 110 #2 GAD 27 GDU 116 COM [1] GDU 116 NAV/COM [1]
Left Flap Down Right Flap Down	Can be configured only in installations that do not have a flap position sensor. This can be used as an input to the AOA system to dictate which calibration curve is active. It will also generate a caution-level CAS message when the aircraft exceeds Vfe with the flaps down. If a Logic Signal is selected to be associated with this input using the Alert Mode setting, the state of the selected Logic Signal will be used in place of the default airspeed threshold. If Left Flap Down and Right Flap Down are both connected to individual airframe switches, the state of both inputs must change, to result in a change in the systems concept of flap position state. If only this input is used, the system's concept of flap position state is dictated by the state of this input alone.	
Canopy Closed (1-6)	Used with a switch that activates the input when the aircraft canopy is closed and locked. A solid yellow CANOPY OPEN message will appear on the PFD if the Canopy Closed input is not active. If engine power is increased or the aircraft is airborne, the CANOPY OPEN message will flash red and an alert tone will sound. If a Logic Signal is selected to be associated with this input using the Alert Mode setting, the state of the selected Logic Signal will be used in place of engine power and airborne state. More than discrete input can be assigned to canopy close. A logical AND is applied across the two inputs to dictate the canopy state.	
Door Closed (1-6)	Same as Canopy Closed except alert text is DOOR OPEN. If a Logic Signal is selected to be associated with this input using the Alert Mode setting, the state of the selected Logic Signal will be used in place of engine power and airborne state.	
Rotax Lane A Warning Lamp (Engine 1/2)	Can be used to receive a signal from the Rotax FADEC lane A lamp output. Must be configured as Active High.	
Rotax Lane B Warning Lamp (Engine 1/2)	Can be used to receive a signal from the Rotax FADEC lane B lamp output. Must be configured as Active High.	

[1] J1013 connector only.

Table 5-14 Communications Discrete Inputs

Setting	Description	Supported LRUs
Crew Isolate	Toggles the crew isolation function of a connected GMA 245.	GSU 73 GEA 24 #1 GEA 24 #2 GEA 110 #1 GEA 110 #2 GAD 27 GDU 116 COM [1] GDU 116 NAV/COM [1]
Pilot Isolate	Toggles the pilot isolation function of a connected GMA 245.	
Pilot Opt-In	Remote control of the state of an AXIS internal audio panel Pilot position isolation state.	
Copilot Opt-In	Remote control of the state of an AXIS internal audio panel Copilot position isolation state.	
Passenger Opt-In	Remote control of the state of an AXIS internal audio panel Passenger position isolation state.	
Selected COM Frequency Swap (Ext GMA)	Used with a GMA 245/245R audio panel and a connected COM radio to swap the active and standby frequencies on the currently selected COM. The audio panel's selected microphone channel is used to find which radio receives the frequency swap command.	
Selected COM Frequency Swap	The Selected COM Frequency Swap discrete input is used to flip-flop between the active and standby COM frequencies of the mic selected COM, when audio panel is enabled on an AXIS GDU. A momentary low on this pin will load the standby COM frequency into the active COM frequency field.	
Toggle Selected MON Mode	A momentary low on this pin will toggle the COM standby monitor ON and OFF, of the MIC selected COM, when AXIS internal audio panel is in use.	
COM Playback	Plays the most recent COM recording from an AXIS GDU COM Radio.	GSU 73 GEA 24 #1 GEA 24 #2 GEA 110 #1 GEA 110 #2 GAD 27 GDU 116 COM [3] GDU 116 NAV/COM [3]
COM Mic Swap	Swaps the active COM radio for transmission, when internal Audio Panel is enabled on an AXIS GDU.	
Toggle MON Mode	A momentary low on this pin will toggle the COM standby monitor ON and OFF. In contrast to Toggle Selected MON mode, this only toggles MON for the COM of the unit for which the port is being configured.	GTR 205R(X) GTR 20 GDU 116 COM [2] GDU 116 NAV/COM [2]
COM Frequency Swap	Discrete input activates the frequency swap function of the unit for which the port is being configured. If the discrete input is active for more than two seconds, the emergency frequency will be tuned.	

Setting	Description	Supported LRUs
Pilot Intercom Key	Activates the pilot's microphone for keyed ICS for the unit the port is configured on. When active, the unit bypasses MIC 1 intercom squelch. When configured, the automatic squelch function is disabled on all ICS microphone inputs. When not configured, the automatic squelch function determines Pilot ICS activation.	GTR 205R(X) GDU 116 COM [2] GDU 116 NAV/COM [2]
Copilot Intercom Key	Activates the pilot's microphone for keyed ICS for the unit the port is configured on. When active, the unit bypasses MIC 2 intercom squelch. When configured, the automatic squelch function is disabled on all ICS microphone inputs. When not configured, the automatic squelch function determines Copilot ICS activation.	
Transmit Interlock	This discrete input desensitizes the receiver of the COM radio of the unit for which the port is being configured. In dual COM installations, the discrete input prevents interference from the second radio.	
Pilot Intercom Key	Discrete input activates the pilot ICS function for a GTR 20. Auto squelch and manual squelch are overridden when the Pilot ICS Key is asserted.	GTR 20
Copilot Intercom Key	Activates the copilot keyed ICS function for a GTR 20. Auto squelch and manual squelch are overridden by Copilot ICS Key selection.	
NAV Frequency Swap	Used to flip-flop between the active and standby NAV frequencies of an AXIS NAV/COM Display unit.	GDU 116 COM [2] GDU 116 NAV/COM [2]
Passenger Intercom Key	Activates the passenger's microphone for the ICS when audio panel is enabled on an AXIS flight display unit. When active, the unit bypasses MIC 3/4 intercom squelch. The automatic squelch function is disabled on all ICS microphone inputs. When not configured, the automatic squelch function determines Passenger ICS activation.	
Hold for Lockout	Holding this discrete Low for 2 seconds toggles Lockout mode on the AXIS flight display internal COM radio. Lockout mode tunes 121.5 and selects Mic audio to the internal COM. Optionally, the LOCKOUT push key/toggle can also be connected in parallel to a discrete input on J1013 configured for Selected COM Freq Swap to support dual purpose operation (momentary press to swap frequencies on the mic-selected COM, press/hold to select Lockout mode on the AXIS flight display internal COM).	

[1] J1013 connector only. [2] J1015 only. [3] J1013 and J1015 connectors only.

5.5.3.1 GAP 26 Alert Configuration (-20 Version of GAP 26 Only)

If the discrete output (bare blue wire) from the control box is connected to one of the EIS discrete input pins on the GEA 24, GSU 73, GAD 27, GEA 110, or AXIS display (J1013) the status of the GAP 26 heater can be displayed in one of three ways, depending on user preference:

1. The discrete input configuration shown in figure 5-22 will result in a green “PITOT HEAT” indication that will appear on the PFW any time the GAP 26 heater is powered and the probe temperature is above approximately 25° C (77° F). If Pitot heat is powered off or inoperative, the green “PITOT HEAT” indication will not appear.

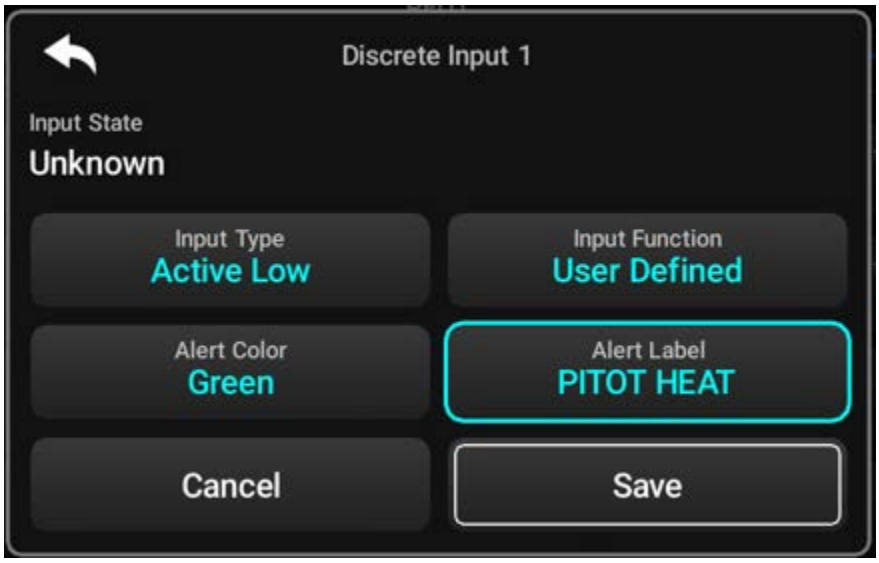

Figure 5-22 Discrete Input 1 Alert Label

2. The discrete input configuration shown in figure 5-23 will result in a yellow “PITOT TEMP” alert that will appear on the PFW any time the GAP 26 heater is powered off, or if it is powered on but the probe temperature is below approximately 25° C (77° F). If Pitot heat is powered and the probe temperature is sufficiently high, the yellow “PITOT TEMP” alert will not appear.

Figure 5-23 Discrete Input 1 Input Type

3. The discrete input configuration shown in figure 5-24 will result in a yellow “PITOT TEMP” alert that will appear on the PFW similar to Configuration #2, with additional logic that automatically prevents the yellow “PITOT TEMP” alert from appearing if the outside air temperature is above approximately 5° C (41° F). This configuration provides the same indication as Configuration #2, but hides the Pitot temperature alert when flying in warmer weather conditions.

Figure 5-24 Discrete Input 1 Input Function

5.5.4 Outputs Tab

5.5.4.1 Discrete Outputs

GDU 116C and GDU 116NC each include discrete outputs on connector J1013. Refer to section A.1.5.4 for more information.

GEA 24, GSU 73 and GEA 110 each have two discrete outputs available. Any discrete output in the system can be configured for the following options:

- Master Warning - The output is pulled low anytime a warning level (red) alert is displayed on the PFD.
- Master Caution - The output is pulled low anytime a caution level (amber) alert is displayed on the PFD.
- Logic Signal - The output is pulled low when the specified Logic Signal is active. See Appendix E for information relating to the configuration of logic signals.

5.5.4.2 Annunciator Lamps

If two EIS LRUs are configured, connect indicator lamps to EIS LRU #1 only. The MW/MC Annunciator Settings accessible from the Outputs tab of the A&P app allows for additional customization of external annunciator behavior.

The Alert Flash setting determines whether unacknowledged warning alerts (flashing red) will cause the Master Warning annunciator output to flash. Selecting Disabled will prevent the Master Warning annunciator from flashing.

The Alert Persist item determines whether the Master Warning annunciator will remain illuminated after a warning alert (red) has been acknowledged. Selecting Disabled will cause the Master Warning annunciator to extinguish when there are no unacknowledged warning (flashing red) alerts.

The Test key can be used to test annunciator lamp wiring.

If “press to reset” behavior is desired for the external annunciator lamps, momentary push-buttons may be used in conjunction with any available discrete inputs to acknowledge on-screen alerts and extinguish one or both annunciator lamps. This capability can be used independently of the above settings. Refer to section 5.5.3 for information about connecting and configuring discrete inputs.

5.5.5 Times & Cycles

The Times & Cycles tab allows the configuration of Flight Time, Total Time, Engine Time and Engine Cycles.

NOTE

Press the Menu key while on this page to Enable Cycle and Time editing. This allows the installer to modify the values on this page, at the time of install, to reflect actual engine time, engine cycles and Total time on the aircraft, at the time of AXIS installation.

Flight Time

Flight Time is the time (in hours) that the aircraft is airborne as determined by GPS data and the indicated airspeed. Touch Flight Time Recording to enable Flight Time.

Total Time

Total Time is the total operating time (in hours) of the aircraft. Touch Total Time Record Mode and configure it per table 5-15.

Table 5-15 Total Time Record Mode Selections

Record Mode Selection	Description
Disabled	Total Time is not recorded.
RPM	Records Total Time when RPM1 value indicates the engine is running.
Oil Pressure	Records Total Time when engine oil pressure is greater than 5 PSI.

Engine Time

Engine time records the total operating time of the engine (in hours) when the engine RPM exceeds the configured Minimum Recording RPM.

Touch Engine Time Record Mode and set it to *Fixed* or *Variable*.

When *Fixed* is selected, the Engine Time will increase by 1 hour if the engine is running for 1 hour at any RPM above the configured Minimum Recording RPM.

When *Variable* is selected, the configured Standard Recording RPM determines the engine speed at which engine time increments at 1 hour per hour. Engine RPMs greater than the Standard Recording RPM value will cause Engine Time to increase faster, and slower RPMs will cause Engine Time to increase slower. The configured Maximum Recording RPM sets an upper limit on the RPM readings used to calculate engine time. This can be used to prevent spurious RPM signals from adversely affecting recorded Engine Time.

For example, if the *Standard Recording RPM* is set to 2300, Engine Time will increase by one hour if the engine is running for one hour at 2300 RPM, and the recorded Engine Time will increment by approximately 0.9 hours if the engine is running for 1 hour at 2100 RPM. This type of Engine Time recording is typical for piston engine applications because it mimics the way a mechanical tachometer records engine time (also called Tach Time).

When set to *Variable*, touch *Minimum Recording RPM* and enter the minimum RPM level that triggers the recording of Engine Time. Touch Standard Recording RPM and enter the aircraft cruise RPM based on the removed tachometer. If the Cruise RPM cannot be determined from markings on the original tachometer, use the POH to find the cruise RPM for 65% horsepower, 6000 ft PA, Standard Temperature, at 21in. Hg (if applicable). Verify the Cruise RPM value type matches the display RPM type (i.e. engine RPM or propeller RPM).

The Maximum Recording RPM item sets an upper limit on the RPM readings used to calculate engine time. This can be used to prevent spurious RPM signals from adversely affecting recorded engine time and should always be set to the redline RPM.

Engine Cycles

When the Engine Time Record Mode is not disabled, the Engine Cycle Count can be enabled. An engine cycle is defined as the following sequence: start the engine, takeoff, land, stop the engine. Multiple takeoffs and landings between one engine start and stop will only accumulate one engine cycle. An aircraft configured for multiple engines will have a cycle count for each engine.

5.5.6 Lean Assist

NOTE

At least one EGT or TIT sensor is required to be configured, to enable Lean Assist.

Lean Assist

Select EGT or TIT. This option dictates which temperature sensor is used as the source for Lean Assist.

Temperature Increase

Select the temperature increase threshold. The default is 15°F.

Temperature Drop

Select the temperature drop threshold. The default is 7.2°F

Fuel Flow Hysteresis

Select the fuel flow hysteresis threshold. The default is 0.2 gal/hr.

5.5.7 Fuel Calculator

Refer to *AXIS Flight Display System Pilot's Guide* for information on operation of the fuel calculator.

Full Fuel

Sets the Full Fuel quantity for the fuel computer. Set according to the fuel tank capacity (set to zero if not used).

Partial Fuel 1/2

The Partial Fuel values may be used if the fuel tanks have "tabs" or some other method of putting in a known quantity of fuel (other than completely full tanks). If the Partial Fuel function is not applicable or not desired, these settings can be left blank or set to zero.

Fill Threshold

This setting is used to find if the fuel quantity should be confirmed upon system start. When power is applied, the system compares the current fuel quantity to the fuel quantity recorded when the system was last shut down. If the current fuel quantity exceeds the previous fuel quantity by more than the fill threshold amount the system will assume that fuel has been added and will pop up a reminder page prompting the pilot to confirm the quantity of fuel on board.

5.5.8 General

The General Tab includes options to support estimated engine percent power, logic signals, custom CAS, and gauge priority.

5.5.8.1 Estimated Engine Power

Estimated engine power can be calculated for Lycoming and Continental engines, using inputs from RPM, manifold pressure, and fuel flow sensors (all three are required for engine power calculation). The General Tab includes the following configuration settings to support estimated engine power:

Engine Type

Select the appropriate Engine type for the aircraft. Options include: Lycoming, Lycoming Turbo, Continental, Continental Turbo, or FADEC.

NOTE

To select an Engine Type, you must first configure a Fuel Flow, RPM and Manifold Pressure Sensor. These are required inputs to the % power calculation.

Max Rated Power

Enter the maximum rated engine power for the aircraft powerplant.

Max Power RPM

Enter the maximum rated RPM at Max rated power for the aircraft powerplant.

BSFC (Brake Specific Fuel Consumption) Constant

Defaulted to 0.39 lb/hr/BHP. Minimum BSFC constant should not be changed from the default value unless an alternate value can be identified in a specific installation's engine operator's manual. Some engine operator's manuals graphically depict minimum BSFC on engine performance curves.

Max Power Manifold Pressure

For a turbocharged engine, enter the manifold pressure for maximum rated power.

NOTE

Configuring maximum manifold pressure is not required for a normally-aspirated engine, as it is assumed to produce maximum power at sea level pressure. The default value is 29.92 in-Hg.

5.5.8.2 Utilities

The General tab also allows the user to open the Logic Signal Editor interface, and specify Gauge priority. These are generally used after all Airframe and Powerplant sensors have been configured in the system.

Logic Signal Editor

The ability to support dynamic gauge range markings and alerts is supported through the use of engine/airframe logic signals, which are used to allow one engine/airframe parameter to affect the behavior of another, or even to affect itself. Reference appendix E for information on how to use this function.

Custom CAS

Using the Logic Signals set up using the guidance of appendix E, custom CAS messages can be created using this page. Touch "Create CAS Message" to create a new CAS alert.

For each new CAS alert, specify the following:

1. Select a name for the alert for tracking purposes.
2. Select "Logic Signal," as created per appendix E.
3. Specify the text of the alert
4. Specify the priority level of the alert, advisory, caution or warning.

Gauge Priority

When all system sensor inputs have been configured per section 5.5.2, each gauge will be organized in the EIS strip per a pre-determined layout. This layout prioritizes gauges as required by most CAAs in operational rules. In the case that there is not enough room on the EIS strip, some gauges are only shown on the dedicated engine page in normal mode.

Touch **Gauge Priority** of the General tab in the A&P app to organize the EIS strip.

Each sensor that was pre-populated on the EIS strip appears in the section titled On Strip, and can be reorganized in any order desired, using the up and down arrows.

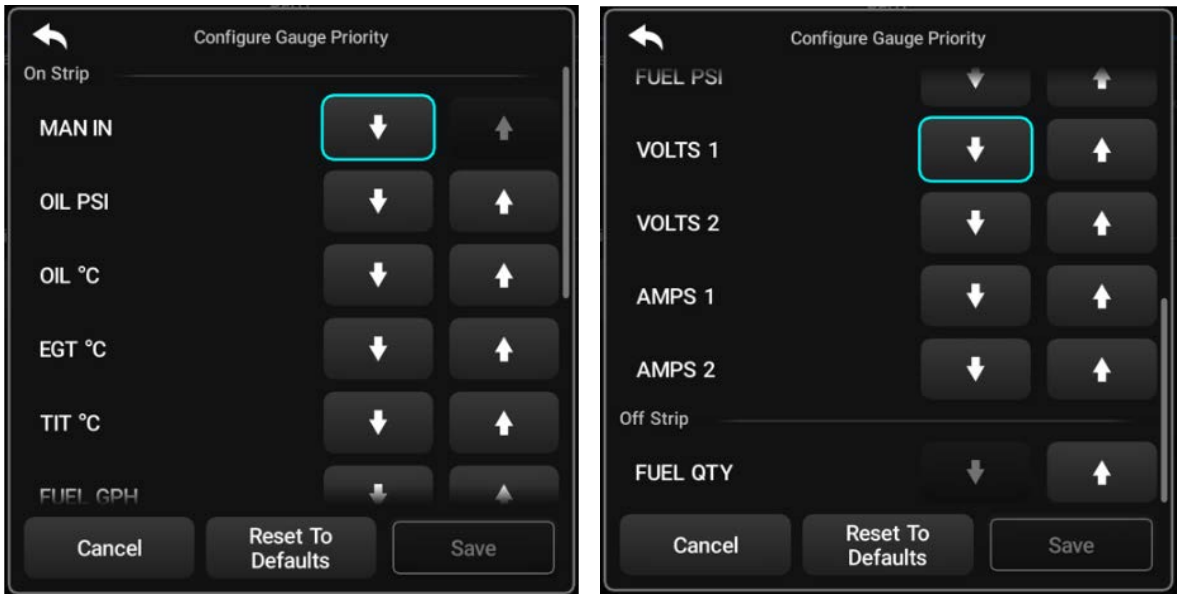

Figure 5-25 Gauge Priority Screen

If enough sensors are configured that results in some sensors only being shown on the dedicated EIS page, those gauges are displayed in the list under a separate header, Off Strip. These sensors can be moved into the On Strip section, using the up arrow. This will simultaneously result in last sensor in the On Strip section, being demoted to the Off Strip section. In the example, touching the up arrow next to FUEL QTY, moves the fuel quantity sensor into the On Strip group, and demotes AMPS 2 to the Off Strip group.

Touch **Save** to save changes. **Reset to Defaults** will reverse any changes made and revert to the pre-determined system layout.

5.6 Autopilot Application

Open the Autopilot application to configure the autopilot. While many configuration settings are adjusted using the information in this section, the majority of autopilot configuration is completed in section 6, post-installation calibrations, and the Autopilot flight test procedure outlined in appendix D.

5.6.1 General

The configuration settings in this menu control fundamental characteristics of the autopilot installation. Review the description of each setting to determine the configuration that best suits your installation.

Control Wheel Steering

The CWS/DISCONNECT discrete input to the GSA 28 servos is connected to a momentary push-button which can function either as a dedicated Autopilot Disconnect (AP DISC) key, or as a combined Autopilot Disconnect/Control Wheel Steering (AP/CWS) key. Regardless of configuration, a short press and release of the AP DISC or AP/CWS key will disengage the autopilot if it is engaged.

If Control Wheel Steering is enabled, pressing and holding the AP/ CWS key places the autopilot into CWS mode. In CWS mode, the servos are temporarily disengaged, allowing hand-flying the aircraft to a new aircraft attitude while continuing to hold the AP/CWS key. When the AP/CWS key is released, the autopilot exits CWS mode and the flight director synchronizes to the current aircraft attitude (if applicable for the current flight director modes).

If Control Wheel Steering is disabled, CWS is not supported and the AP key serves as a dedicated AP DISC key only. The AP DISC key will disconnect the autopilot any time it is pressed, regardless of how long it is held.

Engage AP via CWS

If Control Wheel Steering is enabled, the AP/CWS key can optionally be configured to engage the autopilot when pressed and held.

If “Engage AP Via CWS Input” is enabled, the autopilot will automatically engage when the AP/CWS key is pressed and held.

If “Engage AP Via CWS Input” is disabled, pressing the AP/CWS key while the autopilot is not engaged has no effect. In this state, the autopilot can only be engaged using the GMC Mode Controller AP key or the soft keys on the PFD display.

Autopilot Engage Limits

When engagement limits are enabled, the autopilot may only be engaged within the following ranges:

- Pitch 50° nose up to 50° nose down
- Roll ±75°

If the above pitch or roll limits are exceeded while the autopilot is engaged and while Autopilot Engagement Limits are enabled, the autopilot will disconnect.

Engaging the autopilot outside of its command limits, but within its engagement limits, will cause the autopilot to return the aircraft within command limits.

Flight Control System Monitors

Enables flight control system monitoring against the internal AHRS of a GMC 507 Autopilot controller. This is an additional set of monitors that have the ability to disconnect the autopilot based upon a range of defined flight parameters. If this setting is enabled, the installer will need to enter a value for yaw offset of the GMC 507 LRU, as well as perform a pitch/roll offset calibration.

Annunciator Test

Allows the test of GMC mode annunciation lights.

5.6.2 Flight Director

The Flight Director page allows configuration of certain options for the flight director. This page will only appear in installations that include a Garmin autopilot.

Altitude Controls

Select Normal (default) or Simplified. Selecting Simplified results in a simpler set of behaviors for altitude hold mode. Refer to the *AXIS Flight Display Pilot's Guide* for additional details. Other flight director settings are presented, based on the setting selected for this option, as described below.

ALT Mode User Select Action

This setting is only present when Altitude Controls is set to Normal. Select Normal or Sync Selected Altitude. This setting controls the actions that occur when the user selects altitude hold mode by pressing the ALT key on the GMC Mode Controller, or the ALT key on the display. When set to Sync Selected Altitude, the selected altitude bug will be automatically set to the current aircraft altitude when the user selects altitude hold mode manually by pressing the ALT key on the GMC Mode Controller or the ALT key/soft key on the display. Refer to the *AXIS Flight Display Pilot's Guide* for additional details.

ALT Mode User Up/Down Action

This setting is only present when Altitude Controls is set to Normal. Select Normal or Select VS (vertical speed) Mode. This setting controls the actions that occur when the flight director is in altitude hold (ALT) mode and the user moves the pitch wheel on the GMC Mode Controller, or the up/down keys on the display. When set to Select VS Mode, moving the pitch wheel on the GMC Mode Controller, or the on-screen keys results in a change to VS mode for a climb or descent to a new altitude. Refer to the *AXIS Flight Display Pilot's Guide* for additional details.

Default Climb Vertical Speed

This setting is only present when ALT Mode User Up/Down Action is set to Select VS Mode, or when Altitude Controls is set to Simplified. Enter the desired default vertical speed to set the flight director climb target to.

Default Descent Vertical Speed

This setting is only present when ALT Mode User Up/Down Action is set to Select VS Mode, or when Altitude Controls is set to Simplified. Enter the desired default vertical speed to set the flight director descent target to.

TO/GA Takeoff Pitch and TO/GA Go-Around Pitch

These fields allow customization of the pitch attitude targets that will be commanded when the flight director is in Takeoff (TO) or Go-Around (GA) mode, to suit the performance characteristics of the aircraft. The default value for both settings is 5°.

Maximum Bank Angle

Used to limit the maximum roll attitude commanded by the flight director for aircraft that have unusual attitude limitations. This setting should not be adjusted from the default of 30° except for very high performance aircraft that have bank angle limitations at high speeds.

5.6.3 Roll Servo Tab

Except for Roll Servo Clutch Monitor, the settings found on the Roll Servo Tab are adjusted in the post-installation checkout procedure (section 6.14) and further in the Flight Test Outline (appendix D). Detailed guidance is provided in these sections to adjust each applicable autopilot configuration setting.

Roll Servo Clutch Monitor

The GSA 28 roll servo can monitor itself for a stuck clutch situation. The Clutch Monitor should be enabled for all control arm installations.

If the servo has a large amount of side loading (typically due to a capstan installation), this can occasionally lead to invalid stuck clutch failures. The Clutch Monitor can be disabled for capstan installations with larger side loads to prevent invalid stuck clutch failures.

NOTE

If an invalid stuck clutch failure occurs, the clutch monitor fault can be reset by pressing the RESET soft key on the Roll Servo Tab in configuration mode.

5.6.3.1 Unused Roll Servo Configuration Settings

Some settings available on the Roll Servo Tab are intended to be left at their default value for EAB installations and shall not be modified outside of an internal Garmin autopilot program. No user guidance is provided in this installation manual to modify these settings:

Table 5-16 Roll Tab, Autopilot Configuration Settings

Setting	Default Value
Roll Correction Time (Expert Setting)	1.00
Roll Airspeed Gain Schedule (Expert Setting)	0.000
Roll Altitude Gain Schedule (Expert Setting)	0.000
Roll Fine Adjust Amount	0.00
Roll Fine Adjust Time	0.20

5.6.4 Pitch Servo Tab

Except for Pitch Servo Clutch Monitor, the settings found on the Pitch Servo Tab are adjusted in the post-installation checkout procedure (section 6.14) and further in the Flight Test Outline (appendix D). Detailed guidance is provided in these sections to adjust each applicable autopilot configuration setting.

Pitch Servo Clutch Monitor

The GSA 28 pitch servo can monitor itself for a stuck clutch situation. The Clutch Monitor should be enabled for all control arm installations.

If the servo has a large amount of side loading (typically due to a capstan installation), this can occasionally lead to invalid stuck clutch failures. The Clutch Monitor can be disabled for capstan installations with larger side loads to prevent invalid stuck clutch failures.

NOTE

If an invalid stuck clutch failure occurs, the clutch monitor fault can be reset by pressing the RESET soft key on the Roll Servo Tab in configuration mode.

5.6.4.1 Unused Pitch Servo Configuration Settings

Some settings available on the Pitch Servo Tab are intended to be left at their default value for EAB installations and shall not be modified outside of an internal Garmin autopilot program. No user guidance is provided in this installation manual to modify these settings:

Table 5-17 Pitch Tab, Autopilot Configuration Settings

Setting	Default Value
Pitch Airspeed Gain Schedule (Expert Setting)	0.000
Pitch Altitude Gain Schedule (Expert Setting)	0.000
Vertical Speed Inertial Gain (Expert Setting)	0.00
Pitch Servo Control Mode (Expert Setting)	Normal
Pitch Correction Time (Expert Setting)	1.00
Pitch Fine Adjust Amount	1.00
Pitch Fine Adjust Time	0.20

5.6.5 Yaw Servo Tab

Except for Yaw Servo Clutch Monitor, the settings found on the Yaw Servo Tab are adjusted in the post-installation checkout procedure (section 6.14) and further in the Flight Test Outline (appendix D). Detailed guidance is provided in these sections to adjust each applicable autopilot configuration setting.

Yaw Servo Clutch Monitor

The GSA 28 yaw servo can monitor itself for a stuck clutch situation. The Clutch Monitor should be enabled for all control arm installations.

If the servo has a large amount of side loading (typically due to a capstan installation), this can occasionally lead to invalid stuck clutch failures. The Clutch Monitor can be disabled for capstan installations with larger side loads to prevent invalid stuck clutch failures.

NOTE

If an invalid stuck clutch failure occurs, the clutch monitor fault can be reset by pressing the RESET soft key on the yaw Servo Tab in configuration mode

5.6.5.1 Unused Yaw Servo Configuration Settings

Some settings available on the Yaw Servo Tab are intended to be left at their default value for EAB installations and shall not be modified outside of an internal Garmin autopilot program. No user guidance is provided in this installation manual to modify these settings:

Table 5-18 Yaw Damper Autopilot Configuration Settings

Setting	Default Value
Yaw Airspeed Gain Schedule (Expert Setting)	0.000
Yaw Altitude Gain Schedule (Expert Setting)	0.000
Yaw Rate Filter Constant	0.08
Yaw Accel Filter Constant	0.16

5.6.6 Trim

NOTE

Ensure basic autopilot functionality is properly adjusted per appendix D before enabling trim control for any servo for flight.

NOTE

Available trim configuration items can change depending on whether trim control is enabled for a DC motor or GSA 28 assigned as a trim motor, and whether the electrical control system LRU is enabled.

Fastest Trim Movement Airspeed

Select the lower airspeed threshold for speed scheduled trim. Trim is intended to move faster at slower airspeed. This airspeed will correlate to the Trim axis Fastest speed setting. This will apply to all three axes of trim, if equipped.

Slowest Trim Movement Airspeed

Select the upper airspeed threshold for speed scheduled trim. Trim is intended to move slower at higher airspeed. This airspeed will correlate to the Trim axis Slowest speed setting. This will apply to all three axes of trim, if equipped.

NOTE

Trim Motor movement speed is scaled linearly between the Slowest Trim Movement Airspeed and Fastest Trim Movement Airspeed. The Trim Fastest Speed and Trim Slowest Speed specified for each axis, determines the range of trim motor movement speeds bounded by the Airspeed Thresholds.

Trim Airspeed Source

Speed scheduled trim can be configured to reference either True Airspeed or Indicated airspeed.

5.6.7 Roll Trim Tab

The Roll Trim tab includes a variety of configuration options that are used to finely tune how the GFC 500X drives trim when installed with a roll trim motor.

Unless noted below, detailed guidance is provided in the post-installation checkout procedure (section 6.14) and further in the Flight Test Outline (appendix D) to adjust each applicable trim configuration setting.

Configure each setting, as applicable:

Roll Trim Motor Control

The Roll Trim Motor Control should be disabled until the installed is queued to enable in section 6 and appendix D. While this setting is disabled, manual electric trim bypasses the GSA 28, and continues to work normally.

Roll Trim Motor Voltage

The GSA 28 servo can drive DC trim motors at either 12V or 24V. Select the appropriate trim motor voltage for the installation.

Roll Trim Max Run Time

The GSA 28 servos can limit the maximum continuous run time of the trim motor to help prevent the potential for a trim runaway situation. The Roll Trim Max Run Time setting is the maximum amount of time the trim motor will run continuously when a manual electric trim input is detected. If the maximum time is exceeded, the pilot must release the Manual Electric Trim (MET) control and then reassert it to continue running trim. If the maximum trim motor run time is set to "No Limit," the electric trim motor will run indefinitely as long as the manual trim input switch is held. This item has no effect on auto trim.

Roll Trim Fastest Speed

Use this to limit the fastest speed at which the trim motor will move. This trim motor movement speed corresponds to the airspeed defined using the Fastest Trim Movement Airspeed, in Trim trim tab within the autopilot application.

Roll Trim Slowest Speed

Use this to limit the slowest speed at which the trim motor will move. This movement speed corresponds to the airspeed defined using the Slowest Trim Movement Airspeed, in the Trim tab within the autopilot application.

Roll Trim Servo Clutch Monitor

A GSA 28 roll trim servo can monitor itself for a stuck clutch situation. The Clutch Monitor should be enabled for all control arm installations.

If the servo has a large amount of side loading (typically due to a capstan installation), this can occasionally lead to invalid stuck clutch failures. The Clutch Monitor can be disabled for capstan installations with larger side loads to prevent invalid stuck clutch failures.

NOTE

If an invalid stuck clutch failure occurs, the clutch monitor fault can be reset by pressing the RESET soft key on the Roll Trim Servo Tab in configuration mode.

Roll Trim Switch Direction

If a GAD 27 is installed and used for trim switch mixing, this setting changes the interpretation of GAD 27 switch inputs.

5.6.7.1 Unused Roll Trim Servo Configuration Settings

Some settings available on the Roll Trim Tab are intended to be left at their default value for EAB installations and shall not be modified outside of an internal Garmin autopilot program. No user guidance is provided in this installation manual to modify these settings:

Table 5-19 Roll Trim Configuration Settings

Setting	Default Value
Roll Auto Trim Speed (Expert Setting)	0%
Roll Auto Trim Minimum Speed (Expert Setting)	5%
Roll Auto Trim Delay Time (Expert Setting)	5s
Roll Auto Trim Fade Time (Expert Setting)	5s
Roll Auto Trim Torque Threshold (Expert Setting)	1.0
Roll Auto Trim Torque Deadband (Expert Setting)	50%

5.6.8 Pitch Trim Tab

The Pitch Trim tab includes a variety of configuration options that are used to finely tune how the GFC 500X drives trim when installed with a pitch trim motor.

Unless noted below, detailed guidance is provided in the post-installation checkout procedure (section 6.14) and further in the Flight Test Outline (appendix D) to adjust each applicable trim configuration setting.

Configure each setting, as applicable:

Pitch Trim Motor Control

The Pitch Trim Motor Control should be disabled until the installed is queued to enable in section 6 and appendix D. While this setting is disabled, manual electric trim bypasses the GSA 28, and continues to work normally.

Pitch Trim Motor Voltage

The GSA 28 servo can drive DC trim motors at either 12V or 24V. Select the appropriate trim motor voltage for the installation.

Pitch Trim Max Run Time

The GSA 28 servos can limit the maximum continuous run time of the trim motor to help prevent the potential for a trim runaway situation. The Pitch Trim Max Run Time setting is the maximum amount of time the trim motor will run continuously when a manual electric trim input is detected. If the maximum time is exceeded, the pilot must release the Manual Electric Trim (MET) control and then reassert it to continue running trim. If the maximum trim motor run time is set to “No Limit,” the electric trim motor will run indefinitely as long as the manual trim input switch is held. This item has no effect on auto trim.

Pitch Trim Fastest Speed

Use this to limit the fastest speed at which the trim motor will move. This trim motor movement speed corresponds to the airspeed defined using the Fastest Trim Movement Airspeed, in Trim trim tab within the autopilot application.

Pitch Trim Slowest Speed

Use this to limit the slowest speed at which the trim motor will move. This movement speed corresponds to the airspeed defined using the Slowest Trim Movement Airspeed, in the Trim tab within the autopilot application.

Pitch Trim Servo Clutch Monitor

A GSA 28 pitch trim servo can monitor itself for a stuck clutch situation. The Clutch Monitor should be enabled for all control arm installations.

If the servo has a large amount of side loading (typically due to a capstan installation), this can occasionally lead to invalid stuck clutch failures. The Clutch Monitor can be disabled for capstan installations with larger side loads to prevent invalid stuck clutch failures.

Note: If an invalid stuck clutch failure occurs, the clutch monitor fault can be reset by pressing the RESET soft key on the Pitch Trim Servo Tab in configuration mode.

Pitch Trim Switch Direction

If a GAD 27 is installed and used for trim switch mixing, this setting changes the interpretation of GAD 27 switch inputs.

5.6.8.1 Unused Pitch Trim Servo Configuration Settings

Some settings available on the Pitch Trim Tab are intended to be left at their default value for EAB installations and shall not be modified outside of an internal Garmin autopilot program. No user guidance is provided in this installation manual to modify these settings:

Table 5-20 Pitch Trim Configuration Settings

Setting	Default Value
Auto Trim Delay Time (Expert Setting)	5s
Pitch Auto Trim Fade Time (Expert Setting)	5s
Pitch Auto Trim Torque Threshold (Expert Setting)	1.0
Pitch Auto Trim Torque Deadband (Expert Setting)	50%
Pitch Auto Trim Speed Offset (Expert Setting)	0%
Pitch Auto Trim Minimum Speed (Expert Setting)	5%

5.6.9 Yaw Trim Tab

Unless noted below, detailed guidance is provided in the post-installation checkout procedure (section 6.14) and further in the Flight Test Outline (appendix D) to adjust each applicable trim configuration setting. Configure each setting, as applicable:

Yaw Trim Motor Control

The Yaw Trim Motor Control should be disabled until the installed is queued to enable in section 6.14 and appendix D. While this setting is disabled, manual electric trim bypasses the GSA 28, and continues to work normally.

Yaw Trim Motor Voltage

The GSA 28 servo can drive DC trim motors at either 12V or 24V. Select the appropriate trim motor voltage for the installation.

Yaw Trim Max Run Time

The GSA 28 servos can limit the maximum continuous run time of the trim motor to help prevent the potential for a trim runaway situation. The Yaw Trim Max Run Time setting is the maximum amount of time the trim motor will run continuously when a manual electric trim input is detected. If the maximum time is exceeded, the pilot must release the Manual Electric Trim (MET) control and then reassert it to continue running trim. If the maximum trim motor run time is set to “No Limit,” the electric trim motor will run indefinitely as long as the manual trim input switch is held. This item has no effect on auto trim.

Yaw Trim Fastest Speed

Use this to limit the fastest speed at which the trim motor will move. This trim motor movement speed corresponds to the airspeed defined using the Fastest Trim Movement Airspeed, in Trim trim tab within the autopilot application.

Yaw Trim Slowest Speed

Use this to limit the slowest speed at which the trim motor will move. This movement speed corresponds to the airspeed defined using the Slowest Trim Movement Airspeed, in the Trim tab within the autopilot application.

Yaw Trim Servo Clutch Monitor

A GSA 28 yaw trim servo can monitor itself for a stuck clutch situation. The Clutch Monitor should be enabled for all control arm installations.

If the servo has a large amount of side loading (typically due to a capstan installation), this can occasionally lead to invalid stuck clutch failures. The Clutch Monitor can be disabled for capstan installations with larger side loads to prevent invalid stuck clutch failures.

NOTE

If an invalid stuck clutch failure occurs, the clutch monitor fault can be reset by pressing the RESET soft key on the Yaw Trim Servo Tab in configuration mode.

Yaw Trim Switch Direction

If a GAD 27 is installed and used for trim switch mixing, this setting changes the interpretation of GAD 27 switch inputs.

5.6.9.1 Unused Yaw Trim Servo Configuration Settings

Some settings available on the Yaw Trim Tab are intended to be left at their default value for EAB installations and must not be modified outside of an internal Garmin autopilot program. No user guidance is provided in this installation manual to modify these settings:

Table 5-21 Yaw Trim Configuration Settings

Setting	Default Value
Yaw Auto Trim Delay Time (Expert Setting)	5s
Yaw Auto Trim Fade Time (Expert Setting)	5s
Yaw Auto Trim Torque Threshold (Expert Setting)	1.0
Yaw Auto Trim Torque Deadband (Expert Setting)	50%
Yaw Auto Trim Speed Offset (Expert Setting)	0%
Yaw Auto Trim Minimum Speed (Expert Setting)	5%

5.6.10 ESP

WARNING

ESP is disabled by default. It is very important to review the details of ESP operation in AXIS Flight Display Pilot's Guide (190-03123-21), and thoroughly interrogate the options below, before enabling ESP on any aircraft axis.

This page allows configuration of certain options for the ESP (Electronic Stability and Protection) function. It will only appear in installations that include an autopilot with Garmin servos. ESP is an optionally enabled feature that is intended to assist the pilot in maintaining the aircraft in a stable flight condition. This feature will only function when the aircraft is above 200 feet AGL and the autopilot is not engaged.

ESP engages when the aircraft exceeds one or more conditions (pitch, roll, airspeed) beyond the normal flight parameters. Enhanced stability for each condition provides a force to the appropriate control surface to return the aircraft to the normal flight envelope. This is perceived by the pilot as resistance to control movement in the undesired direction when the aircraft approaches a steep attitude or high airspeed. As the aircraft deviates further from the normal attitude and/or airspeed, the force increases (up to an established maximum) to encourage control movement in the direction necessary to return to the normal attitude and/or airspeed range.

The following configuration settings dictate the behavior of ESP. Some settings may not appear in every system, depending on equipage:

Roll Attitude Limiting

Select Enabled or Disabled (all other fields are unavailable when Disabled). If Roll Attitude Limiting is enabled, enter desired bank Limit of aircraft (range 45°to 60° right and left), this limit will appear as Guardrails on the PFW.

Pitch Attitude Limiting

Select Enabled or Disabled. Enter desired Pitch Limit of aircraft. If Roll Attitude Limiting is enabled, enter desired Pitch Attitude Up Limit, and Pitch Attitude Down Limit. Allowable range of -10° to -25° for Down Limit, and +10° to +25° for Up Limit (default settings are -15° and +20° respectively).

Airspeed Limiting

The minimum airspeed setting should be set to a value lower than the minimum airspeed that is anticipated during approach while above 200 ft AGL.

The maximum airspeed setting should be set to a value

Mach Limiting

Select Enabled or Disabled. Enter desired Mach Limit of aircraft. This field does not appear unless an Mmo (maximum operating Mach) value is entered on the Reference Speeds Setting tab, in the Settings Application. Allowable range of settings are from 0.10 minimum to 1.0 maximum (default setting is 0.5).

Default ESP Power-up State

Select Enabled or Disabled. This setting determines whether the ESP is functioning upon power up. If disabled, ESP can still be enabled by the pilot in normal operating mode.

NOTE

ESP can also be inhibited with an optional external toggle switch connected to a discrete input. Refer to table 5-12 for ESP Inhibit setting information.

Auto Engage LVL Mode

Select Enabled or Disabled. When enabled, the autopilot will engage with the flight director in Level Mode to bring the aircraft into level flight if ESP has been engaged for more than 10 seconds of a 20 second time period.

5.7 CAL

Touch the **CAL** app to calibrate and test the ADAHRS and magnetometer, and to configure the cockpit lighting and AXIS display backlight.

5.7.1 ADAHRS

The ADAHRS Calibration & Test tab is used to perform post-installation configuration and calibration for any GSU in the aircraft (GSU 25, GSU 73, or GSU 75), in addition to the GMC 507, since these units include internal AHRS that also require similar calibration.

5.7.1.1 ADAHRS 1/2/3

Unit Orientation

Specify the Unit Orientation for each GSU in the system as follows:

- GSU 25

  Refer to figure 4-26 for diagrams of what the following orientations look like for the GSU 25:

  - Tubes Aft: Connectors Down, Port, Starboard, or Up
  - Tubes Down: Connectors Aft, Forward, Port, or Starboard
  - Tubes Forward: Connectors Down, Port, Starboard, or Up
  - Tubes Port: Connectors Aft, Down, Forward, or Up
  - Tubes Starboard: Connectors Aft, Down, Forward, or Up
  - Tubes Up: Connectors Aft, Forward, Port, or Starboard
- GSU 73
  - Connectors Aft, Forward, Port, or Starboard
- GSU 75
  - Connectors Aft, Forward, Port, or Starboard

5.7.1.2 Primary Mode Controller

Yaw Offset

Enter a value for yaw offset (degrees) only when a GMC 507 is installed in a panel that is not perpendicular to the aircraft forward motion (canted panel). Otherwise, no entry is required.

5.7.1.3 Calibration and Test

GSU Pitch/Roll Offset Calibration

The GSU Pitch/Roll Offset Calibration is required to establish a baseline truth reference for 'level' after the ADAHRS unit has been installed in the aircraft, to account for small deviations in alignment. The GSU Pitch/Roll Offset Calibration is capable of performing the calibration on multiple ADAHRS units, simultaneously. Refer to section 6.3 for instructions to complete this calibration.

NOTE

It is important to calibrate all ADAHRS units in the aircraft at the same time, without moving the aircraft. If any ADAHRS in the aircraft is re-calibrated, re-calibrate all ADAHRS sources, in order to establish the same baseline concept of level for all ADAHRS units. Failure to do so may result in miscompare condition between common sensor values.

GMC Pitch/Roll Offset Calibration

If a GMC 507 autopilot controller is installed in the aircraft, this procedure must be completed as part of the post-installation calibration procedure. The internal AHRS of the GMC 507 is calibrated, similar to the GSU Pitch/Roll Offset Calibration. Refer to section 6.4.

Engine Vibration Test

The Engine Vibration Test is required for all installations to validate the vibration characteristics of the installation. Refer to section 6.5.

Static Pressure Calibration

The Static Pressure Calibration procedure establishes a new calibration for the static sensor on a GSU 25 or GSU 73, which directly affects altitude accuracy. This procedure is only required after a failed periodic altimeter test. Refer to section J.3.4.1.

Zero Airspeed Calibration

The Zero Airspeed Calibration procedure is used to compensate for the noise present in a GSU 25 airspeed sensor while stationary. The airspeed pressure sensor used in a GSU 25 has very low drift and does not typically require recalibration. Refer to section J.3.4.2.

5.7.2 Magnetometer

The Magnetometer tab displays an overview of each configured GMU, including unit status, attitude data status, GPS data status, and calibration status, as well as unit orientation for a GMU 11.

Orientation

Set the orientation for an installed GMU 11 to match the installation. Options are Connectors Aft, Forward, Port, or Starboard. Refer to figure 4-36.

Magnetometer Interference Test

The Magnetometer Interference Test is used to find a suitable installation location for the GMU. Refer to section 6.6.

Calibration

The Magnetometer Calibration compensates for the aircraft's magnetic field at the GMU installation location to ensure accurate magnetic heading output. Refer to section 6.7.

5.7.3 Cockpit Lighting

NOTE

A GAD 27 must exist in the system in order to display the Cockpit Lighting settings tab. Use the Devices Application to add GAD 27 to the system to access this configuration menu.

The cockpit lighting settings page allows the installer to select one of three controlling inputs to command the output for each of three DC analog outputs and three AC (PWM, pulse width modulation) outputs, of a connected GAD 27. If a lighting bus output is not in use, leave the associated control setting, set to **Bus Off**.

Each input can be assigned to more than one output. This allows the installer to specify unique custom calibrations for each selected lighting bus output, and drive them from a single common input source.

Figure 5-26 Cockpit Lighting Page

When an input is specified for a given lighting bus output, the Calibration option is selectable. Touch Calibration to open the calibration table for each lighting bus output.

The Calibration page allows the user to enter calibration points to define the lighting bus output response, across the voltage range of the input source. Each calibration point is defined by an input voltage level, and an associated output level. A simple two point calibration will scale the lighting bus output linearly from the two specified calibration points.

Figure 5-27 DC Output 1 Page

Additional calibration points can be entered, which can be used to define a non-linear lighting bus output level, across the voltage range of the input source. Touch **Add Calibration Point**, to add calibration points.

The graph displayed on each calibration page provides a visual depiction of the lighting bus calibration as defined by the user. The line is displayed in green for a valid calibration. Any segments in yellow, represent a segment of the calibration curve that results in a reversal of the lighting bus output level, and should be corrected by the installer.

Figure 5-28 DC Output 1 Calibrated Page

5.7.4 Display Lighting

Configure the AXIS flight display backlight.

Active Lighting Control

Sets which source is actively controlling the brightness. Options are *Lighting Bus, Photocell,* and *Manual*.

Default Lighting Control

Sets the sets the lighting source that the display will default to when powered up in Normal mode.

Display Brightness

Shows the current display brightness percentage. Sets the Active Lighting Control to Manual automatically when adjusted.

Key Brightness Offset

Sets the brightness of the bezel keys relative to the display brightness. Can be set between -100% (always off) and +100% (always on).

5.7.4.1 Photocell Backlight Brightness Control

Configure the AXIS flight display lighting as follows when Photocell is selected as the Lighting Control.

Display Min Brightness

Sets the minimum display brightness percentage.

Display Max Brightness

Sets the maximum display brightness percentage.

Time Constant

Sets the response time for the display to adjust to changes in lighting conditions. Set to a low level (e.g., 2.00 SEC) to adjust the brightness faster.

5.7.4.2 Configure Lighting Bus

Configure the AXIS flight display lighting as follows when Lighting Bus is selected as the Lighting Control.

NOTE

The AXIS display has two input pins that can be connected to a lighting bus control, refer to appendix A for more information.

1. Touch **Enable Lighting Bus** to configure a lighting bus input.
2. Touch **Lighting Bus Pin** to specify which pin on the display is connected to the lighting bus control, either pin 43 or 26.
3. Touch **Time Constant** to specify how quickly the display backlight reacts to a change in lighting bus voltage. A small value for this field will result in rapid adjustments to display backlight, in response to a given change in the lighting bus input voltage level.
4. Select a **Brightness** value for the 0.0v Minimum Input calibration point. This is the the display brightness level which will result from a bus input voltage level of 0.0v.
5. Select a Maximum voltage input value (**Max Input**). This represents the maximum voltage expected for the lighting bus input. The options are 5v, 15v and 28v.
6. Select a **Brightness** value to correspond to the Max Input calibration point. The selected value will dictate display backlight level, when the lighting bus input is equal to the configured Max Input voltage level.
7. Optionally select **Add Calibration Point**, and specify a voltage level and display brightness level, to insert an intermediate calibration point. This allows the installer to specify a non-linear display backlight response to changes in lighting bus input voltage.
8. Select a value for **Use Photocell Below**. When bus voltage drops below the specified voltage level, the display will revert to using the ambient light photocell sensor. This protects against a wiring fault. If the lighting bus input to the display were to experience a fault resulting in at or near 0v, the display backlight will not be driven to its lowest lighting level, but will revert to the photocell and automatically adjust to ambient lighting conditions. If the value is set to 0 V, the value will be ignored and the display brightness will remain at the Lighting Bus Min level for any input level between 0 V and the Min Brightness level (not recommended).
9. Select **Photocell Reversion Hysteresis** to specify a hysteresis value for the photocell reversion function.
10. Select a value for Button Outline. A selection of “On” turns high contrast display mode on. Auto references the Lower Threshold and Upper Threshold values set in the same section, to automatically transition display to high contrast mode.

5.8 Diagnostics

5.8.1 HSDB

The HSDB interface diagnostics page includes information relating to the HSDB status of each device capable of being interfaced to the system, via HSDB. This includes AXIS Flight Display Units. The HSDB Diagnostics page can be accessed from every display in the system, to assist in troubleshooting of a potential communication error.

For each unit on the HSDB network, the following information is provided:

- Unit Type
- Port 1 Status
- Port 2 Status (if applicable)
- Port 3 Status (if applicable)
- Port 4 Status (if applicable)

Unit type will display the unit product name for LRUs added to the system using the Devices application. An indication of the status of the LRU is provided on the same line, and can reflect either *Online* or *Offline*.

For each port status, *Receiving Data* will be displayed if the unit reports that data is being transferred on that port. It will also display the unit connected to that port. If no data is being transferred on that port, Not Receiving data will be displayed.

5.8.2 CAN

The CAN Interface diagnostics page includes detailed information relating to the CAN (Common Area Network) status of each device on the data bus.

The following information is displayed for each LRU:

- Network Error Rate
- Network TX Warning
- Network RX Warning
- Network Error Passive
- Network Bus Off

The error counts displayed on this page are indicative of the communication health of each device on the bus. The Network error rate as shown in the Devices Application is an overall indication of bus health. 0% represent healthy bus communication, 100% represents serious communication errors. The information on the diagnostics page, provides a higher level of granularity into the bus errors that each LRU is reporting, in real time. This information can help provide real time feedback when troubleshooting CAN errors, as to when a problem starts, or stops, in response to a given troubleshooting action.

Network Error Passive, Network TX and RX warning should ideally reflect 0-5. It is not uncommon for these number to increment if another CAN LRU is turned on or off during operation. In cases of serious bus communication issues, the numbers for these fields will increment rapidly. Network Bus Off should always reflect a value of 0.

Refer to section J.3.2.1 for information on troubleshooting. Garmin Aviation Support can assist if troubleshooting does not solve the issue.

5.8.3 RS-232

The RS-232 interface diagnostics page includes information relating to the assigned formats for each RS-232 serial port, on each display. This information can be accessed from each display in the system.

NOTE

Port assignments cannot be made directly from this page. Port assignments are made when associating a unit with a specific port during the Add Device process. Refer to the associated Device Modification page to make any desired changes.

When a specific display is selected, each port on the display is shown, including the format associated with each unit, and if applicable, an associated unit and baud rate or Input Status. Ports that aren't configured display dashes.

When a specific unit is selected, each port on the display is shown, including the format associated with each unit, and if applicable, an associated unit and baud rate.

Touch **Data Feed** to view the data feed for the associated serial port.

5.8.4 RS-485

The RS-485 tab is only displayed if a AXIS COM or NAV/COM display exists in the system device list. The RS-485 tab includes information relating to the assigned formats for each RS-485 port on each AXIS flight display in the system.

NOTE

Port assignments cannot be made directly from this page. Port assignments are made when configuring LRUs on the Device Application page (refer to section 5.3). Refer to the associated modify device page to make any desired changes.

Select each configured AXIS flight display (PFD 1, PFD 2, MFD 1, or MFD 2) to view information about the ports on that unit. For each configured port, the format, associated unit (if applicable), and baud rate (if applicable) or input status for that port are shown. Ports that aren't configured display dashes.

5.8.5 ARINC 429

The ARINC 429 interface diagnostics page includes information relating to the assigned formats for each ARINC 429 port, on each display (COM or NAV/COM Displays only), GAD 29, or GSU 73 in the system.

NOTE

Port assignments cannot be made directly from this page. Port assignments are made when associating a unit with a specific port during the Add Device process. Refer to the associated Device Modification page to make any desired changes.

From the top-level menu, each display or ARINC 429 interface unit in the system can be selected, to view further information about the ports on that unit.

When a specific unit is selected, each port on the AXIS ARINC 429 Interface is shown. For each of those ports, the following information is provided:

- Format associated with the port
- The associated interfacing LRU that the port is connected to
- Input status
- Associated SDI for that port

Ports that aren't configured display dashes.

5.9 Miscellaneous

The Miscellaneous Application can be used to export system logs, import and export configuration files, and manage wireless connections.

5.9.1 Logs

Open the Logs tab to view all logs available for export to a USB-C stick, or wireless via Garmin Pilot. These include the following:

- Flight data logs
- Diagnostics logs

5.9.1.1 Flight Data Logs

The flight data log page displays two data fields, which provide information relating to Flight Data Log exporting.

An indication is provided for the number of logs that are considered to be “unexported” in the system. The system considers a Flight Data Log “unexported” if it has not been exported via USB-C or wirelessly to Garmin Pilot.

The Status indication displays “Active” while Flight Data Logs are actively being transferred to the USB-C drive. In the absence of that process occurring, the status field displays “Idle”.

NOTE

Flight Data Logs are generated individually by each display in the system, and can be exported individually from any of them. In the case there is an issue with a log for a particular flight, it is possible another display in the system is able to normally export a functional version of the same flight.

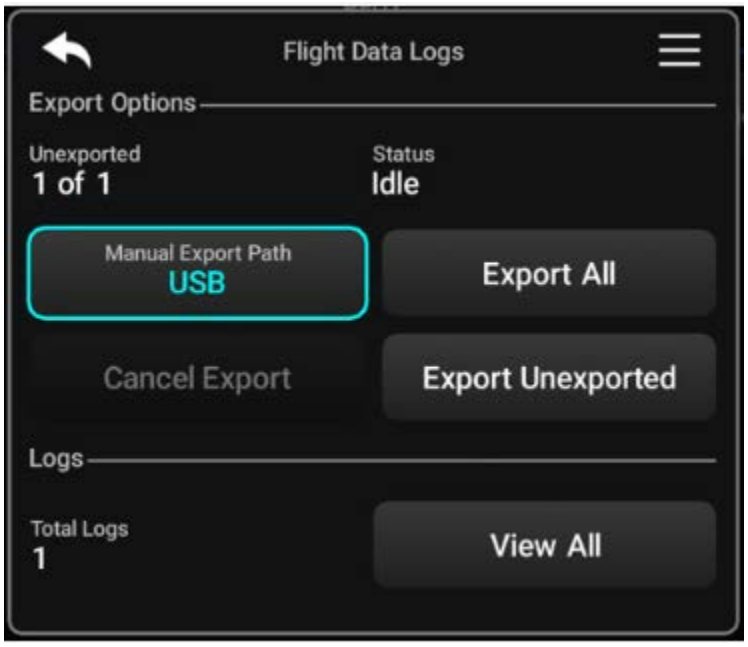

Figure 5-29 Flight Data Logs Page

Manual Export Path

Select **USB**.

Export All

This option exports all logs stored in the display.

Cancel Export

This option allows the user to cancel a current export cycle.

Export Unexported

This option allows the user to export all Flight Data Logs which have not already been exported, to help reduce duplication of a user's log record.

5.9.1.1.1 View All

The AXIS system can record and save Flight Data Logs to internal memory. The View All page provides the ability to view each individual log stored in the system. This page also allows the user to filter stored logs, using several different criteria. More than one filter can be applied at a time. Individual logs are listed below the filter settings in this page. Each individual log can be exported by touching the log and using the user specified path for export. The following options allow the user to sort through the logs saved in the display, and select specific logs for export.

5.9.1.1.1.1 Log Filters

The following options are available to filter the list of stored Flight Data Logs. Touch the desired option (Airport, Size, Status, Date Range) to enable or disable the specific filter group. Once enabled, touch the associated Filter option, to specify the criteria for the filter group. The available criteria for each option are as follows:

Airport

Use the keyboard to enter a desired airport identifier.

Size

- **B** - byte
- **KB** - kilobyte
- **MB** - megabyte
- **GB** - gigabyte

Status

- **Unexported** - Has not yet been exported
- **Queued** - Currently queued to be exported
- **Exporting** - In the process of being exported
- **Exported** - Has already been exported by the system
- **Partial Export** - Has been partially exported by the system
- **Canceled** - A previous export was canceled
- **Failed** - A previous export failed to complete
- **Unknown** - The export status is unknown

Date Range

Specify a date range using the **Date** fields under the From and To headers.

5.9.1.1.1.2 Individual Log Export

When an individual log is selected from the View All page, an indication is provided for the name of the log (composed of date and time of the beginning of the log), the airport of origin, and the size of the selected log. The following options allow the user to view relevant details and export the selected log:

Manual Export Path

Select **USB**.

Export

This option allows the user to export the currently selected log, using the export path specified by the Manual export path option.

Export Information

This page provides details relating to the name of the log, the date of the last export, the time of the last export and the export path used to complete the export.

View Log Details

Provides additional information about the selected Flight Data Log.

5.9.1.2 Diagnostic Logs

The Diagnostics Logs page allows the user to download system diagnostics logs to USB-C. This is not a common maintenance item, and the user should only complete this procedure when requested by Garmin Aviation Product Support.

The organization of this page includes 4 different tabs, System, Displays, GEA and GSU. GEA is only present when one or more GEA 110's exists in a system. GSU is only present when one or more GSU 75's exist in a system.

The Summary section at the bottom of the page provides a status of the current diagnostic log export cycle.

NOTE

While the options below allow for the export of individual log, or groups of logs, it is generally best practice to simply use the Export All function. This provides Garmin Aviation Product Support with the most diagnostic information, and may help reduce turn around for assistance with an issue.

Check All

This function selects all options on the currently selected tab.

Clear All

This function clears all options on the currently selected tab.

Manual Export Path

Select **USB**.

Export

Pressing this key initiates an export, of the selected items on all tabs, using the export path selected using the Manual Export Path setting.

Export All

Touching this key initiates an export, of all available items, across all available tabs.

NOTE

*Press **MENU** while on the Diagnostic Logs page to delete all logs from the system. "Delete Local Garmin Data" will delete all logs off of the GDU being used to view this page. "Delete All CMC Data" will command all displays in the system to delete all logs*

5.9.2 Video

Source Available

Enable the source to configure the following settings.

Source Name

Touch Source Name and enter a name or leave as the default.

Orientation

Sets the orientation of the video. The video can be rotated in 90° increments and/or mirrored.

Layout Scheme

Sets the dimensions of the video. Options are None, Fit, Fill, Match Height, and Match Width.

Cropping

Allows the video to be cropped in each direction.

Pilot Selectable Adjustments

When enabled, allows the brightness, contrast, and saturation to be adjusted in Normal mode.

Brightness, Contrast, Saturation

Allows each setting to be adjusted manually.

5.9.3 Config

The Config tab provides options to export and import system configuration and calibration.

CAUTION

It is highly advised to write a configuration file and configuration summary after initial system configuration, and subsequent to each future change to system configuration.

NOTE

A USB-C drive must be present in PFD1 to initiate a configuration file export or import.

5.9.3.1 Configuration File Export

The **Export Settings and Calibration** page is used to enable uploading and downloading of the AXIS System configuration to an USB-C Drive. The configuration is written to the loader card in a format which can later be uploaded to the system.

Figure 5-30 Configuration Export

File Name
Create a name for the configuration file to be exported.

User Part Number
Optionally assign a user part number for the configuration file to be exported.

Password Protect
Optionally enable this setting to password protect the configuration file to be exported. This password will be required when subsequently attempting to import the configuration file on any system.

Password
If Password Protect is enabled, this field sets the password for the associated configuration file.

Show Password
If disabled, the password will be visually obscured. If set to enabled, the password will be displayed in the password key selection.

Export
Pressing this key initiates the configuration file export, based on the other settings defined in this page.

5.9.3.2 Configuration File Import

NOTE

If restoring data to the system from a backup, all previously saved data (including calibration data) will be loaded. If saved configuration data is loaded into a different AXIS flight display system, the aircraft specific calibration data will not be overwritten.

NOTE

Note that the file must be from the same system type.

It is possible to use the configuration file generated in section 5.9.3.1 to import previously saved Configuration settings and/or calibrations to the system. Touch **MISC** app > **Config** tab and use the tools described below to manage configuration imports and restores.

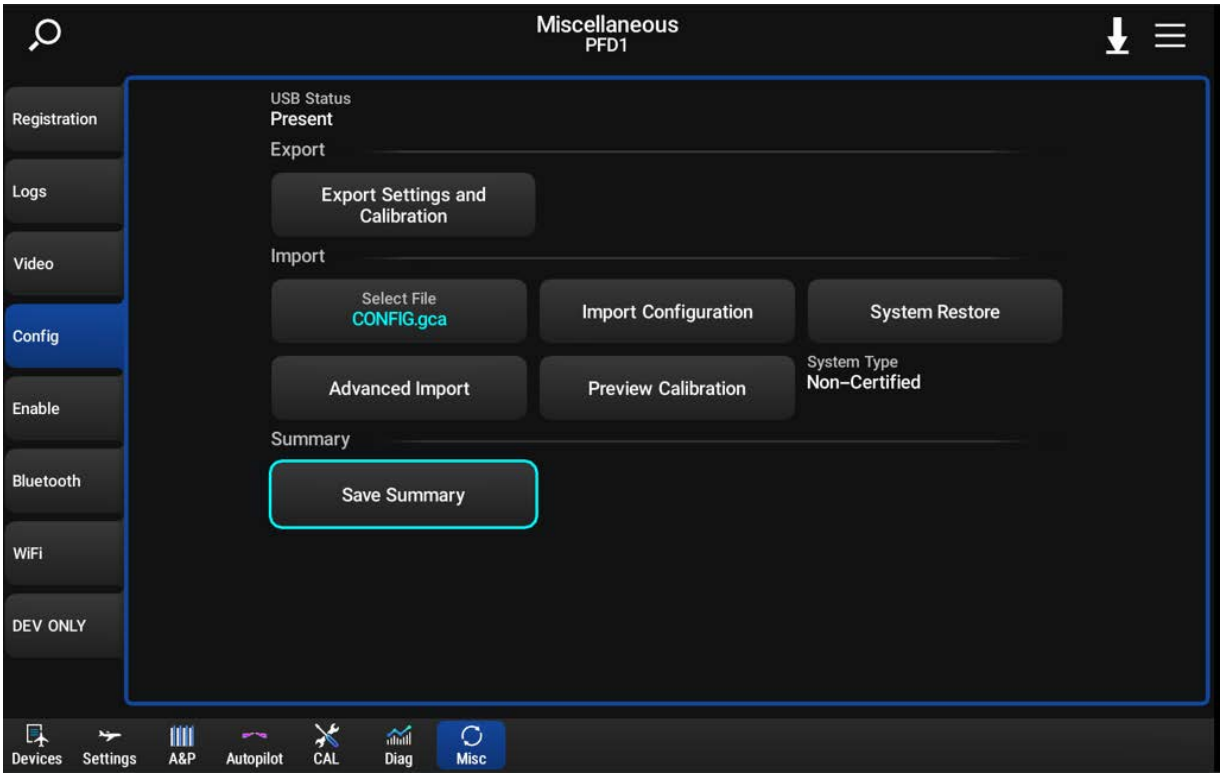

Figure 5-31 Miscellaneous Config Page

Select File

Touch **Select File** to queue any configuration file present on USB-C drive for import.

Import Configuration

When a file is selected, touch **Import Configuration** provides an overview of the configuration file to be imported, and allow the user to review before accepting the import. A configuration file import will not import critical calibration data, like fuel quantity calibration.

Once the import is finished, the AXIS flight display will need to be restarted. Touch **Restart** to reboot the system into configuration mode.

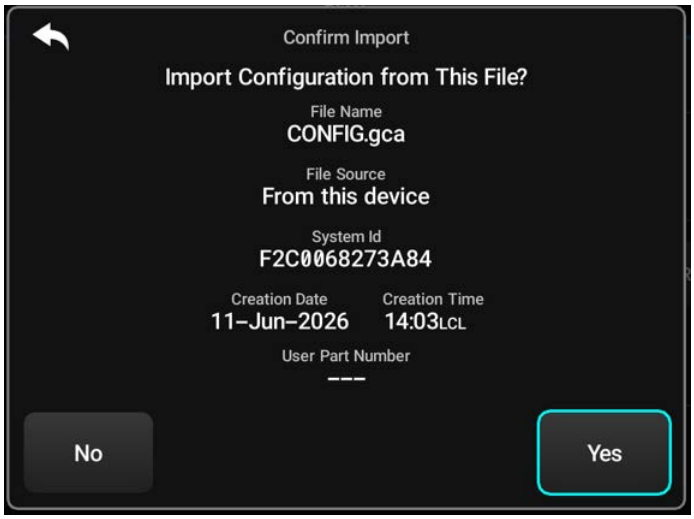

Figure 5-32 Confirmation of Import File Page

System Restore

When a file is selected, touching **System Restore** provides an overview of the configuration file to be imported, and allow the user to review before accepting the import. A configuration file system restore will import critical calibration data, like fuel quantity calibration. If the configuration file selected for a system restore is determined to have been generated by a different system, this key will be disabled.

Once the import is finished, the AXIS flight display will need to be restarted. Touch **Restart** to reboot the system into configuration mode.

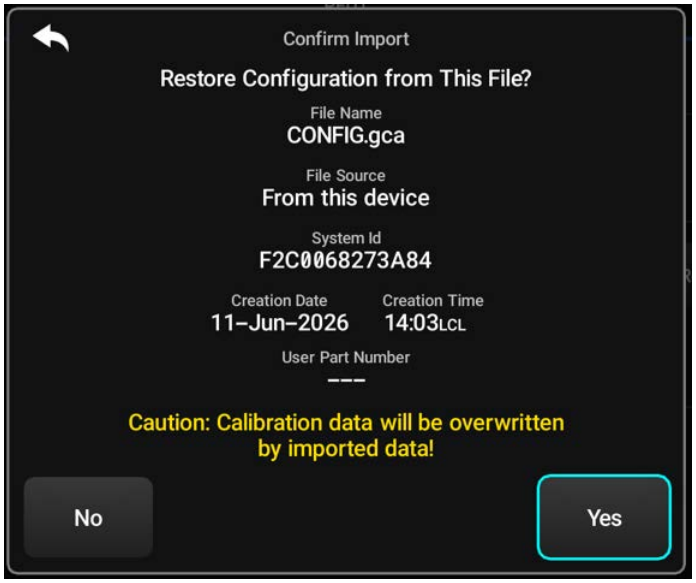

Figure 5-33 Confirm Import Page

Advanced Import

Allows the selection of a subset of configuration settings and calibrations to be imported. If Advanced Import is used, only specific configuration or calibration information relating to the selected category will be imported by the display.

Once the import is finished, the AXIS flight display will need to be restarted. Touch **Restart** to reboot the system into Configuration mode.

CAUTION

Do not attempt to import EIS configuration generated by a system using a different EIS LRU.

NOTE

If the LRUs associated with the category do not exist in the system, this import method will not be available.

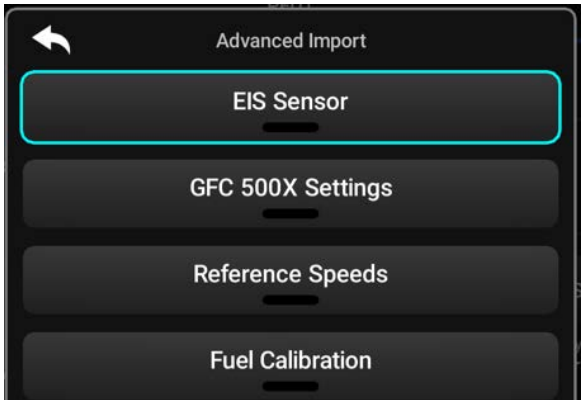

Figure 5-34 Advanced Import Page

Preview Calibration

Allows saved fuel calibrations to be viewed prior to importing. Touch Type to select between different sensor inputs in the system, for which a calibration may be stored on the configuration file.

NOTE

If the system importing the configuration file does not have matching associated sensors configured, this preview will not be available.

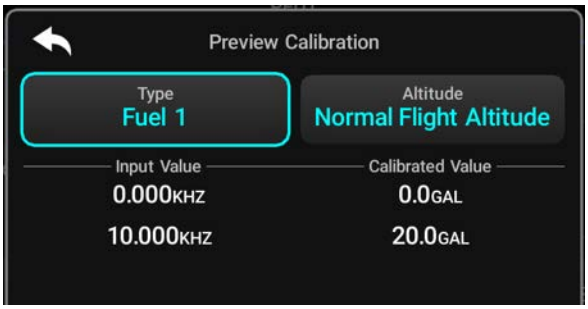

Figure 5-35 Preview Calibration Page

5.9.3.3 Configuration Summary

Touch **Save Summary** to export a human readable record of all stored configuration settings. This file is written to the USB-C drive and can be viewed on a personal computer.

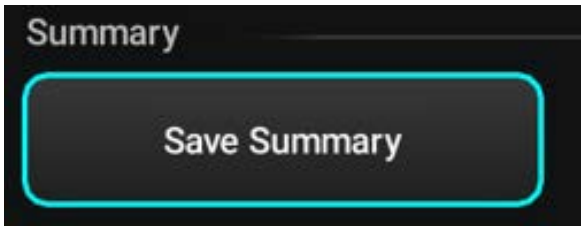

Figure 5-36 Save Summary Key

5.9.4 Enable

CAUTION

Once features are enabled, changing the Unit ID or System ID will result in removing the previously enabled feature(s). Additional feature enablement(s) must be applied if either the Unit ID or System ID is changed.

NOTE

Enabled features are automatically enabled on all AXIS flight displays in the system

The AXIS flight display system capabilities can be further enhanced by feature enablement options. To do so, a feature unlock USB-C must be inserted into the port on the front of PFD1. The following feature enablements are available for the AXIS flight display system:

- TAWS-B
- ChartView
- Surfacewatch

To unlock features, use the following procedure:

1. Obtain the System ID (alphanumeric) by touching **Misc** > **Registration**.
2. Log in to the associated flyGarmin.com account.
3. Select the desired AXIS flight displays feature and enter the System ID to download the enablement to a USB-C drive.
4. Power on AXIS PFD1 in Configuration mode.
5. Touch **Misc** > **Enable**.
6. Insert a USB-C drive with the enablement into the port on the AXIS flight display.
7. Wait for USB Status to show “Present.” Locked features will be displayed at the bottom of the page.
8. Touch **Unlock [Feature]**.
9. Follow any on-screen instructions.
10. For each feature enablement, a power cycle is required.

To enable unlocked features, use the following procedure:

1. Power on AXIS PFD1 in Configuration mode.
2. Touch **Misc** > **Enable**.
3. Select an unlocked feature to enable it.

5.9.5 Registration

The Registration tab displays the System ID and allows for the AXIS flight display system to be registered. With a PED, scan the QR code and follow the instructions to register the AXIS flight display system on flyGarmin.com. This facilitates the purchase of databases and flight data log management for the aircraft.

NOTE

NOTE: During this process, it is also important to use flyGarmin.com to register all LRUs for warranty purposes.

5.9.6 Bluetooth

Connection Settings

Refer to section 5.9.8.1 for more information.

Bluetooth

Configures if the Bluetooth access point is currently on.

5.9.7 WiFi

The WiFi tab on the Miscellaneous page allows the user to configure settings associated with crew WiFi networks in the aircraft.

Connection Settings

Refer to section 5.9.8.2 for more information.

WiFi Band

NOTE

5GHz is prohibited in some areas, reference local communication restrictions for more information.

Configures the frequency range to be used for the WiFi access point. Selections are *2.4 GHz* or *5 GHz*. Select 5 GHz for significantly faster database transfers.

WiFi Channel

Configures the specific band channel to be used for the WiFi access point. The WiFi Channel setting selects the 2.4 GHz WiFi access point channel and can be set between 1 and 14. Unavailable if WiFi Band is set to 5GHz.

Garmin Pilot WiFi

Allows user to connect to AXIS display WiFi to PED, to facilitate Garmin Pilot integration.

NOTE

Garmin Pilot WiFi must be enabled for Database Concierge wireless database transfers.

In Air WiFi

When Garmin Pilot WiFi is enabled, this setting determines if Garmin Pilot WiFi is available while airborne. Garmin Pilot WiFi connectivity is limited to ground operations, when this setting is disabled.

5.9.8 Connection Settings

The connection settings page can be accessed from either the WiFi or Bluetooth tab, in the MISC Application. Depending on which tab it is accessed from, will determine which page is displayed upon opening.

5.9.8.1 Bluetooth

The Bluetooth Tab of the connection settings page allows for the management of Bluetooth interfaced devices. Each Bluetooth capable device in the AXIS system is shown with an individual device name. A maximum of three Bluetooth connections can be made to GDU 116 AXIS displays. This page reflects the number of those available slots which are in use.

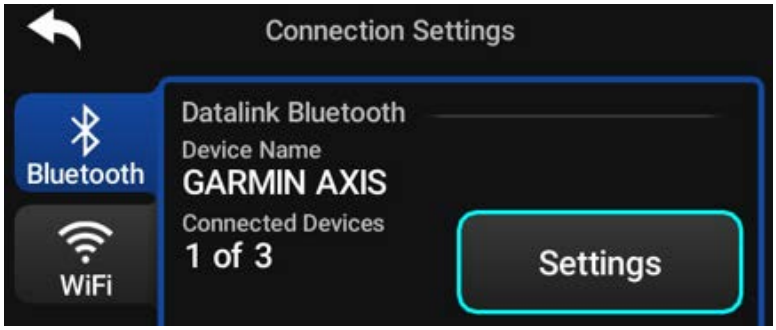

Figure 5-37 Bluetooth Connection Settings

Touch **Settings** to modify related Bluetooth settings, and add or remove Bluetooth interfaced devices. The Unit name and Bluetooth MAC Address are displayed as data fields.

Bluetooth

Use this toggle to enable or disable Bluetooth in the AXIS display unit.

Bluetooth Device Name

Use this field to rename the AXIS display Bluetooth function. This is the title that will appear on the list of available Bluetooth devices, on the cross side PED.

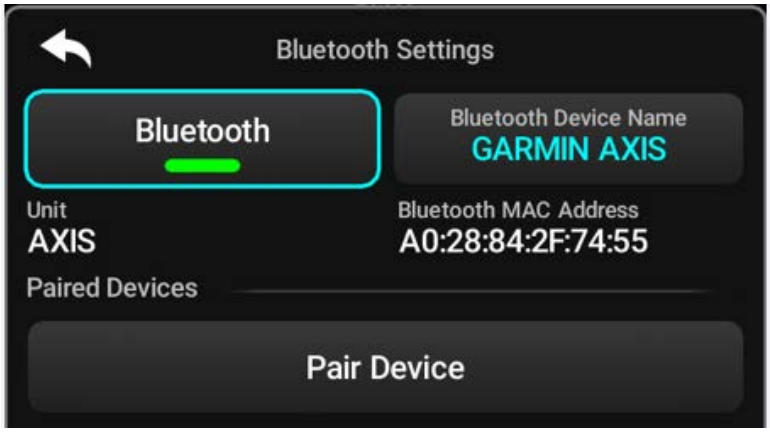

Figure 5-38 Pair Bluetooth Devices

Touch **Pair Device** to add a new Bluetooth device.

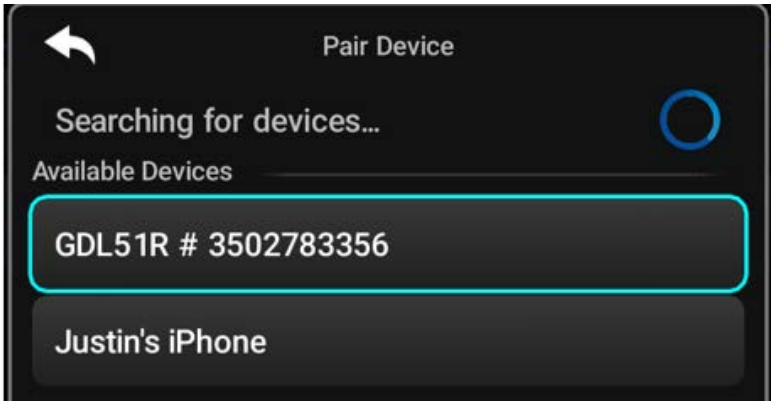

Figure 5-39 Searching for Devices

Touch the Bluetooth device you intend to pair with the AXIS display. This will generate a popup on both the AXIS display and the interfacing device, to accept the pairing command. Accept on both units.

An option to enable Autoreconnect for the device will be presented. Press Yes to enable Autoreconnect. If Yes is selected, the AXIS display will automatically connect to the specified Bluetooth device on each subsequent power cycle.

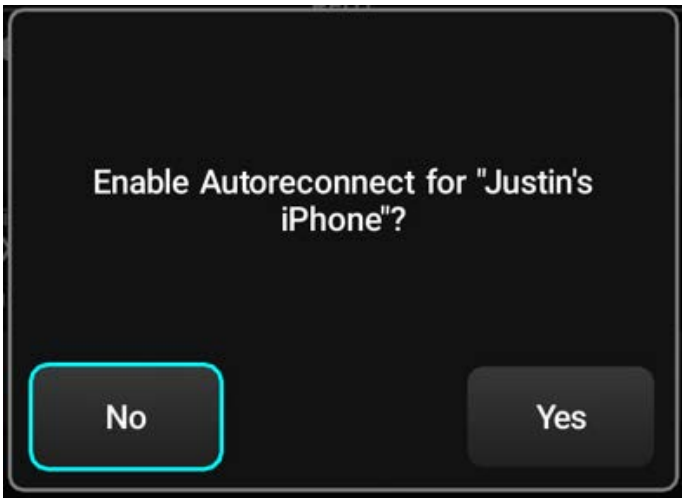

Figure 5-40 Enable Autoreconnect

When a Bluetooth device is paired with the system, it will be shown in the list of Paired Devices the Bluetooth settings page.

Figure 5-41 Bluetooth Device Paired

Touch a device in the Paired Devices list to modify settings associated with the device, as follows:

Autoreconnect

Enable or disable Autoreconnect. If enabled, the AXIS display will automatically connect to the specified Bluetooth device on each subsequent power cycle.

Disconnect

This function will disconnect the interfacing Bluetooth device from the AXIS display. The Bluetooth device will still be shown in the Paired Devices list of the Bluetooth settings page. If autoreconnect is enabled for the specified device, it will be automatically reconnected on subsequent power cycles.

Forget

This function will unpair the Bluetooth device from the AXIS display, and remove the device from the list of paired devices. The interfacing device will not be paired with the display on subsequent power cycles, no matter the previous state of the Autoreconnect setting.

5.9.8.2 WiFi

The WiFi tab of the Connection settings page allows for the management of WiFi interfaced devices. Each WiFi capable device in the AXIS system is shown with an individual device name. A maximum of three WiFi connections can be made to GDU 116 AXIS displays. This page reflects the number of those available slots which are currently in use.

To pair a device via WiFi, first ensure the Garmin Pilot WiFi configuration setting in this page, is enabled.

Open the list of available WiFi connections on the interfacing device, and select the device that matches the title specified by the AXIS WiFi SSID configuration setting, described below.

NOTE

Device must already be connected via Bluetooth to establish a WiFi connection. Once a WiFi connection is established, Bluetooth is no longer required. If connection to WiFi is attempted in the absence of a Bluetooth connection, the display will prompt "Pair device to access Connext data." Use the Pair function to connect to Bluetooth, to proceed.

When a device is connected, the interfacing device will appear in the list of Connected Devices, in the WiFi Settings page.

Garmin Pilot WiFi

Enable or disable the WiFi access point in the AXIS flight display.

WiFi SSID

Allows for modification of the name of the WiFi access point built into the AXIS flight display. This is the name that will be presented on an interfacing device's list of available connections.

WiFi Password

Allows for modification of the password for the WiFi access point built into the AXIS display. Enter this password when prompted on the screen of the interfacing device.

5.10 Generic Data Outputs

5.10.1 Generic ARINC 429 Device

The generic ARINC 429 device can be used to provide ARINC 429 data to a third-party device.

Use the "Add Device" function described in section 5.3.1 to add the device and specify the AXIS system ARINC 429 output port connected to the interfacing LRU.

Table 5-22 EFIS Airdata Format 1

Label #	Parameter Name
102	Selected Altitude
110	VLOC Course (1/2)
127	Landing Field Elevation
203	Pressure Altitude
204	Barometric Altitude
206	Indicated Airspeed
210	True Airspeed
211	Total Air Temperature
212	Vertical Speed
213	Static Air Temperature
235	Baro Setting
244P	Fuel Mass Flow
247P	Fuel Mass
271P	AFCS Pitch Status
274P	Glide Command
276P	AFCS Roll Status
277P	AFCS Status
320	Magnetic Heading
325	Roll Angle
371G	Manufacturer ID
377	Equipment ID
100P	GPS Course (1/2)

Table 5-23 EFIS Airdata Format 2

Label #	Parameter Name
102	Selected Altitude
110	VLOC Course (1/2)
127	Landing Field Elevation
203	Pressure Altitude
204	Barometric Altitude
206	Indicated Airspeed
210	True Airspeed
211	Total Air Temperature
212	Vertical Speed
213	Static Air Temperature
235	Baro Setting
244P	Fuel Mass Flow
247P	Fuel Mass
271P	AFCS Pitch Status
274P	Glide Command
276P	AFCS Roll Status
277P	AFCS Status
320	Magnetic Heading
325	Roll Angle
371G	Manufacturer ID
377	Equipment ID
100P*	Selected Course (1/2)

*Can be either GPS or VLOC

6 SYSTEM CHECKOUT

6.1 Configuration Mode Ground Check 6-2
6.1.1 LRU Status Check 6-2
6.2 EIS Checks 6-3
6.2.1 EIS Configuration Check 6-3
6.2.2 Temperature Sensor Check 6-3
6.2.3 Sensor Checks 6-3
6.2.4 EIS Engine Run-up Check 6-4
6.3 GSU Pitch/Roll Offset Calibration 6-5
6.4 GMC Pitch/Roll Offset Calibration 6-7
6.5 Engine Vibration Test 6-8
6.6 Magnetometer Interference Test 6-9
6.7 Magnetometer Calibration 6-12
6.8 NAV 6-14
6.8.1 NAV Receiver Check 6-14
6.8.2 NAV Receiver Check - Internal/Analog 6-14
6.9 GPS 6-16
6.9.1 Signal Interface/Acquisition Check 6-16
6.9.2 GPS CDI Check 6-17
6.10 Audio Panel/COM 6-18
6.10.1 Interface Check 6-18
6.11 Transponder 6-21
6.12 EMI Check 6-22
6.13 AOA Calibration 6-25
6.13.1 AOA (Angle of Attack) Configuration 6-25
6.13.2 AOA Calibration (Performed In-flight) 6-26
6.14 Autopilot 6-34
6.14.1 Autopilot - On Ground Autopilot Check Out 6-34
6.14.2 Autopilot - On-Ground Autopilot Set Up 6-35
6.14.3 Autopilot - On-Ground Autopilot Verification and Torque Set up 6-40
6.14.4 Autopilot - On-Ground Yaw Damper Verification and Torque Set Up 6-44
6.14.5 Autopilot In-Air Setup 6-45

6.1 Configuration Mode Ground Check

The configuration mode ground check procedures are intended to verify that each AXIS flight display and each LRU interfaced to the AXIS flight display system has been properly configured and calibrated. Steps not applicable to a particular installation may be skipped.

Throughout the configuration ground check section, references are made to particular functions and screens. If a function or screen is not available, ensure that the system has been configured correctly.

Before starting the configuration mode checkout, the following conditions must be met:

- AXIS flight displays in the system must be powered on in configuration mode
- System LRUs must be powered on
- Installed LRUs must be configured per section 5

6.1.1 LRU Status Check

The Devices application in configuration mode of the AXIS display provides a status for each LRU in the system. The icon next to each LRU reports one of three colors to indicate the status of the LRU, as described in table 6-1. Verify configured LRUs have a green indicator.

NOTE

It may take a few minutes for some LRUs to fully power up. Ensure enough time has passed to accurately perform this check.

Table 6-1 LRU Status indication

Icon	Description
	The LRU is communicating with the AXIS flight display and there are no faults present.
	There is a fault occurring with the LRU.
	The LRU is not communicating with the AXIS flight display.

6.2 EIS Checks

This section contains procedures to verify proper installation, operation, and gauge markings of the EIS. Begin with the engine off and at ambient temperature.

6.2.1 EIS Configuration Check

Verify the EIS strip is configured in accordance with "engine operating limitations."

1. Power on the AXIS flight display system in normal mode.
2. Verify the EIS strip displays on PFD1.
3. Verify there are no red or amber "X" marks present on any EIS gauge.
4. Verify the instrument gauge markings and ranges are in accordance with the powerplant limitations.

6.2.2 Temperature Sensor Check

This check applies to all temperature sensors interfaced to the EIS.

1. Power on AXIS PFD1 in configuration mode.
2. Verify the temperatures displayed on the EIS strip are within ± 2°C of the ambient temperature.

NOTE

If the engine has not had sufficient time to reach ambient temperature, it is necessary to verify each temperature source independently.

3. CHT, EGT, TIT, TIT2 (if two installed) - Verify each probe is wired to the corresponding cylinder number by applying heat to each sensor and monitoring the temperature rise on the EIS strip.

NOTE

If the indicated temperature decreases when heat is applied, the wire polarity may be reversed.

6.2.3 Sensor Checks

Perform the following check with the engine not running and at ambient temperature.

1. Power on PFD1 in configuration or normal mode.
2. Verify there are no red or amber "X" marks present.
3. Verify the following for each configured gauge:
   a. Manifold pressure gauge reads ambient pressure ±1 in-Hg. Estimate the ambient pressure by subtracting 1 in-Hg for every 1,000 ft of field elevation from the current barometric pressure.
   b. RPM gauge indicates 0 RPM.
   c. Fuel flow gauge reads 0 GPH.
   d. Oil pressure gauge reads 0 ±1 PSI.
   e. Fuel pressure gauge reads 0 ±1 PSI. It may be necessary to manipulate the throttle/mixture to reduce residual fuel pressure. If installed, turn on fuel boost pump and verify fuel pressure increases. Turn off the boost pump.
   f. Fuel quantity gauge(s) displays accurate quantities for each tank. Verify the indicated fuel quantity is 0 when the aircraft is fueled with the unusable fuel quantity.
   g. Shunt/Voltage gauge(s) are all available and showing the correct aircraft voltage and amperage with the engine off. An alternator load meter may indicate a small current if the alternator field is on.

6.2.4 EIS Engine Run-up Check

CAUTION

If engine indications are not within operating specifications shortly after starting, IMMEDIATELY shut down the engine and troubleshoot the problem. Failure to do so may cause engine damage.

An engine run-up check must be performed to ensure proper installation and configuration of the EIS sensors and gauges. Always follow engine start-up procedures appropriate to the aircraft.

1. Obtain an optical tachometer to monitor propeller RPM.
2. Place the aircraft in an open and clear area appropriate for an extended engine run-up.
3. Follow the engine start-up procedure as outlined in the aircraft manual. Adhere to the required observations immediately following the start, such as oil pressure within 30 seconds.
4. Verify the EIS RPM gauge matches the optical tachometer reading ±50 RPM.
5. Allow the engine to warm up and oil temperature to increase to within normal operating range.
6. Verify the engine oil pressure gauge is reading within the green range.
7. During all phases of the engine run-up, verify the EIS RPM gauge matches the optical tachometer reading ±50 RPM.
8. Verify the alternator load meter (if installed) and battery charge/discharge ammeter (if installed) indicate a positive load.
9. Perform individual magneto checks (if applicable) as specified by the aircraft manual.

If the RPM does not drop as expected when switching from both magnetos to one, then the P-lead, ignition switch wiring, or magneto timing is incorrect. Discontinue the test immediately and repair the ignition system.

10. Perform the engine pre-takeoff run-up checklist in accordance with the aircraft manual.
11. Verify all EIS readings are consistent with normal operation performance.
12. Verify all installed sensors and fittings are free of leaks.

6.3 GSU Pitch/Roll Offset Calibration

This procedure must be completed for each installed ADAHRS. For installations with multiple ADAHRS, this procedure can be conducted for each ADAHRS simultaneously.

NOTE

This procedure requires that the aircraft is leveled to within 0.25° of zero pitch and zero roll.

NOTE

This procedure requires configuration of the ADAHRS Unit Orientation (section 5.7.1.1).

NOTE

If an additional ADAHRS is installed in the aircraft, or the mounting location of an existing AHRS is changed, the pitch/roll offset calibration procedure must be performed again for all installed AHRS units before moving the aircraft. This applies to all ADAHRS sources in the system, including the GSU 25, GSU 73, GSU 75, and any installed SFD.

NOTE

This procedure requires orienting the aircraft to normal flight attitude, for example by using jacks or placing wood blocks under the nose-wheel. As another example, if the number of degrees "nose high" the aircraft flies in straight and level cruise is known, a digital level can be used to orient the aircraft to normal flight attitude before the calibration.

NOTE

The GSU 25 must be installed to be level within 30° of the in-flight level cruise attitude. In-flight level cruise attitude is not necessarily the same as the level reference provided by the manufacturer (such as fuselage longerons).

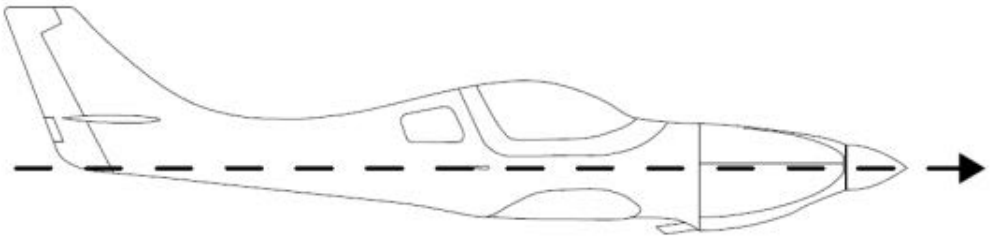

Figure 6-1 In-Flight Level Cruise Attitude

With the engine OFF, do the following:

1. On AXIS PFD1, touch **CAL** > **ADAHRS** > **GSU Pitch/Roll Offset Calibration**.
2. Select each ADAHRS unit to calibrate.
3. Touch **Next**.
4. To begin, touch **Start**. The display shows progress along with real time pitch/roll tilt values.
5. When complete, touch **Done**.

The display confirms whether each ADAHRS calibration is successful or failed.

If an ADAHRS unit failed its calibration, verify the orientation configuration is correct, then repeat this procedure.

NOTE

After each ADAHRS pitch/roll offset calibration procedure, the Magnetometer Calibration (section 6.7) must be completed.

NOTE

After completing this calibration procedure, if the mounting screws that secure the GSU are loosened for any reason, this procedure must be repeated.

NOTE

After completing this calibration procedure, while the aircraft is leveled, the GMC 507 calibration (section 6.4) can be performed next.

6.4 GMC Pitch/Roll Offset Calibration

NOTE

The aircraft does not require leveling for this procedure, as it does for the Pitch/Roll Offset Calibration of the primary ADAHRS. However, the aircraft must remain still during this calibration.

NOTE

This procedure is only required for installations which include a GMC 507 autopilot controller.

NOTE

This procedure must be performed after completion of the Pitch/Roll Offset Calibration for the primary ADAHRS.

Follow the prompts on the display. Initiate the test using the following procedure:

1. On AXIS PFD1, touch **CAL** > **ADAHRS** > **GMC Pitch/Roll Offset Calibration**.
2. To begin, touch **Start**.
3. When complete, touch **Done**.

6.5 Engine Vibration Test

NOTE

This procedure may be performed without completing the GSU Pitch/Roll Offset Calibration procedure (section 6.3).

NOTE

The Engine Vibration Test is required for all installations to validate the vibration characteristics of the installation.

NOTE

Passing the Engine Vibration Test does not remove the requirement to rigidly mount the GSU to the aircraft primary structure. The Engine Vibration Test is intended to help discover mounting issues but successful completion of the test does not validate the mounting of the GSU and GMU, and does not account for all possible vibration profiles that may be encountered during normal aircraft operation.

Follow the prompts on the display. Initiate the test using the following procedure:

1. On AXIS PFD1, touch **CAL** > **ADAHRS** > **Engine Vibration Test**
2. Select each ADAHRS unit to be tested.
3. Touch **Next**.
4. To begin, touch **Start**.
5. Gradually increase power from idle to full-throttle and back to idle over the course of one to two minutes. The test data displays as the test progresses.
6. When complete, touch **Done**.

NOTE

If failures are indicated, the Engine Vibration Test may be repeated up to two more times. If the test does not pass after three attempts, the installation cannot be considered reliable until the source of the vibration problem is identified and fixed. In the event of repeated failures during the test, record the values that are reported to be out of range for future reference.

The following are potential causes of failure with the engine vibration test for the GSU and/or GMU:

- Excessive flexing of the mechanical mounting with respect to airframe
- Vibration or motion caused by neighboring equipment and/or supports
- Mounting a GSU at a location that is subject to severe vibrations (e.g., close to an engine mount)
- Mounting screws and other hardware not firmly attached and/or GSU connector jackscrews are not firmly fastened
- Absence of recommended mounting supports
- GSU connector not firmly attached to unit
- Cabling not firmly secured to supporting structure
- An engine/propeller combination that is significantly out of balance

NOTE

In some aircraft, attempting the engine vibration test on a day with very strong and/or gusty winds may cause the test to occasionally fail. However, windy conditions should not be taken as evidence the test would pass in calm conditions; an actual pass is required before the installation can be considered adequate.

6.6 Magnetometer Interference Test

NOTE

This test verifies that no nearby device or material is interfering with the GMU, which would corrupt the attitude and heading data from the GSU AHRS. It is required at initial installation and must be repeated after any electrical or material change within 10 feet of the GMU. Qualifying changes include, but are not limited to, wiring, shielding, or grounding changes to nearby electrical devices (such as lights, strobes, or beacons), and the addition, removal, or modification of ferrous or electrically conductive materials in the same wing as the GMU.

NOTE

The real time display shown during the interference test is only valid for the location of the GMU when the test was initiated. If using this procedure to evaluate multiple mounting locations, the test must be started over for each location, failure to do so could provide incorrect test results.

NOTE

Garmin recommends this test be performed at least once every 12 months.

The Magnetometer Interference Test is used to ensure unacceptable levels of magnetic interference do not exist in the vicinity of the GMU.

Prepare the aircraft and GMU for the location survey by completing the following steps:

1. Prepare a detailed Test Sequence List with start and stop times for exercising all aircraft components and devices that may affect the operation of the GMU through movement of ferrous metal parts or electrical inductance. Aircraft components included on the list will vary depending on aircraft model. An example survey sequence is provided in table 6-2.
2. Position the aircraft in a magnetically quiet area. This step may involve repositioning large metal objects including aircraft and ground support equipment away from the survey area. The interior of an aircraft hangar may prove to be a challenging environment to complete this test.
3. Ensure the aircraft will remain stationary throughout the test.
4. For aircraft with retractable landing gear, facilitate the cycling of the gear using jacks.

Before beginning the survey, ensure that all items listed on the test sequence are in their pre-exercise states (e.g., control surfaces neutral, flaps up, lights off). Perform the survey by completing the following steps:

NOTE

For installations with multiple magnetometers, the following steps must be performed on each unit.

1. On AXIS PFD1, touch **CAL** > **Magnetometer** > **Magnetometer Interference Test**.
2. Touch **Next**.
3. To begin, touch **Start**.

NOTE

The checklist instructs the operator to "prepare a detailed test sequence." An example sequence is shown in table 6-2.

4. Perform each action on the Test Sequence List at the specified time and duration to ensure accurate identification of magnetic field deviation sources after the survey.

NOTE

It is important that all actions are carried out in the order and at the precise elapsed time as specified in the prepared test sequence.

5. Monitor the magnetic field deviation percentage throughout the survey. If deviation levels exceed thresholds, mark the survey sequence exercises during which these deviations occurred.
6. When complete, touch **Done**.

   The following information displays:

   - Pass or fail
   - Worst-case magnetic deviation as a percentage of the limit
   - Timestamp of the occurrence
7. Repeat the procedure for each installed GMU.

If the test passes, no further action is required.

If the test fails, the installation is considered unreliable until the source of magnetic interference is identified and corrected. Repeat the magnetometer interference test until a passing result is obtained.

For a failed test, record the three magnetometer maximum deviation values along with their corresponding timestamps. A maximum deviation exceeding 100% of the allowable limit in any axis indicates a condition that must be corrected. Compare the recorded timestamps with the planned test sequence to identify the action that introduced the interference. Contact Garmin Aviation Product for assistance in resolving the problem.

NOTE

Some common reasons for a failed magnetometer interference test are:

- *Equipment, wiring, or ferro-magnetic items are installed too close to the magnetometer*
- *An electronic device has become grounded through the aircraft structure instead of the proper ground wire in a twisted shielded pair, especially if the ground return path through the aircraft structure passes near the GMU.*
- *New equipment is installed in close proximity to the GMU.*

Table 6-2 Example Magnetometer Interference Test Sequence List

A/C Reg.:_____ **Survey data file name:_____**

Elapsed Time (sec)	Elapsed Time (min:sec)	Action
0	0:00	Test begins (calibration period – no activity permitted)
20	0:20	Calibration period ends
30	0:30	Aileron full right
40	0:40	Aileron full left
50	0:50	Aileron level
60	1:00	Rudder full right
70	1:10	Rudder full left
80	1:20	Rudder neutral
90	1:30	Elevators full up
100	1:40	Elevators full down
110	1:50	Elevators neutral
120	2:00	Flaps down
140	2:20	Flaps up
160	2:40	Landing gear up
180	3:00	Landing gear down
190	3:10	Speed brake up
200	3:20	Speed brake down
210	3:30	Navigation lights on
220	3:40	Navigation lights off
230	3:50	Landing lights on
240	4:00	Landing lights off
250	4:10	Taxi lights on
260	4:20	Taxi lights off
270	4:30	Air conditioning on
280	4:40	Air conditioning off
290	4:50	Landing lights and taxi lights on
300	5:00	Landing lights and taxi lights off
310	5:10	Strobes on
320	5:20	Strobes off
330	5:30	Recognition lights on
340	5:40	Recognition lights off
350	5:50	Turn on all wingtip lights simultaneously
360	6:00	Turn off all wingtip lights simultaneously
370	6:10	Beacon on
380	6:20	Beacon off
390	6:30	AP engaged in a pitch and roll made (to engage servo clutches)
400	6:40	AP disengaged
410	6:50	Pitot heat on
420	7:00	Pitot heat off
430	7:10	End of test

6.7 Magnetometer Calibration

CAUTION

The Magnetometer Calibration must be carried out at a location that is determined to be free of magnetic disturbances, such as a compass rose. Attempting to carry out this maneuver on a typical ramp area will not yield a successful calibration. The accuracy of the ADAHRS cannot be guaranteed if this calibration is not performed at a magnetically clean location.

NOTE

If the GMU mounting screws are loosened for any reason after completing this calibration, the calibration must be repeated.

NOTE

The GSU Pitch/Roll Offset Calibration (section 6.3) and Engine Vibration Test (section 6.5) must be completed prior to performing this procedure.

NOTE

It is important that a Magnetometer Interference Test has been successfully completed prior to completing this calibration (section 6.6).

NOTE

A valid GPS position fix is required to complete this magnetometer calibration procedure.

Taxi the aircraft to a site confirmed free of magnetic disturbances. Make sure there are no nearby magnetic materials on or near the perimeter of the site. If unavoidable, maneuver the aircraft to keep the magnetometer from passing within 20 feet (6.1 meters) of such objects. And make sure that vehicles or other aircraft are an adequate distance [40 feet (12.2 meters)] away from the aircraft under test.

At the site, align the aircraft to a heading of magnetic north (±5°). It is best to offset the aircraft position to the left (west) of the north/south axis to allow turning clockwise around the site as indicated in figure 6-2.

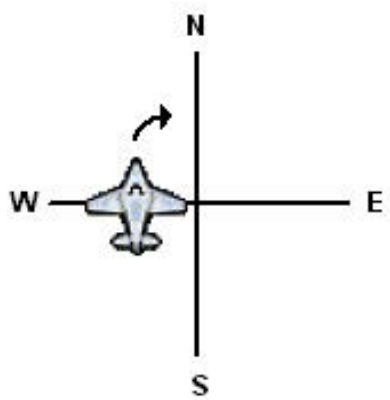

Figure 6-2 Aircraft Alignment

1. On AXIS PFD1, touch **CAL** > **Magnetometer** > **Calibration**.
2. Touch **Next**.
3. To begin, touch **Start**.

   The system will prompt you to either hold the aircraft, or turn the aircraft, throughout the calibration.

4. When prompted, slowly turn the aircraft to the right, until the display prompt changes to “HOLD POSITION.”
5. Do not move the aircraft until prompted again to begin another turn.

   The calibration will go through twelve cycles of holding, then turning to the right before completing a full circle.

   The completed calibration status should display as “Successful.”
6. When complete, touch **Done**.

NOTE

For GSU 73 installations, the magnetometer calibration requires the aircraft to remain nearly motionless during the hold portions of the procedure. Aircraft angular motion exceeding 0.5° per second will prevent the hold from progressing, and a hold that does not complete within two minutes will cause calibration to abort. Gusty wind, prop blast from nearby aircraft, or occupant movement that rocks the aircraft can exceed this threshold. If the hold does not count down to zero while holding position, minimize aircraft motion or wait for calmer conditions, then retry the procedure.

NOTE

For GSU 75 installations, the magnetometer calibration requires the aircraft to be turned at a continuous rate above 1.5° per second through each heading during the turn portions of the procedure. If the turn rate stays below this rate for a couple of seconds, the calibration records an unintended extra station at the current heading. Soft or uneven ramp surfaces, hesitant nose-wheel steering, or stopping to reposition can cause the turn rate to drop below the threshold. If the display reports too many stations, retry the procedure.

NOTE

If more than one magnetometer is installed, it is recommended to perform the Magnetometer Calibration procedure for both magnetometers consecutively, one procedure immediately followed by the next. This is especially important if something about the airplane has been changed that requires this procedure to be repeated.

6.8 NAV

6.8.1 NAV Receiver Check

1. Ensure NAV 2 is powered off.
2. Power on AXIS PFD 1 and NAV 1 (if different than PFD 1) in normal mode.
3. Touch the HSI.
4. If enabled, turn Synthetic Vision off.
5. Tune NAV 1 to a VOR frequency (it is not necessary that a valid VOR signal is being received).
6. Touch the CDI display.
7. Touch **CDI** and select **VOR** or **VOR1**.
8. Verify the CDI displays VOR or VOR1.
9. Tune the NAV receiver to a localizer frequency. It is not necessary to receive a valid localizer signal.
10. Verify the CDI displays LOC or "LOC1."
11. If NAV 2 is installed, power off NAV 1 (if not PFD 1).
12. Power on NAV2.
13. Repeat the above steps by selecting **NAV2**.

6.8.2 NAV Receiver Check - Internal/Analog

1. Ensure NAV 2 is powered off.
2. Power on AXIS PFD 1 and NAV 1 (if different than PFD 1) in Normal mode.
3. Touch the HSI, if Synthetic Vision is enabled, turn this function off.
4. Ensure that there is a valid attitude and heading display on the PFW.
5. Tune NAV 1 to a VOR frequency. It is not necessary to receive a valid VOR signal.
6. Touch the CDI display.
7. Touch **CDI** and select **VOR** or **VOR1**.
8. Verify the CDI displays VOR" (or "VOR1"/"VOR2" for installations with dual navigators).
9. Using a VOR/ILS test set, generate a 0° FROM radial VOR signal.
10. Tune the NAV receiver to the test frequency.
11. Adjust the course pointer until the deviation is centered and FROM is indicated.
12. Verify the course pointer setting is 0 ± 4°.
13. Repeat the above steps using VOR FROM signals at 90°, 180°, and 270°.
14. Verify the course pointer is within 4° of the simulated VOR bearing.
15. Tune NAV 1 to a localizer frequency. It is not necessary to receive a valid localizer signal.
16. Verify that the CDI on the PFW displays "LOC" (or "LOC1"/"LOC2" for installations with dual navigators).
17. Set the course pointer to the current heading (i.e., straight up on the PFW CDI).
18. Using a VOR/ILS test set, generate a localizer and glideslope signal as specified in table 6-3.
19. Verify the course pointer deviation bar and glideslope indications are as specified in table 6-3.
20. If dual NAV receivers are installed, power off NAV 1 and power on NAV 2.
21. Repeat the check using NAV 2.

Table 6-3 Localizer/Glideslope Checks

Test Set Setting (DDM)		PFD Indication	
Localizer	**Glideslope**	**Localizer**	**Glideslope**
0.000	0.000	Centered (within fuselage on aircraft symbol)	Centered (covering horizontal white line)
0.078 Right	0.088 Down	Half-scale right (first dot covered by diamond)	Half-scale down (first dot covered by diamond)
0.155 Right	0.175 Down	Full-scale right (second dot covered by diamond)	Full-scale down (second dot covered by diamond)
0.078 Left	0.088 Up	Half-scale left (first dot covered by diamond)	Half-scale up (first dot covered by diamond)
0.155 Left	0.175 Up	Full-scale left (second dot covered by diamond)	Full-scale up (second dot covered by diamond)

6.9 GPS

6.9.1 Signal Interface/Acquisition Check

NOTE

All avionics should be turned off at the start of this test except AXIS PFD 1, GPS 1 (if not PFD 1), GPS 2 (if installed), and a G5/GI 275 standby (if connected to a VFR GPS antenna).

Verify each AXIS flight display and any interfaced external GPS sources are able to acquire sufficient satellites to compute a GPS position.

1. Power on the following in normal mode:
   - AXIS PFD 1
   - GPS 1 (if different than PFD 1)
   - GPS 2 (if installed)
   - G5/GI 275 VFR GPS source
2. On PFD 1, press **MENU** twice.
3. Touch **Settings & Tools > Sensors**.
4. For each configured GPS source, ensure the status does not show “Acquiring.”

NOTE

After installation, the initial acquisition of position can take up to twenty minutes. Subsequent acquisitions will not take as long.

If the unit is unable to acquire satellites, move the aircraft away from obstructions that might be shading GPS reception. If the GPS solution does not improve, check the GPS antenna installation. Once GPS position information is available, perform the following steps for each GPS source (GPS 1, GPS 2, and VFR GPS):

1. Touch the position sensor to open the corresponding sensor status page.
2. Verify the latitude and longitude agree with a known reference position.
3. While monitoring the Sensors FMS Position page, turn on other avionics one at a time and check the GPS signal reception to verify it is not affected (no significant signal degradation).
4. Before proceeding with other checks, verify that any connected equipment is receiving data from GPS 1 and/or GPS 2 and is functioning properly.

6.9.2 GPS CDI Check

NOTE

GPS satellite reception is required for the following steps.

1. Verify the AXIS PFD1 is in Normal mode.
2. Verify GPS 1 and GPS 2 (if installed) are powered on.
3. Touch the CDI display to bring up the PFW menu.
4. Touch **CDI** and verify each GPS source is selectable.
   - If neither GPS 1 or GPS 2 is a GNS 4XXW/5XXW, GNS 480, or GTN 6XX/7XX navigator, FMS will be a selectable option. No further action is necessary
   - If either GPS 1 and/or GPS 2 is a GNS 4XXW/5XXW, GNS 480, or GTN 6XX/7XX navigator, GPS 1 and GPS 2 (if installed) will be selectable options.
5. Select the GNS or GTN 6XX/7XX navigator as the CDI source.
   - For a GNS 4XXW/5XXW or GTN 6XX/7XX navigator, while on the Power-up Self-test page, verify that the PFW CDI displays the correct lateral and vertical deviation information.
   - For a GNS 480 navigator, while it is going through its power-up sequence, verify that the PFW CDI displays the correct lateral and vertical deviation information.

6.10 Audio Panel/COM

The following checks are required if a GDU 116C/NC or an external audio panel are installed.

6.10.1 Interface Check

1. Power on AXIS PFD1 and the external audio panel (if installed) in Normal mode.
2. Verify that a yellow “X” is not displayed over the Audio key.

After configuring the audio panel, an in-aircraft checkout may be performed with a good microphone, headset, speaker, and avionics receivers.

For instructions on how to operate the AXIS flight display in Normal mode during the installation checkout procedures, refer to *AXIS Flight Display Pilot’s Guide*. Ensure every function of the audio panel correctly operates.

NOTE

In the procedural steps outlined below, allow for variation in the configuration settings for the particular installation under test.

6.10.1.1 Failsafe Operation Check

1. Power off the audio panel by pulling the AUDIO circuit breaker.
2. Check the failsafe operation:
   - When using the GDU 116C/NC internal audio panel, exercise the other COM radio microphone, microphone key, and audio over the pilot’s headphones.
   - When using an external audio panel, exercise COM 1 microphone, microphone key, and audio over the pilot’s headphones.

NOTE

If utilizing the Failsafe Warn input, this audio channel should also be verified by causing the audio source to provide audio and making sure the alert is heard over the pilot's headset.

NOTE

Use of a true mono headset is required for this test (not a stereo headset with a mono/stereo switch) to verify of proper wiring even if a stereo jack is provided in the installation. Wiring the left channel (tip contact) and right channel (ring contact) backwards will cause failsafe mode not to function with mono headsets. This will guarantee the right channel (ring terminal) being shorted to the return (sleeve terminal) by the mono headset’s plug. During power-on operation, this short will not damage the audio panel.

3. Verify the COM radio can key and transmit the pilot’s mic audio by checking reception of the transmission with another radio tuned to receive this transmission (i.e., verify Pilot PTT and mic operation is delivered to this transceiver).

6.10.1.2 COM Transceiver Operational Check

1. Power on AXIS PFD1, the external audio panel (if installed), and each installed COM radio.
2. Connect a headset to the pilot's headset output and mic input jack.
3. Verify each installed COM can be heard when selected.

NOTE

Depending on configuration settings, the mic selected COM may mute audio from other COMs.

4. Verify each installed COM transmits clear audio from the pilot's mic when the Pilot PTT key is pressed.

NOTE

Depending on configuration settings, other transceivers may be muted during transmit. Also, the audio panel may mute the speaker during PTT.

5. Move the headset to the copilot's headset jacks and verify that any one of the installed COMs receives and transmits the copilot's MIC properly.

6.10.1.3 NAV Audio Check

1. Power on AXIS PFD1, the external audio panel (if installed), and each installed NAV receiver.
2. Tune the NAV receiver to a local VOR station.
3. Turn on NAV radio in "ID" mode.
4. Verify the Morse code identifier is being received over the crew headsets.
5. If the audio is not heard, verify the wiring to the audio panel is correct.
6. Verify the audio volume is sufficient for all anticipated cockpit noise conditions.
7. Repeat steps 1 through 4 for NAV 2, if installed.

6.10.1.4 Alert Audio Check

If there is an alert audio source connected to the audio panel, the interface should be verified as described below:

1. Cause the alert audio source to produce audio (e.g., if a traffic system is installed, command the traffic system into self-test mode; if a TAWS system is installed, command the TAWS system into self-test mode).
2. Verify the alert audio source is heard in the pilot and co-pilot headsets and the audio volume is sufficient for all anticipated cockpit noise conditions. Adjust the audio volume level as needed, following the instructions in section 5.4.10.
3. If the alert audio source is not heard in the crew headsets, check the wiring from the source to the audio panel alert audio inputs.
4. Repeat this procedure for each alert audio source connected to the audio panel.

6.10.1.5 Receiver Audio Check

If there are receiver audio sources connected to the audio panel, the interface should be verified as described below. Ensure the audio panel and the interfaced receiver (e.g., DME, ADF, etc.) are powered on.

1. Plug in a headset at pilot and co-pilot position.
2. Tune the installed receiver to a valid station.
3. Verify the audio is being received over the crew headsets.
4. Verify the audio volume is sufficient for all anticipated cockpit noise conditions.
5. Adjust the audio output level as needed at the receiver.
6. Repeat steps 2 through 5 for each installed receiver.

6.10.1.6 Intercom System (ICS) Check

NOTE

If a monaural headset is plugged into any stereo phone jack position, no damage will occur to the audio panel. In the case of plugging a monaural headset into any passenger position, any stereo listener will lose one channel when another passenger plugs in a monaural headset.

1. Power on AXIS PFD1 in Normal mode.
2. Touch **Audio** to open the audio panel controls.
3. Ensure Pilot, Copilot, and Passengers are enabled so all ICS positions hear all others.
4. De-select or turn off other audio sources (e.g., marker beacon, transceivers, receivers, alerts). Some configurations may mute passenger intercom audio to crew when aircraft audio is present.
5. From the pilot headset position, verify the pilot, copilot, and all passenger mic inputs can be heard in the pilot's headset when speaking into the mic input.
6. Adjust the pilot volume, if necessary.
7. Speak into the pilot's mic and verify copilot mic audio is heard in the co-pilot headset.
8. Adjust the copilot volume, if necessary.
9. Repeat for each passenger headset.

6.10.1.7 Music System Check (If Installed)

NOTE

Music should mute as a result of an AXIS flight display audio output. If music fails to mute as a result of an AXIS key click audio or TAWS audio, adjust the alert audio squelch level to verify the input is sensitive enough to cause the music to mute.

1. Distribute the music to each position (e.g., pilot, co-pilot, passenger).
2. Verify the music source is turned up and is not muted.
3. Connect a stereo audio source to MUSIC 1 or MUSIC 2.
4. Verify the stereo audio is heard over each headset position.
5. Tune a station on COM 1 and monitor the COM. Verify the music audio is muted by active COM 1 audio (break squelch on COM 1, if necessary). Repeat this check for both the pilot and co-pilot headset positions. If music fails to mute, it is possible the squelch level for one of the unswitched alert audio inputs is set too low.

6.11 Transponder

GNX 375, all GTX 335(D)(R)/345(D)(R) transponders and GTX 33/33(ES)/330/330(ES) transponders with software v8.00 or later are compliant with RTCA/DO-181D, which specifies that the selection of transponder ALT and GND modes may not be controlled by the pilot. To allow the transponder to be operated in ALT mode while on the ground for the purposes of performing periodic testing in accordance with the requirements of 14 CFR Part 91.413, a special transponder ground maintenance test mode is provided.

To access ground maintenance mode in an AXIS flight display system:

1. Access the Transponder controls in normal mode.
2. On the transponder page, touch **MENU** and select "Ground Maintenance Test" to force the transponder into ALT mode.

Transponder ground maintenance mode will be canceled following a power cycle, or if the aircraft is determined to be airborne.

NOTE

Installer Mode must be enabled for ground test mode to be available in Normal Mode. Refer to section 5.2.4 for more information.

6.12 EMI Check

An EMI check must be conducted once the AXIS flight display system is installed and all interfaces to external equipment are verified to be working correctly. The EMI check verifies that the AXIS flight display system is not producing unacceptable interference in other avionics systems and other avionics systems are not producing unacceptable interference in the system LRUs.

1. Enter equipment installed in the aircraft into the Source row and Victim column of table 6-5.
2. Apply power to all avionics systems except for the components that are considered to be part of the AXIS flight display system.
3. Verify all existing avionics systems are functioning properly.
4. Apply power to the AXIS flight display system components.
5. Remove power from all other avionics systems.

Before applying power to the next system, wait for the current system start-up sequence to finish.

6. Apply power and/or operate the systems listed on the fillable form, one system at a time. Exercise large electrical loads (e.g., pull/push circuit breakers or turn on/off probe heaters, landing lights, cycle flaps, etc).
7. Verify the AXIS flight display system functions properly. Verify there are no related messages displayed.
8. Verify each radio is functioning properly by completing the following:
   a. For each VHF COM radio, monitor one local frequency, one remote (far field) frequency, and one unused frequency.
      i. Verify no unintended squelch breaks or audio tones interfere with communications.
   b. For each VHF NAV radio, monitor one local frequency, one remote (far field) frequency, and one unused frequency.
      i. Verify there are no guidance errors.
      ii. Verify no audio tones interfere with the station ID.
9. If an EI FT-60 or an EI FT-90 fuel flow sensor is installed, verify the fuel flow indication is accurate and the indication does not fluctuate or invalidate the display.
   a. Transmit various modulating tones on each COM radio (e.g., whistling).
   b. Refer to section 5.5.2.2.3 for details if the fuel flow indication fluctuates.

NOTE

EMI check of the fuel flow must be performed with the engine running.

10. Verify all other avionic systems are functioning properly.

Table 6-4 Example EMI Victim/Source Matrix

SOURCE \ VICTIM	PFD 1	PFD 2	MFD 1	MFD 2	GMU 11	GMU 44(B)	GAD 29( )	GSU 25D	GSU 75	GDL 5XR	GEA24(B)	GEA 110	GTP 59	Magnetic compass	NAV Radio(s)	COM Radio(s)	Fuel Pump	Pitot Heat	Pulse Light	Generator	Pos Lt	Anti-Collision Lt	Landing Lights	Gov RPM Incr/Decr	Hydraulic System	Radio AGL	TAS/TCAS	Transponder	Audio Panel	Autopilot/SAS	GAP 26 Heater	GAD 27 Wig Wag	Dimmer	Elec. Standby Inst.
PFD 1	■																																	
PFD 2		■																																
MFD 1			■																															
MFD 2				■																														
GMU 11					■																													
GMU 44(B)						■																												
GAD 29( )							■																											
GSU 25D								■																										
GSU 75									■																									
GDL 5XR										■																								
GEA 24(B)											■																							
GEA 110												■																						
GTP 59													■																					
Mag Compass														■																				
NAV Radio(s)															■																			
COM Radio(s)																■																		
Fuel Pump																	■																	
Pitot Heat																		■																
Pulse Light																			■															
Generator																				■														
Pos Lt																					■													
Anti-Coll Lt																						■												
Landing Lights																							■											
Gov RPM Incr/ Decr																								■										
Hyd System																									■									
Radio AGL																										■								
TAS/TCAS																											■							
Transponder																												■						
Audio Panel																													■					
Autopilot/SAS																														■				
GAP 26																															■			
GAD 27 Wig Wag																																■		
Dimmer																																	■	
Elec. Standby Inst.																																		■

Table 6-5 Blank EMI Victim/Source Matrix

		VICTIM																												
SOURCE																														
		■																												
			■																											
				■																										
					■																									
						■																								
							■																							
								■																						
									■																					
										■																				
											■																			
												■																		
													■																	
														■																
															■															
																■														
																	■													
																		■												
																			■											
																				■										
																					■									
																						■								
																							■							
																								■						
																									■					
																										■				
																											■			
																												■		
																													■	
																														■

6.13 AOA Calibration

AOA is the angle between the aircraft's wing and the oncoming airflow (refer to figure 6-3). As AOA increases, eventually it will reach a critical value (determined by the physical characteristics of the wing), whereupon the airflow will separate, the wing will stop producing lift, and the aircraft will stall. The critical value can vary with flap position, to compensate for this the AOA system can be calibrated twice, once with the flaps fully retracted, and once with the flaps fully deployed. The primary purpose of an AOA system is to monitor the wing's angle of attack and provide feedback to the pilot when the aircraft is approaching the critical AOA.

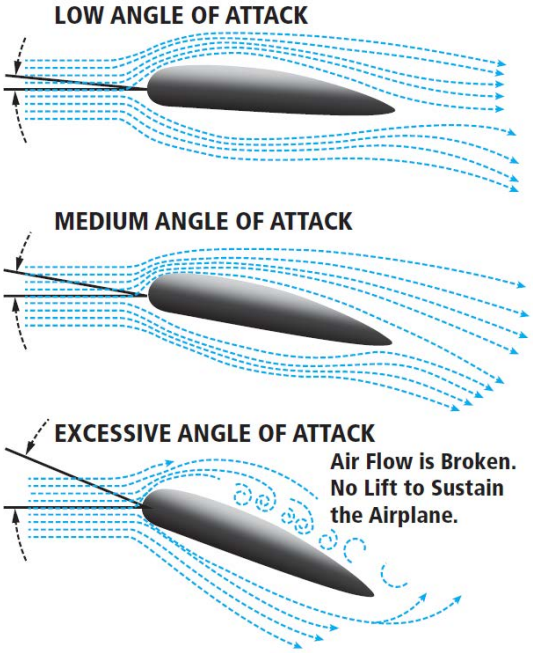

Figure 6-3 Angle of Attack (AOA) Illustration

6.13.1 AOA (Angle of Attack) Configuration

The AXIS system is capable of optionally supporting two AOA calibration curves. If using dual calibration curves, the installer will calibrate AOA once with the flaps fully retracted (Flaps Up Calibration curve), and once with the flaps fully deployed (Flaps Down Calibration curve). The system will only reference one of the calibration curves at a time, determined by the position of the flaps. As this function is dependent upon the system's knowledge of flap position, either a dedicated discrete input programmed to the FLAPS DOWN preset or the configuration of a flap position sensor is required.

NOTE

In the absence of a configured flap position sensor, or dedicated flaps down discrete input, only a single AOA calibration curve will be available.

If a discrete input is being used to determine flap position, the Flaps Down Calibration curve is referenced by the AOA indicator when the discrete input is active, and the Flaps Up Calibration curve is referenced when the discrete input is inactive.

If a flap position sensor is used, the system will use the Flaps Down Calibration curve when flaps are extended beyond the position corresponding to halfway between full flap extension and full flap retraction, or according to the Flap Position Threshold setting outlined below.

If for any reason, the flap position sensor information is not available to the system, due to a system fault or otherwise, the AXIS flight display will revert to referencing the Flaps Up Calibration curve and a CAS message will be annunciated to the pilot - AOA NO FLAPS.

Use the PFD tab of the Settings Application to modify the following options:

AOA Enable Above

Airspeed above which AOA information will appear to the pilot.

AOA Disable Below

Airspeed below which AOA information will be removed from display to the pilot.

AOA Transition Point

Determines the percentage of flap deployment at which the system will reference the appropriate flaps up/ flaps down curve. If the installer prefers the system to reference the flaps down curve before flaps reach half way deployed, they would lower the flap position threshold from the default 50% value.

NOTE

For systems that include a flap position sensor or Flaps Down discrete input, calibration of the Flaps Down Configuration curve is optional. If the Flaps Down Calibration curve is not completed, the Flaps Up Calibration curve will always be referenced, regardless of flap position. If an installer decides against calibrating the flaps down curve, it is important that all Flaps Down Calibration points are left uncalibrated.

6.13.2 AOA Calibration (Performed In-flight)

WARNING

AOA calibration involves flying the aircraft at low airspeeds and angles of attack at or near the stall point. Do not perform AOA calibration until the aircraft's stall recovery characteristics are well understood. Before AOA calibration, ensure that the aircraft is clear of all traffic and at a safe altitude for stall recovery

NOTE

Installer Mode must be enabled for the AOA In flight calibration menu to be available in normal mode. From any location in configuration mode, press the MENU key and toggle the Installer Mode setting to on.

AOA calibration must be performed when a GAP 26 is installed to enable AOA functionality. The AOA calibration is used to find the four AOA settings shown in figure 6-3. The calibration procedures may be repeated as necessary to fine-tune the behavior of the AOA gauge and audio alerting.

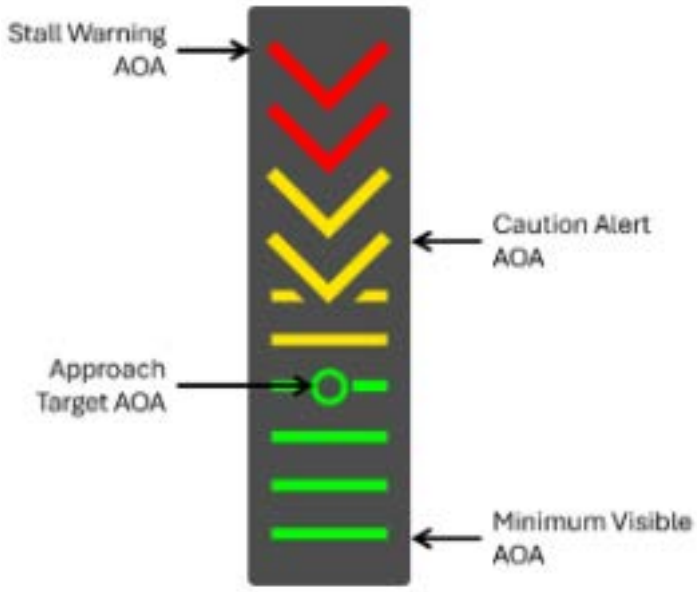

Figure 6-4 AOA Display

6.13.2.1 AOA Calibration Procedure (Normal Mode Only)

NOTE

For best results, perform all AOA calibrations in smooth air. Turbulence or rough air can affect the calibration.

NOTE

The calibration values displayed for the AOA calibration points are proportional to actual AOA (i.e., the greater the calibration value, the greater the AOA) but are not otherwise representative of any specific unit of measure.

To access the AOA Calibration menu perform the following:

1. While in-flight, press **MENU** key twice to open the main menu.
2. Touch **Settings & Tools** > **AOA**

NOTE

*If an AOA calibration has not yet been performed, the calibration fields will be blank. Alternatively, touch **Clear** to delete an existing AOA calibration.*

Three required calibration points (Minimum Visible AOA Calibration, Caution Alert AOA Calibration, Stall Warning AOA Calibration) are captured during the calibration procedure, in addition to one optional calibration (Approach Target AOA Calibration, if desired) point. It is recommended to capture each calibration point in the following sequence. Attempting to calibrate them out of order may result in a failed calibration.

Recommended Order of Calibration:

1. Minimum Visible AOA Calibration (Required)
2. Caution Alert AOA Calibration (Required)
3. Stall Warning AOA Calibration (Required)
4. Approach Target AOA Calibration (Optional)

For AOA calibration to be valid:

- The Stall Warning AOA calibration value must be greater than the Minimum Visible AOA calibration value.
- The Caution Alert AOA calibration value must be greater than the minimum visible AOA calibration value and less than the Stall Warning AOA calibration value.

6.13.2.2 Calibration Procedure for Aircraft with a Single AOA Calibration Curve

NOTE

Installers should use this procedure for aircraft that will only calibrate a single AOA calibration curve. If an installer intends to calibrate two AOA calibration curves, to compensate for flap position, use the procedure described in section 6.13.2.3.

6.13.2.2.1 Single Curve Minimum Visible AOA Calibration

The Minimum Visible AOA Calibration sets the AOA value for the bottom of the AOA gauge green arc (figure 6-4), which is also the AOA value at which the gauge will first appear on the PFD, when approaching from a relatively lower cruise angle of attack.

Capture this calibration point while flying the aircraft at an AOA somewhat higher than a normal cruise flight (1.5 times the stall speed (V_{SO}) is recommended) to avoid nuisance frequent appearances of the AOA gauge.

1. From the Angle of Attack menu, touch **Calibrate**.
2. Follow the on-screen instructions.
3. To begin, touch **Start**.
4. Follow the on-screen instructions.
5. When completed, touch **Done**.
6. Proceed to section 6.13.2.2.2.

NOTE

After calibrating all required AOA points, if the AOA display appears too frequently or not frequently enough, the Minimum Visible AOA calibration step should be repeated to set a new value.

6.13.2.2.2 Single Curve Caution Alert AOA Calibration

The Caution Alert AOA Calibration sets the AOA value for the bottom of the yellow chevron section of the AOA gauge (figure 6-4), which is also the AOA value at which the audible stall warning sound will begin to intermittently play.

Capture this calibration point while flying the aircraft at an AOA below the aircraft's stall AOA (1.1 times the stall speed (V_{SO}) is recommended).

1. From the Angle of Attack menu, touch **Calibrate**.
2. Follow the on-screen instructions.
3. To begin, touch **Start**.
4. Follow the on-screen instructions.
5. When completed, touch **Done**.
6. Proceed to section 6.13.2.2.3.

NOTE

After calibrating all required AOA points, if the AOA caution alert and audio warning occur too frequently or not frequently enough, the Caution Alert AOA calibration step should be repeated to set a new value.

6.13.2.2.3 Single Curve Stall Warning AOA Calibration

The Stall Warning AOA Calibration sets the AOA value for the top of the red chevron section of the AOA gauge (figure 6-4), which is also the AOA value at which the audible stall warning sound will play continuously (just before stall break is suggested).

1. From the Angle of Attack menu, touch **Calibrate**.
2. Follow the on-screen instructions.
3. To begin, touch **Start**.
4. Follow the on-screen instructions.
5. When completed, touch **Done**.
6. Repeat the Stall Warning AOA calibration using a different flap setting, if desired. The most conservative stall AOA calibration will be saved automatically.
7. If desired, proceed to section 6.13.2.2.4.

6.13.2.2.4 Single Curve Approach Target AOA Calibration (Optional)

The Approach Target AOA Calibration sets a specific point on the AOA gauge to use as the ideal target AOA for an approach (1.3 times stall speed (V_{SO}) is recommended). If calibrated, the Approach Target AOA will display as a green circle on the AOA gauge (figure 6-4). To be valid, the approach target AOA must be between the Minimum Visible (green) and Caution Alert (yellow chevron) AOA points.

Dependent upon configuration, audible AOA alerts may begin at this calibration point. Refer to section 5.4.8.4.

1. From the Angle of Attack menu, touch **Calibrate**.
2. Follow the on-screen instructions.
3. To begin, touch **Start**.
4. Follow the on-screen instructions.
5. When completed, touch **Done**.

6.13.2.3 Calibration Procedure For Aircraft With Dual AOA Calibration Curves

For aircraft with a Flaps Down Calibration Curve available, an identical set of the 4 previously described calibration points will be available under the Flaps Down calibration tab. These calibration points are optional, however if any one of them is calibrated, all 3 required calibration points (Minimum Visible AOA Calibration, Caution Alert AOA Calibration, Stall Warning AOA Calibration) must be completed. Approach Target AOA Calibration can optionally be completed for the Flaps Down configuration.

NOTE

For systems that include a flap position sensor or Flaps Down discrete input, calibration of the flaps down configuration curve is optional. If an installer decides against calibrating the Flaps Down Curve, it is important that all Flaps Down Calibration points are left uncalibrated. Use of the procedure outlined in section 6.13.2.2 is advised for these aircraft.

6.13.2.3.1 Flaps Retracted Minimum Visible AOA Calibration

The Minimum Visible AOA Calibration sets the AOA value for the bottom of the AOA gauge green arc (figure 6-4), which is also the AOA value at which the gauge will first appear on the PFD, when approaching from a relatively lower cruise angle of attack.

With flaps retracted, capture this calibration point while flying the aircraft at an AOA somewhat higher than a normal cruise flight (1.5 times the stall speed (V_{SO}) is recommended) to avoid nuisance frequent appearances of the AOA gauge.

1. From the Angle of Attack menu, touch the flaps up tab.
2. Touch **Calibrate**.
3. Follow the on-screen instructions.
4. To begin, touch **Start**.
5. Follow the on-screen instructions.
6. When completed, touch **Done**.
7. Proceed to section 6.13.2.3.2.

NOTE

After calibrating all required AOA points, if the AOA display appears too frequently or not frequently enough, the Minimum Visible AOA calibration step should be repeated to set a new value.

6.13.2.3.2 Flaps Retracted Caution AOA Calibration

The Caution Alert AOA Calibration sets the AOA value for the bottom of the yellow chevron section of the AOA gauge (figure 6-4), which is also the AOA value at which the audible stall warning sound will begin to intermittently play.

With flaps retracted, capture this calibration point while flying the aircraft at an AOA below the aircraft's stall AOA (1.1 times the stall speed (V_{SO}) is recommended).

1. From the Angle of Attack menu, touch the flaps up tab.
2. Touch **Calibrate**.
3. Follow the on-screen instructions.
4. To begin, touch **Start**.
5. Follow the on-screen instructions.
6. When completed, touch **Done**.
7. Proceed to section 6.13.2.3.3.

NOTE

After calibrating all required AOA points, if the AOA caution alert and audio warning occur too frequently or not frequently enough, the Caution Alert AOA calibration step should be repeated to set a new value.

6.13.2.3.3 Flaps Retracted Stall Warning AOA Calibration

The Stall Warning AOA Calibration sets the AOA value for the top of the red chevron section of the AOA gauge (refer to figure 6-4), which is also the AOA value at which the audible stall warning sound will play continuously (just before stall break is suggested).

1. From the Angle of Attack menu, touch the flaps up tab.
2. Touch **Calibrate**.
3. Follow the on-screen instructions, and then touch **Start** to begin the calibration.
4. Follow the on-screen instructions. Touch **Done** when completed.
5. If desired, proceed to section 6.13.2.3.4. If not desired, the AOA Calibration Procedure is complete.

6.13.2.3.4 Flaps Retracted Approach Target AOA Calibration (Optional)

The Approach Target AOA Calibration sets a specific point on the AOA gauge to use as the ideal target AOA for an approach (1.3 times stall speed (Vso) is recommended). If calibrated, the Approach Target AOA will display as a green circle on the AOA gauge (refer to figure 6-4). To be valid, the approach target AOA must be between the Minimum Visible (green) and Caution Alert (yellow chevron) AOA points.

Dependent upon configuration, audible AOA alerts may begin at this calibration point. Refer to section 5.4.8.4.

1. From the Angle of Attack menu, touch the flaps up tab
2. Touch **Calibrate**.
3. Follow the on-screen instructions.
4. To begin, touch **Start**.
5. Follow the on-screen instructions.
6. When completed, touch **Done**.

6.13.2.3.5 Flaps Extended Minimum Visible AOA Calibration

The Minimum Visible AOA Calibration sets the AOA value for the bottom of the AOA gauge green arc (figure 6-4), which is also the AOA value at which the gauge will first appear on the PFD, when approaching from a relatively lower cruise angle of attack.

With flaps extended, capture this calibration point while flying the aircraft at an AOA somewhat higher than a normal cruise flight (1.5 times the stall speed (V_{SO}) is recommended) to avoid nuisance frequent appearances of the AOA gauge.

1. From the Angle of Attack menu, touch the flaps down tab.
2. Touch **Calibrate**.
3. Follow the on-screen instructions.
4. To begin, touch **Start**.
5. Follow the on-screen instructions.
6. When completed, touch **Done**.
7. Proceed to section 6.13.2.3.6.

NOTE

After calibrating all required AOA points, if the AOA display appears too frequently or not frequently enough, the Minimum Visible AOA calibration step should be repeated to set a new value.

6.13.2.3.6 Flaps Extended Caution AOA Calibration

The Caution Alert AOA Calibration sets the AOA value for the bottom of the yellow chevron section of the AOA gauge (figure 6-4), which is also the AOA value at which the audible stall warning sound will begin to intermittently play.

With flaps extended, capture this calibration point while flying the aircraft at an AOA below the aircraft's stall AOA (1.1 times the stall speed (V_{SO}) is recommended).

1. From the Angle of Attack menu, touch the flaps down tab.
2. Touch **Calibrate**.
3. Follow the on-screen instructions
4. To begin, touch **Start**.
5. Follow the on-screen instructions.
6. When completed, touch **Done**.
7. Proceed to section 6.13.2.3.7.

NOTE

After calibrating all required AOA points, if the AOA caution alert and audio warning occur too frequently or not frequently enough, the Caution Alert AOA calibration step should be repeated to set a new value.

6.13.2.3.7 Flaps Extended Stall Warning AOA Calibration

The Stall Warning AOA Calibration sets the AOA value for the top of the red chevron section of the AOA gauge (figure 6-4), which is also the AOA value at which the audible stall warning sound will play continuously (just before stall break is suggested).

1. From the Angle of Attack menu, touch the flaps down tab.
2. Touch **Calibrate**.
3. Follow the on-screen instructions.
4. To begin, touch **Start**.
5. Follow the on-screen instructions.
6. When completed, touch **Done**.
7. If desired, proceed to section 6.13.2.3.8.

6.13.2.3.8 Flaps Extended Approach Target AOA Calibration (Optional)

The Approach Target AOA Calibration sets a specific point on the AOA gauge to use as the ideal target AOA for an approach (1.3 times stall speed (V_{SO}) is recommended). If calibrated, the Approach Target AOA will display as a green circle on the AOA gauge (figure 6-4). To be valid, the approach target AOA must be between the Minimum Visible (green) and Caution Alert (yellow chevron) AOA points.

Dependent upon configuration, audible AOA alerts may begin at this calibration point. Refer to section 5.4.8.4.

1. From the Angle of Attack menu, touch the flaps down tab.
2. Touch **Calibrate**.
3. Follow the on-screen instructions.
4. To begin, touch **Start**.
5. Follow the on-screen instructions.
6. When completed, touch **Done**.

6.14 Autopilot

6.14.1 Autopilot - On Ground Autopilot Check Out

WARNING

It is critical to satisfactorily complete the On Ground Autopilot Check Out procedure prior to engaging the autopilot during flight.

NOTE

The following post installation checkout must be followed after every completed installation. These steps should be followed when using a Garmin mounting kit or non-Garmin mounting parts to install the GSA 28.

After mounting the GSA 28, complete the following steps before completing the first flight with the GSA 28.

1. Verify the flight controls can move from stop to stop without binding or interference. Check the GSA 28 output mechanism and added linkage do not come in contact with any part of the airframe while traveling through its full range of motion.
   - If using a push rod linkage, verify the servo crank arm and push rod cannot experience an over-center condition when the flight controls are moved through their full range of travel. Refer to section 4.4.10 to verify complete servo push rod installation requirements.
   - Per figure 6-5 if using a bridle cable and capstan, verify the cable is wrapped around the capstan the required number of turns, the ball is in the center of travel when the flight controls are in the neutral position, and the ball cannot exit the capstan groove when the flight controls are moved through their full range of travel. Refer to section 4.4.10 to verify complete servo capstan installation requirements.

Figure 6-5 360º and 540º Cable Wrap Examples

2. Verify the travel of the flight controls is being limited by the airplane's primary stops and not the secondary stops provided by the GSA 28 stop bracket.
3. Make sure the structural integrity of the mounting bracket is adequate for the application and well secured to the airframe. Bracket deflection caused by normal servo loading and aircraft acceleration/vibration should be minimal. Also verify there are no cracks or sharp inside corners that could lead to fatigue failures.
4. Verify the fasteners used to mount the servo to the airframe are installed and have been tightened.

5. Make sure the CWS/DISCONNECT wire is correctly wired and tested.
6. If powering the servo through a pullable circuit breaker (recommended), make sure the circuit breaker is both accessible and easily identifiable to the pilot.
7. Repeat the procedure for all GSA 28 servos in the aircraft.

6.14.2 Autopilot - On-Ground Autopilot Set Up

6.14.2.1 Servo Wiring and Trim Motor and Autopilot Servo Direction Movement Verification

Servo Wiring Checkout

The first phase of setting up the Garmin autopilot system is to verify the proper wiring of the GSA 28 servos while on the ground.

1. Using the Device application, select *GFC 500X*. Verify all configured servos are properly communicating with the system.
2. Using the Device Application, select *GFC 500X*, and verify the CWS/Disconnect Input is properly wired for each servo.
   a. CWS/Disconnect Input should display “Low” when the autopilot disconnect key is pressed.
   b. CWS/Disconnect Input should display “Open” when the autopilot disconnect key is NOT pressed.
   c. The system will compare the CWS/Disconnect input from all servos, touch and hold the autopilot disconnect key for at least 5 seconds to verify there are no SYNC faults.
3. Using the Device application, verify the proper Trim Activity is displayed if the Roll servo is connected to an auxiliary trim motor.
   a. Center the aileron trim switch to input no TRIM command. Verify the aileron trim motor is not moving. Verify that Trim Activity for the Roll servo is properly displaying “-” for no activity.
   b. Use the aileron trim switch to input a roll right TRIM command. Verify the aileron trim motor properly moves for roll right trim. Verify that Trim Activity for the Roll servo is properly displaying “Roll Right.”
   c. Use the aileron trim switch to input a roll left TRIM command. Verify the aileron trim motor properly moves for roll left trim. Verify that Trim Activity for the Roll servo is properly displaying “Roll Left.”
   d. If the aileron trim response is reversed, use the Roll Trim tab in the Autopilot application and change the Roll Trim Motor Direction to Reverse, then repeat step all of step 3.
   e. Using the Autopilot Application, select the Roll Trim Tab. Enable **Roll Trim Motor Control**. Touch **Roll Trim Movement Test**. Use the Roll Left and Roll Right keys to verify the electric trim motor responds in the proper directions. Disable **Roll Trim Motor Control** after verification is complete.
4. Using the Device application, verify the proper Trim Activity is displayed if the Pitch servo is connected to an auxiliary trim motor.
   a. Center the elevator trim switch to input no Trim command. Verify the elevator trim motor is not moving. Verify that Trim Activity for the Pitch servo is properly displaying “-” for no activity.
   b. Use the elevator trim switch to input a nose up Trim command. Verify the elevator trim motor properly moves for nose up trim. Verify the Trim Activity for the Pitch servo is properly indicating *Nose Up*.

c. Use the elevator trim switch to input a nose down Trim command. Verify the elevator trim motor properly moves for nose down trim. Verify the Trim Activity for the Pitch servo is properly indicating *Nose Down*.

d. If the elevator trim response is reversed, use the Pitch Trim tab in the Autopilot application and change the Pitch Trim Motor Direction to Reverse, then repeat step all of step 4.

e. Using the Autopilot Application, select the Pitch Trim Tab. Enable **Pitch Trim Motor Control**. Touch **Pitch Trim Movement Test.** Use the Nose Up and Nose Down keys to verify the electric trim motor responds in the proper directions. Disable **Pitch Trim Motor Control** after verification is complete.

5. Using the Device application, verify the proper Trim Activity is displayed if the Yaw servo is connected to an auxiliary trim motor.

   a. Center the aircraft rudder trim switch to input no Trim command. Verify the rudder trim motor is not moving. Verify that Trim Activity for the Yaw servo is properly displaying "-" for no trim activity.

   b. Use the rudder trim switch to input a yaw right Trim command. Verify the rudder trim motor properly moves for yaw left trim. Verify the Trim Activity for the Yaw servo is properly indicating *Yaw Right*.

   c. Use the rudder trim switch to input a yaw left Trim command. Verify the rudder trim motor properly moves for yaw left trim. Verify the Trim Activity for the Yaw servo is properly indicating *Yaw Left*.

   d. If the rudder trim response is reversed, use the Yaw Trim tab in the Autopilot application and change the Yaw Trim Motor Direction to *Reverse*, then repeat step all of step 5.

   e. Using the Autopilot Application, select the Yaw Trim Tab. Enable **Yaw Trim Motor Control.** Touch **Yaw Trim Movement Test**. Use the Yaw Left and Yaw Right keys to verify the electric trim motor responds in the proper directions. Disable **Yaw Trim Motor Control** after verification is complete.

6. Go to the Autopilot application and navigate to the Roll Tab to configure the servo direction.

   a. When Servo Direction is set to Normal, the servo arm will move clockwise to cause a bank left aileron movement and the servo arm will move counterclockwise to cause a bank right aileron movement.

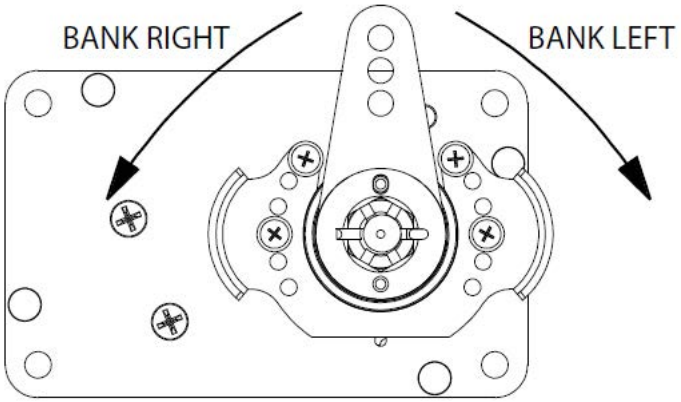

Figure 6-6 Normal Roll Servo Direction

b. When Servo Direction is set to Reverse, the servo arm will move clockwise to cause a bank right aileron movement and the servo arm will move counterclockwise to cause a bank left aileron movement.

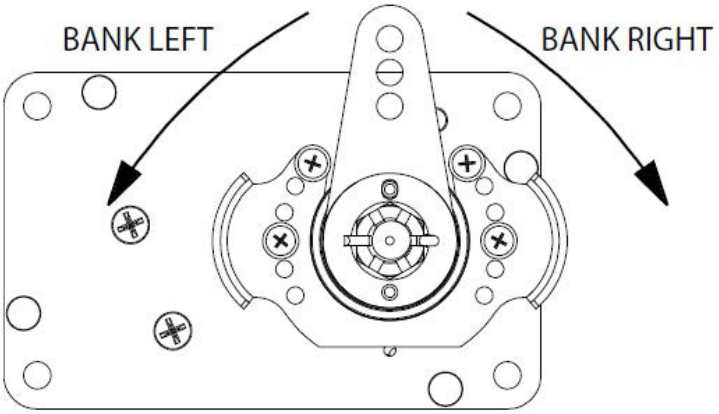

Figure 6-7 Reverse Roll Servo Direction

7. Go to the Autopilot application and navigate to the Pitch Tab to configure the servo direction.
   a. When Servo Direction is set to Normal, the servo arm will move clockwise to cause a nose down elevator movement and the servo arm will move counterclockwise to cause a nose up elevator movement.

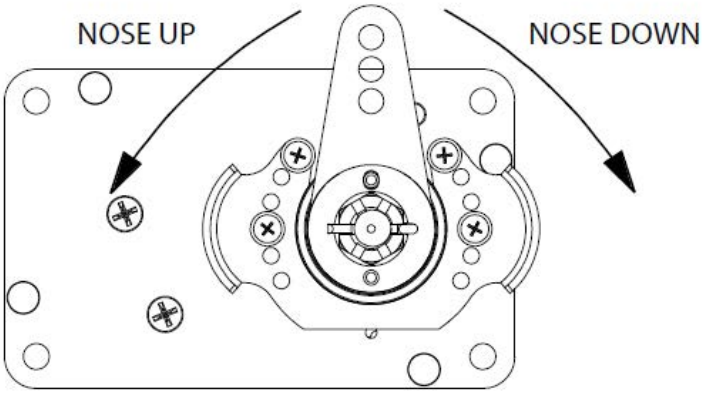

Figure 6-8 Normal Pitch Servo Direction

b. When Servo Direction is set to Reverse, the servo arm will move clockwise to cause a nose up elevator movement and the servo arm will move counterclockwise to cause a nose down elevator movement.

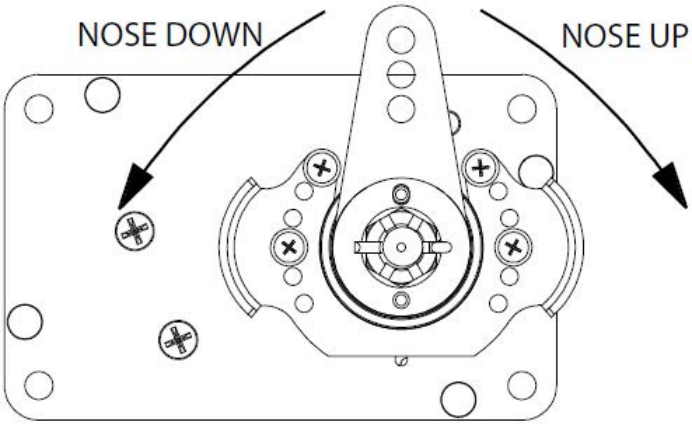

Figure 6-9 Reverse Pitch Servo Direction

8. Go to the Autopilot application and navigate to the Yaw Damper Tab to configure the servo direction.
   a. When Servo Direction is set to Normal, the servo arm will move clockwise to cause a nose left rudder movement and the servo arm will move counterclockwise to cause a nose right rudder movement.

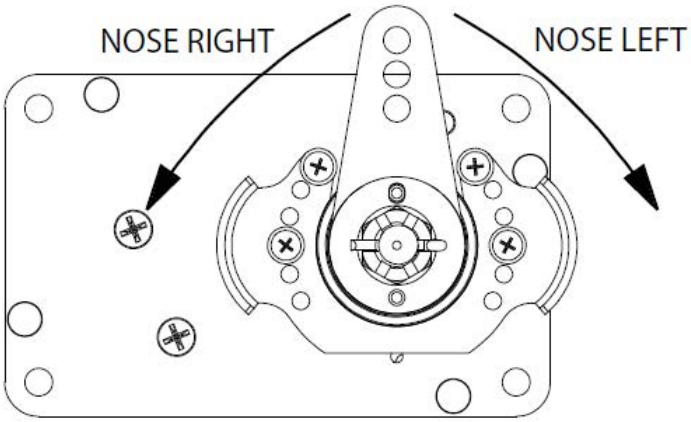

Figure 6-10 Normal Yaw Damper Servo Direction

   b. When Servo Direction is set to Reverse, the servo arm will move clockwise to cause a nose right rudder movement and the servo arm will move counterclockwise to cause a nose left rudder movement.

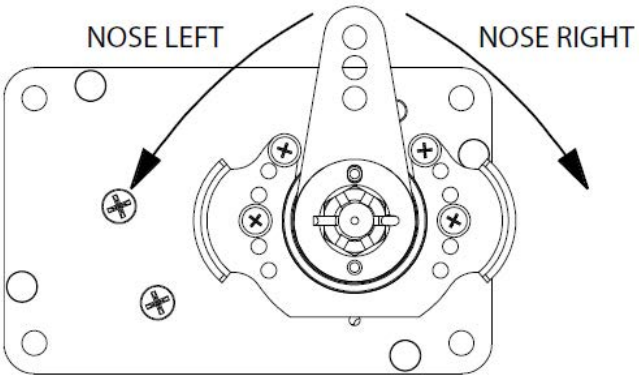

Figure 6-11 Reverse Yaw Servo Direction

9. The GSA 28 pitch servo has a configurable minimum and maximum airspeed limit. Use the Pitch Servo Tab of the Autopilot application to set the proper min/max airspeed limits for the pitch servo.
    a. The minimum airspeed limit determines the lowest airspeed the pitch servo will allow the aircraft to fly. If the speed drops below this limit, the pitch servo will lower the nose of the aircraft to keep the airspeed at or above the Minimum Airspeed Limit. The Minimum Airspeed Limit should be set above the aircraft stall speed with some margin.
    b. The maximum airspeed limit determines the fastest airspeed the pitch servo will allow the aircraft to fly. If the speed rises above this limit, the pitch servo will raise the nose of the aircraft to keep the airspeed at or below the Maximum Airspeed Limit. The Maximum Airspeed Limit should be set below the aircraft maximum speed with some margin.

6.14.3 Autopilot - On-Ground Autopilot Verification and Torque Set up

The next phase of setting up the Garmin autopilot system is to verify the proper functionality of the autopilot system on the ground in normal mode. This phase of the checkout requires a valid aircraft heading and pitch output from the ADAHRS. This means the post installation procedures must have already been completed on the ADAHRS before performing the on ground autopilot normal mode checkout.

NOTE

The following procedure can be performed using either the GMC Mode Controller controls or the available mode controls on the AP control page of the PFD.

1. Leave the autopilot disengaged and verify the controls can be manipulated smoothly with no control system binding.
2. Engage the autopilot and verify it properly disconnects with a short press and release of the CWS/ DISCONNECT key.
   a. If the audio output of the AXIS flight display system is connected to the aircraft audio system, verify the pilot hears an autopilot disconnect tone when disconnecting the autopilot.
3. Press the AP key to engage the autopilot in ROLL and PITCH modes, then press HDG to engage HDG mode laterally.
4. Command a nose down, left bank (per the following).
   a. Press the Heading knob on the PFD to center the HDG bug.
   b. Turn the Heading knob on the PFD counter-clockwise to command a left turn.
   c. Use the Nose Down key or the wheel on the GMC Mode Controller to command a pitch down.
5. Verify the stick properly moves in a direction that would cause the aircraft to pitch down and roll to the left smoothly with no control system binding.
   a. Press the AP key to disconnect the autopilot when verification is complete.
   b. If the stick position does not move in the correct direction, correct the roll and pitch servo directions documented in Servo Wiring Checkout step 6 and step 7.

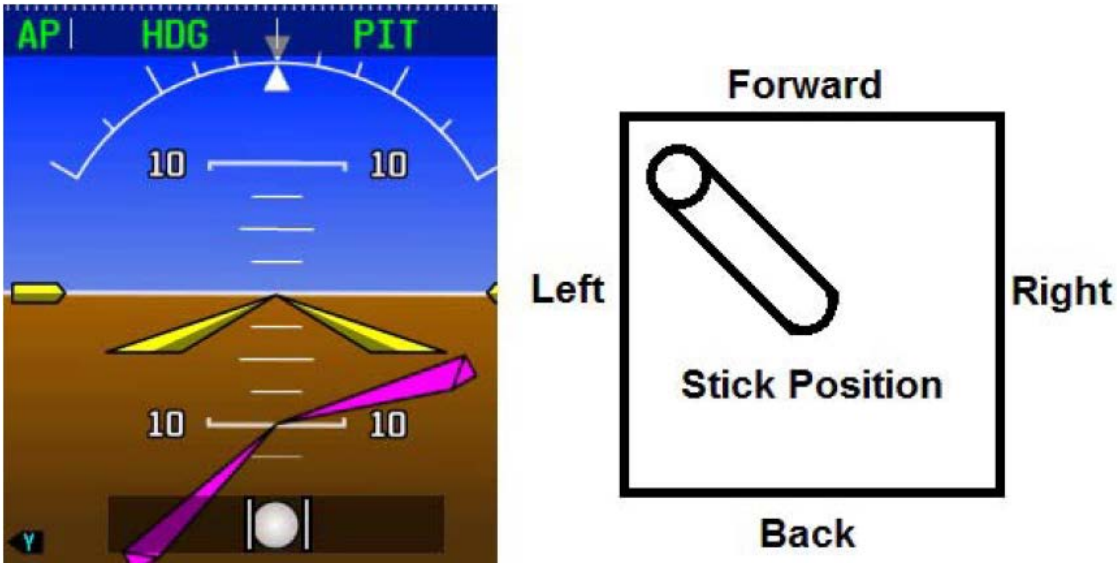

Figure 6-12 Nose Down, Left Bank

6. Press the AP key to engage the autopilot in ROL/PIT modes, then press HDG to engage HDG mode laterally.
7. Command a nose down, right bank (per the following).
   a. Press the Heading knob on the PFD to center the HDG bug.
   b. Turn the Heading knob on the PFD clockwise to command a right turn.
   c. Use the Nose Down key or the wheel on the GMC Mode Controller to command a pitch down.
8. Verify the stick properly moves toward the nose and toward the right wing smoothly with no control system binding
   a. Press the AP key to disconnect the autopilot when verification is complete.
   b. If the stick position does not move in the correct direction, correct the roll and pitch servo directions documented in Servo Wiring Checkout step 6 and step 7.

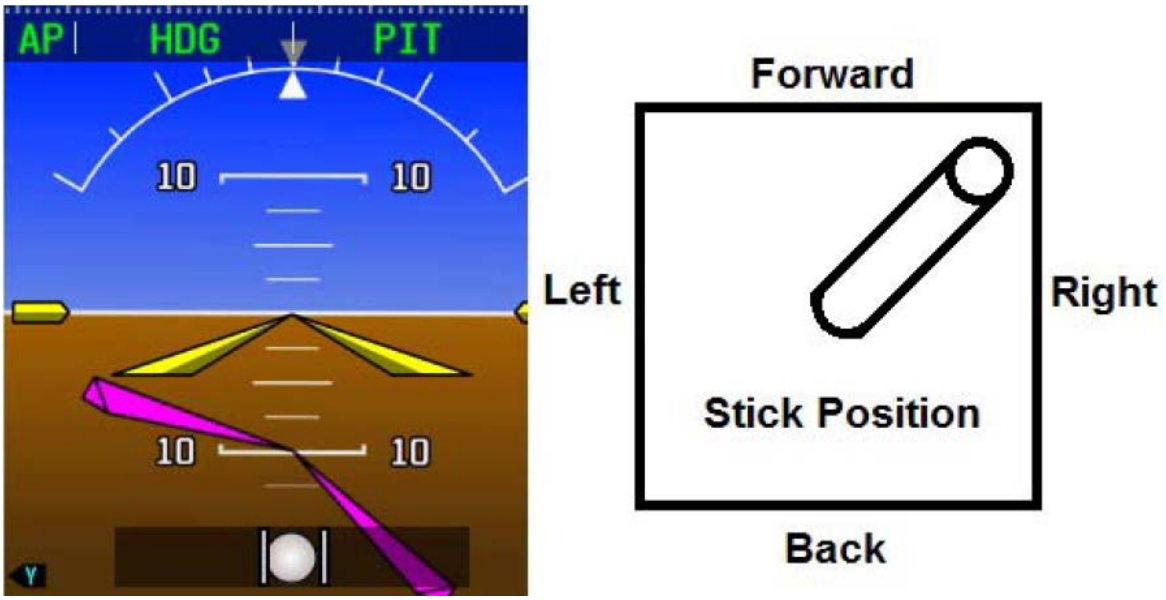

Figure 6-13 Nose Down, Right Bank

9. Press the AP key to engage the autopilot in ROL/PIT modes, then press HDG to engage HDG mode laterally.
10. Command a nose up, right bank per the following:
    a. Press the Heading knob on the PFD to center the HDG bug.
    b. Turn the Heading knob on the PFD clockwise to command a right turn.
    c. Use the Nose Up key or the wheel on the GMC Mode Controller to command a pitch up.

11. Verify the stick properly moves toward the tail and toward the right wing smoothly with no control system binding.
    a. Press the AP key to disconnect the autopilot when verification is complete.
    b. If the stick position does not move in the correct direction, correct the roll and pitch servo directions documented in Servo Wiring Checkout step 6 and step 7.

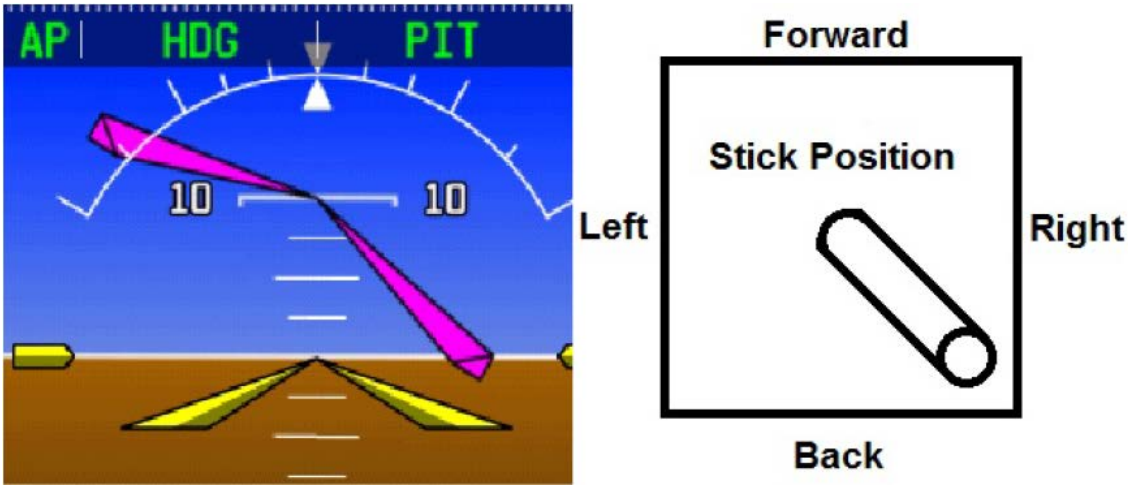

Figure 6-14 Nose Up, Right Bank

12. Press the AP key to engage the autopilot in ROL/PIT modes, then press HDG to engage HDG mode laterally.
13. Command a nose up, left bank per the following:
    a. Press the Heading knob on the PFD to center the HDG bug.
    b. Turn the Heading knob on the PFD counter-clockwise to command a left turn.
    c. Use the Nose Up key or the wheel on the GMC Mode Controller to command a pitch up.
14. Verify the stick properly moves toward the tail and toward the left wing smoothly with no control system binding.
    a. Press the AP key to disconnect the autopilot when verification is complete.
    b. If the stick position does not move in the correct direction, correct the roll and pitch servo directions documented in Servo Wiring Checkout step 6 and step 7.

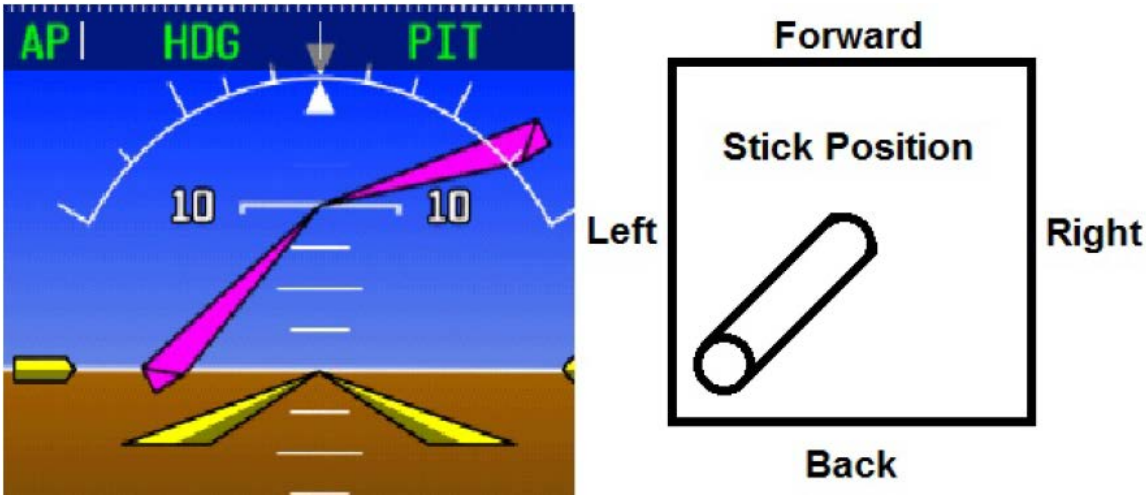

Figure 6-15 Nose Up, Left Bank

15. The GSA 28 servo has a configurable maximum torque setting. This determines how much torque the servo will output before the electronic slip clutch begins to slip. The Max Torque setting can be adjusted from 10 to 60 inch-pounds. Engage the autopilot and verify it can be overpowered in both the pitch and roll axis. The servo torque should be set high enough to not slip during in flight air loading, but the torque setting should be low enough for the pilot to override the autopilot if required. If the autopilot cannot be overpowered, use the Autopilot Setup screen to reduce the Maximum Torques setting for the associated servo.
    a. Press the MENU key two times on the GDU to enter the MAIN MENU page.
    b. Select Settings and Tools
    c. Select Autopilot
    d. Select the Roll Axis Tab and set the Max Torque.
    e. Select the Pitch Axis Tab and set the Max Torque.

6.14.4 Autopilot - On-Ground Yaw Damper Verification and Torque Set Up

The next phase of setting up the Garmin autopilot system is to verify the proper functionality of the yaw damper system on the ground in normal mode. This phase of the checkout requires a valid output from the ADAHRS. This means the post installation procedures must have been completed on the ADAHRS before performing the on ground autopilot normal mode checkout.

1. Leave the yaw damper disengaged and verify the rudder pedals can be manipulated smoothly with no control system binding.
2. The CWS/DISCONNECT input can optionally be connected to the Yaw Damper. If this connection was made, engage the yaw damper and verify that is properly disconnects with a short touch the CWS/DISCONNECT key.
   a. If the audio output of the AXIS flight display is connected to the aircraft audio system, verify the pilot hears an autopilot disconnect tone when disconnecting the autopilot.
3. Press the **YD** key on the AFCS control page of the PFD.
   a. With a GMC Mode Controller:
      i. Press the **YD** key on the GMC Mode Controller.
4. Verify the rudder properly moves to the correct direction by standing by the tail of the aircraft, facing the vertical stabilizer, and pushing on the fuselage. The rudder should move AWAY from you (the rudder should move in the same direction the rear fuselage is moving):

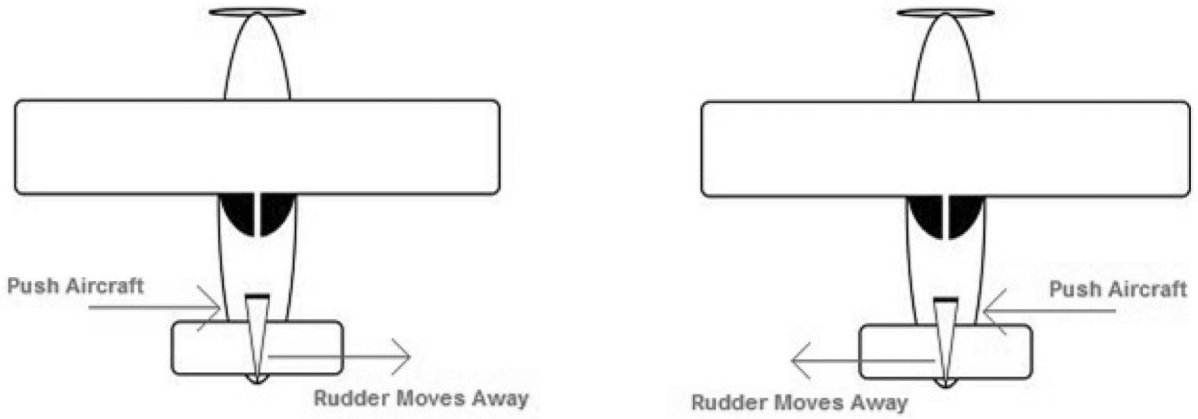

   a. If the rudder does not move the correct direction, correct the yaw servo direction documented in Servo Wiring Checkout step 8.
5. Engage the yaw damper and verify it can be overpowered in yaw axis using rudder pedal inputs. If the autopilot cannot be overpowered, use the Autopilot Setup screen to reduce the MAX TORQUE setting for the yaw damper servo:
   a. Press the **MENU** key two times on the GDU to enter the MAIN MENU page.
   b. Select **Settings and Tools**.
   c. Select **Autopilot**.
   d. Select the Yaw Axis tab and set the Max Torque.

6.14.5 Autopilot In-Air Setup

The next phase of setting up the Garmin autopilot system is to verify and tune the proper functionality of the autopilot system in the air. Complete this procedure by following the instructions in appendix D.

WARNING

This stage of the flight test involves allowing the GSA 28 autopilot servos to manipulate the flight control surfaces of the aircraft. Extreme caution should be used during the initial engagement of the autopilot system. The pilot should always have easy access to the autopilot disconnect key to disconnect the autopilot and take control of the aircraft at anytime.

APPENDIX A CONNECTORS AND PIN FUNCTIONS

A.1 AXIS Flight Display A-4
A.1.1 J1011 ..... A-7
A.1.2 J1012 ..... A-8
A.1.3 J1013 ..... A-10
A.1.4 J1015 ..... A-12
A.1.5 Functional Descriptions A-14
A.2 GSU 25 (AHRS/Air Data Sensor Unit) A-29
A.2.1 GSU 25 ..... A-29
A.2.2 Serial Data A-31
A.2.3 Temperature Inputs A-32
A.2.4 Unit ID A-32
A.2.5 Aircraft Power A-33
A.3 GTP 59 (Temperature Probe) A-34
A.4 GMU 11 (Magnetometer) A-35
A.4.1 Power Function A-36
A.5 GMU 44(B) A-37
A.6 GMU 22/44 ..... A-38
A.6.1 J441 Connector A-38
A.6.2 Power Function A-39
A.6.3 Serial Data A-39
A.7 GEA 24 (EIS Interface) A-40
A.7.1 GEA 24 ..... A-40
A.7.2 J241 Connector A-42
A.7.3 J242 Connector A-43
A.7.4 J243 Connector A-45
A.7.5 Aircraft Power A-47
A.7.6 CAN Bus A-47
A.7.7 RS-232 ..... A-47
A.7.8 Digital Inputs A-48
A.7.9 Discrete Inputs A-49
A.7.10 Discrete Outputs A-50
A.7.11 Fuel Quantity A-51
A.7.12 GP Inputs A-52
A.7.13 Pressure Inputs A-53
A.7.14 Voltage Inputs A-53
A.7.15 Shunt A-53
A.7.16 System ID A-54
A.7.17 Temperature Inputs A-55
A.7.18 Transducer Output Power A-56
A.8 GMC 507 (AFCS Mode Controller) A-57
A.8.1 J5701 Connector A-57
A.8.2 Power A-58
A.8.3 CAN Bus A-58
A.8.4 Lighting A-58
A.8.5 TO/GA Discrete In A-59
A.8.6 Unit ID A-59
A.9 GSA 28 (Autopilot Servo) A-60
A.9.1 J281 Connector A-60

A.9.2 Power Function A-61
A.9.3 CWS/Disconnect A-61
A.9.4 CAN Bus A-61
A.9.5 ID Strap A-61
A.9.6 RS-232 ..... A-62
A.9.7 Trim A-62
A.10 GAD 27 (Flaps/Lights/Trim Controller) A-63
A.10.1 J271 Connector A-63
A.10.2 J272 Connector A-65
A.10.3 Terminal Block (TB273) Connector A-66
A.10.4 Power A-67
A.10.5 CAN Bus A-67
A.10.6 Discrete Inputs A-67
A.10.7 Flap Inputs A-68
A.10.8 Lighting Bus A-69
A.10.9 External Lighting Discrete Inputs A-70
A.10.10 Motor Disconnect Input A-70
A.10.11 Pitch Trim Inputs A-71
A.10.12 Roll Trim Inputs A-71
A.10.13 Yaw Trim Inputs A-71
A.11 GAD 29/29B/29C/29D (ARINC 429 Adapter) A-72
A.11.1 J291 Connector A-72
A.11.2 J292 Connector A-73
A.11.3 Power A-74
A.11.4 ARINC 429 In/Out A-74
A.11.5 CAN Bus A-75
A.12 GAP 26 ..... A-76
A.13 GHA 15 Height Advisor A-76
A.13.1 J2001 ..... A-76
A.13.2 Power Functions A-77
A.13.3 CAN Bus A-77
A.13.4 USB A-77
A.14 GI 260 (AOA Indicator) A-78
A.14.1 Pigtail Connections A-78
A.14.2 Power A-78
A.14.3 CAN Bus A-78
A.14.4 RS-232 CHANNEL A-78
A.14.5 Lighting A-79
A.15 GSU 75 ..... A-79
A.16 GEA 110 ..... A-82
A.16.1 J1101 Connector A-83
A.16.2 J1102 Connector A-84
A.16.3 Power Pins A-86
A.16.4 Configuration Module Pins A-86
A.16.5 Analog Inputs A-87
A.16.6 Digital Inputs A-88
A.16.7 Analog/CCS Inputs A-88
A.16.8 Analog/CCS/Digital Inputs A-88
A.16.9 Shunt Inputs A-89
A.16.10 Discrete Outputs A-89

A.16.11 Configurable Discrete Inputs A-89
A.16.12 RS-485 Channels A-90
A.16.13 Transducer Power Out Pins A-90
A.16.14 GEA System ID A-90
A.17 GTR 20 (VHF Communications Radio) A-91
A.17.1 J2001 Connector A-91
A.17.2 Power A-93
A.17.3 CAN Bus A-93
A.17.4 Unit ID A-93
A.17.5 MIC Audio A-93
A.17.6 Aux Mono Audio A-94
A.17.7 Headset Audio A-94
A.17.8 Music Inputs A-94
A.17.9 Receiver Audio A-95
A.17.10 Pilot/Copilot PTT Inputs A-95
A.17.11 TX Interlock A-96
A.17.12 Discrete Inputs A-96
A.18 GCO 14 ..... A-97
A.19 GDL 52R A-98
A.20 GTR 205R(x) A-99
A.20.1 Functional Descriptions A-102

A.1 AXIS Flight Display

The AXIS flight display mating designators, part numbers, and associated connector kits are listed below for each variant of the display.

Table A-1 GDU 116B Mating Connectors

Ref. Des.	Description	Connector P/N	Kit P/N
J1011	Conn, Female, SD D-Sub, 9 Ckt	330-00184-09	011-06935-20
J1012	Conn, Female, SD D-Sub, 50 Ckt	330-00184-50	
GPS	BNC, Male	Supplied with antenna	
HDMI	HDMI, Male		

Table A-2 GDU 116C Mating Connectors

Ref. Des.	Description	Connector P/N	Kit P/N
J1011	Conn, Female, SD D-Sub, 9 Ckt	330-00184-09	011-06935-40
J1012	Conn, Female, SD D-Sub, 50 Ckt	330-00184-50	
J1013	Conn, Male, HD D-Sub, 62 Ckt	330-00185-62	
J1015	Conn, Male, SD D-Sub, 50 Ckt	330-00186-50	
GPS	TNC, Male	Supplied with antenna	
COM	BNC, Male	Supplied with antenna	
HDMI	HDMI, Male		

Table A-3 GDU 116NC Mating Connectors

Ref. Des.	Description	Connector P/N	Kit P/N
J1011	Conn, Female, SD D-Sub, 9 Ckt	330-00184-09	011-06935-40
J1012	Conn, Female, SD D-Sub, 50 Ckt	330-00184-50	
J1013	Conn, Male, HD D-Sub, 62 Ckt	330-00185-62	
J1015	Conn, Male, SD D-Sub, 50 Ckt	330-00186-50	
GPS	TNC, Male	Supplied with antenna	
COM	BNC, Male	Supplied with antenna	
NAV	BNC, Male	Supplied with antenna	
HDMI	HDMI, Male		

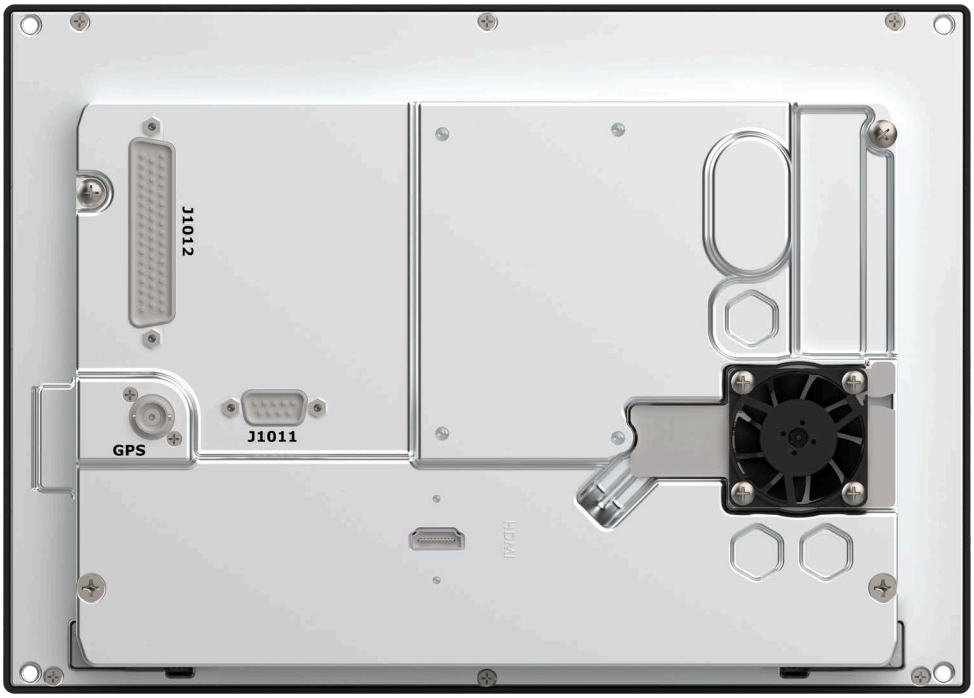

Figure A-1 GDU 116B Unit View (Back with Connectors)

Figure A-2 GDU 116C Unit View (Back with Connectors)

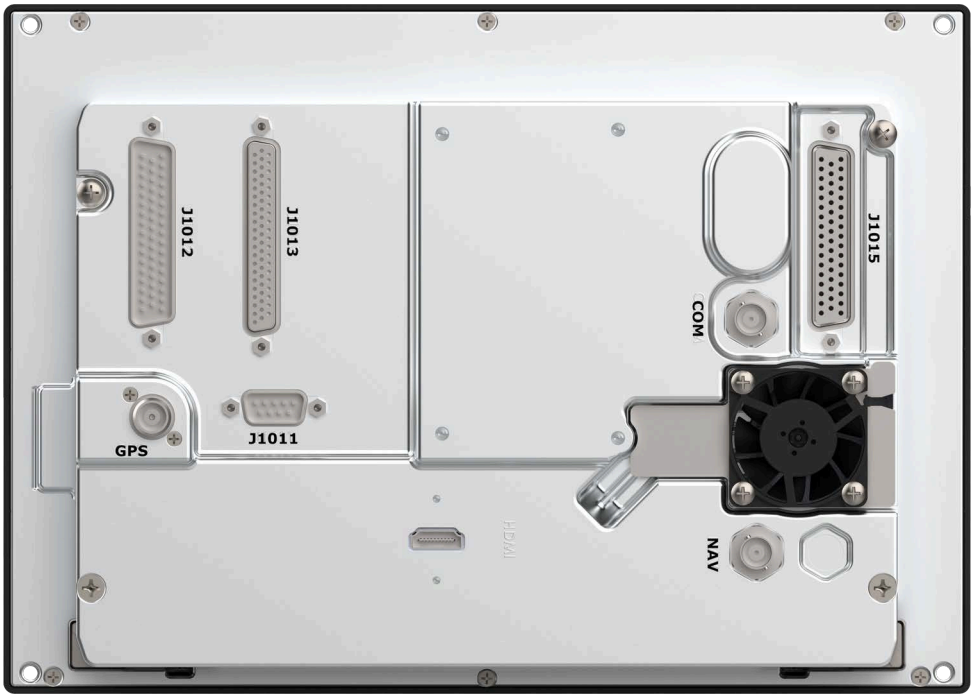

Figure A-3 GDU 116NC Unit View (Back with Connectors)

A.1.1 J1011

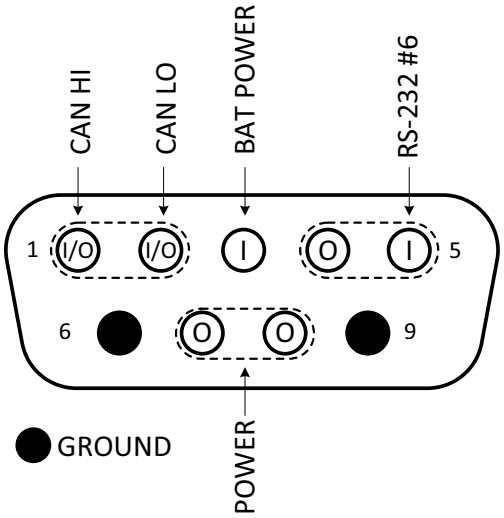

Figure A-4 GDU 116B/C/NC J1011 Connector
As Viewed Looking at Rear of Unit (Pin 1 is Top Left)

Table A-4 GDU 116B/C/NC J1011 Connector

Pin	Pin Name	I/O
1	CAN HI	I/O
2	CAN LO	I/O
3	BAT POWER	IN
4	RS-232 OUT 6	OUT
5	RS-232 IN 6	IN
6	GROUND	--
7	POWER OUT	OUT
8	POWER OUT	OUT
9	GROUND	--

A.1.2 J1012

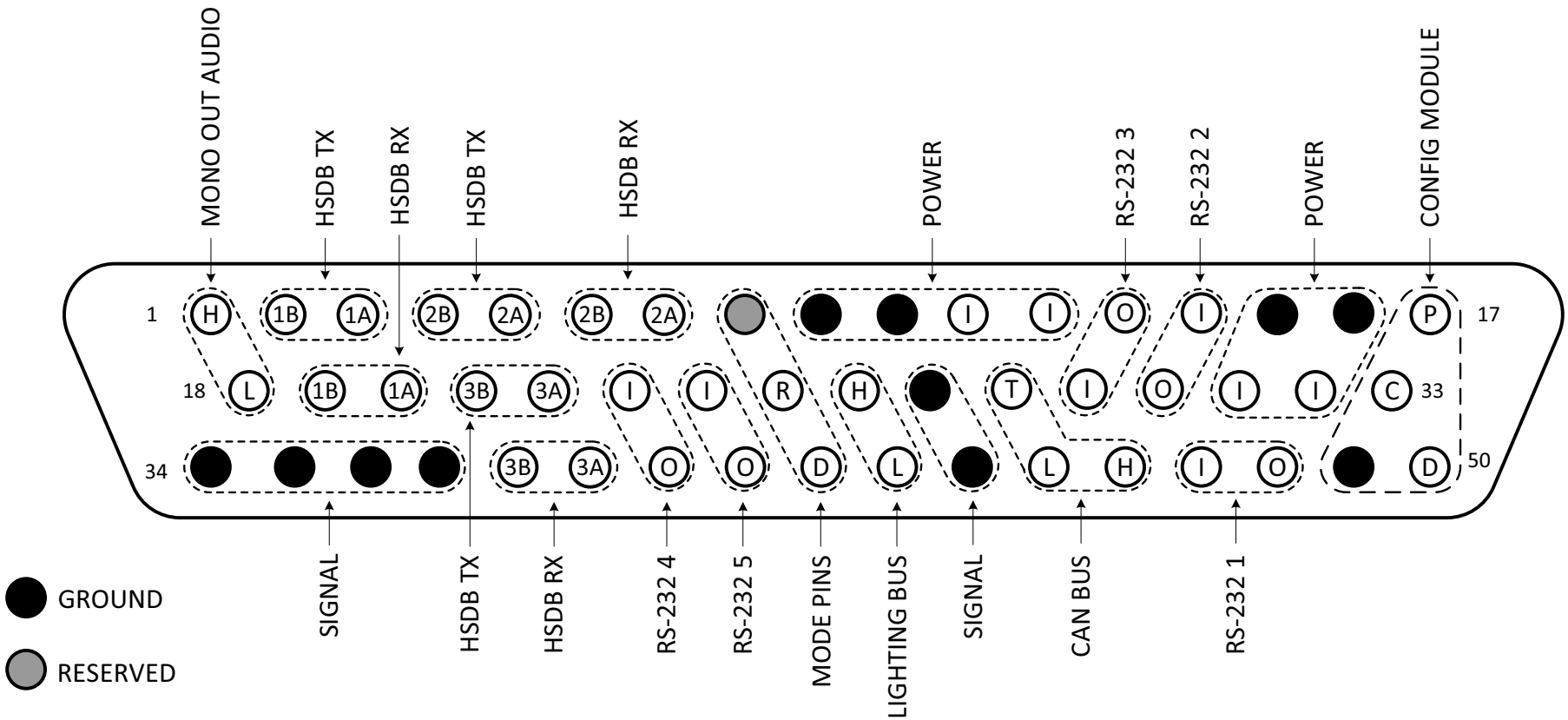

Figure A-5 GDU 116B/C/NC J1012 Connector
As Viewed Looking at Rear of Unit (Pin 1 is Top Left)

Table A-5 GDU 116B/C/NC J1012 Connector

Pin	Pin Name	I/O	Pin	Pin Name	I/O
1	MONO AUDIO OUT HI	OUT	26	LIGHTING BUS #1	IN
2	HSDB TX 1B	OUT	27	SIGNAL GROUND	--
3	HSDB TX 1A	OUT	28	CAN BUS TERM	I/O
4	HSDB TX 2B	OUT	29	RS-232 IN 3	IN
5	HSDB TX 2A	OUT	30	RS-232 OUT 2	OUT
6	HSDB RX 2B	IN	31	POWER INPUT	IN
7	HSDB RX 2A	IN	32	POWER INPUT	IN
8	RESERVED	--	33	CONFIG MODULE CLOCK	OUT
9	POWER GROUND	--	34	RS-232 SIGNAL GROUND 1	--
10	POWER GROUND	I/O	35	RS-232 SIGNAL GROUND 2	--
11	POWER INPUT	IN	36	RS-232 SIGNAL GROUND 3	--
12	POWER INPUT	IN	37	RS-232 SIGNAL GROUND 4	--
13	RS-232 OUT 3	OUT	38	HSDB RX 3B	IN
14	RS-232 IN 2	IN	39	HSDB RX 3A	IN
15	POWER GROUND	--	40	RS-232 OUT 4	OUT
16	POWER GROUND	--	41	RS-232 OUT 5	OUT
17	CONFIG MODULE POWER OUT	OUT	42	DEMO MODE	IN
18	AUDIO MONO OUT LO	OUT	43	LIGHTING BUS #2	IN
19	HSDB RX 1B	IN	44	RS-232 SIGNAL GROUND 5	--
20	HSDB RX 1A	IN	45	CAN LO	I/O
21	HSDB TX 3B	OUT	46	CAN HI	I/O
22	HSDB TX 3A	OUT	47	RS-232 IN 1	IN
23	RS-232 IN 4	IN	48	RS-232 OUT 1	OUT
24	RS-232 IN 5	IN	49	CONFIG MODULE GROUND	--
25	REVERSIONARY MODE	IN	50	CONFIG MODULE DATA	I/O

A.1.3 J1013

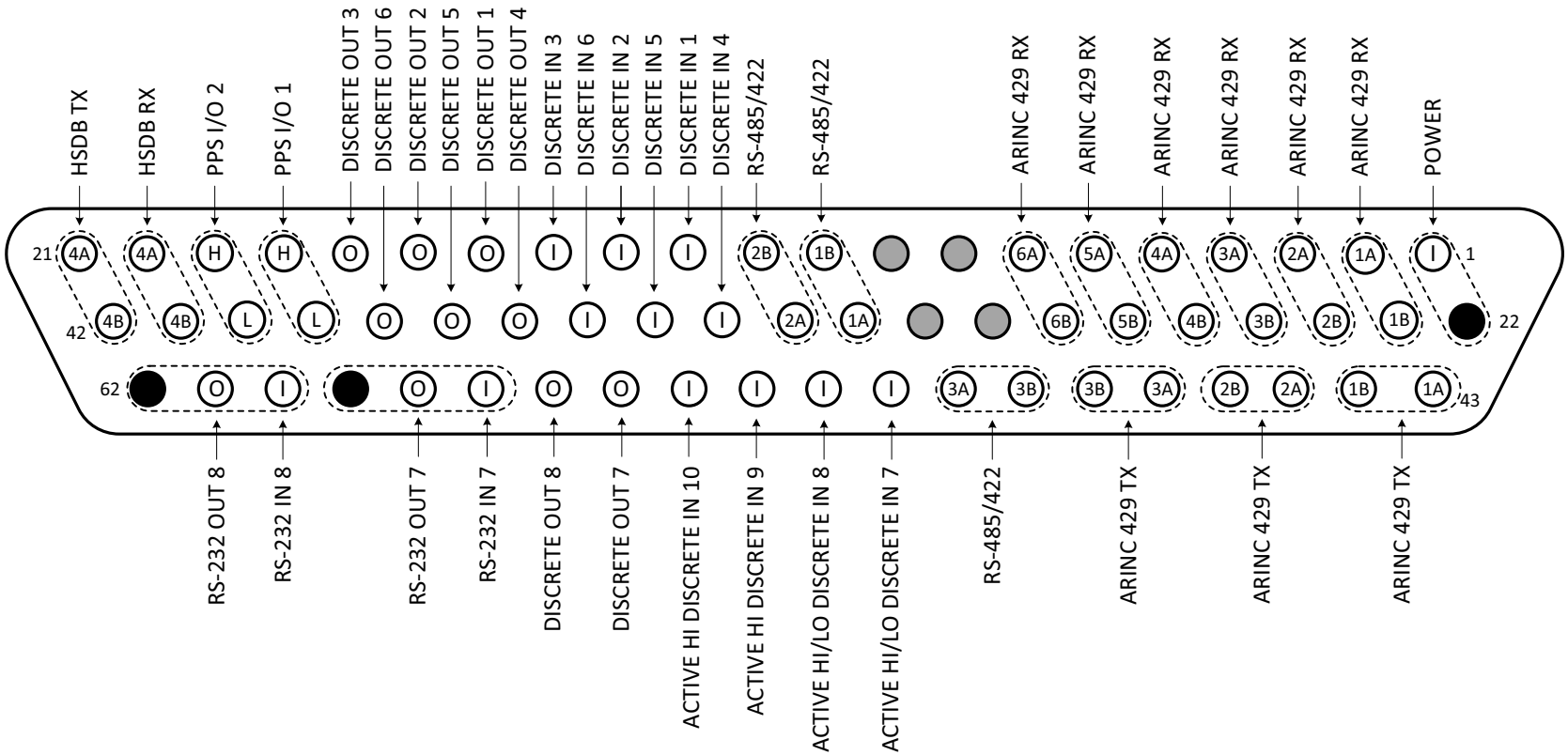

Figure A-6 GDU 116C/NC J1013 Connector
As Viewed Looking at Rear of Unit (Pin 1 is Top Right)

Table A-6 GDU 116C/NC J1013 Connector

Pin	Pin Name	I/O
1	POWER INPUT	IN
2	ARINC 429 IN 1A	IN
3	ARINC 429 IN 2A	IN
4	ARINC 429 IN 3A	IN
5	ARINC 429 IN 4A	IN
6	ARINC 429 IN 5A	IN
7	ARINC 429 IN 6A	IN
8	RESERVED	--
9	RESERVED	--
10	RS-485/422 1B	I/O
11	RS-485/422 2B	I/O
12	DISCRETE IN 1*	IN
13	DISCRETE IN 2*	IN
14	DISCRETE IN 3*	IN
15	DISCRETE OUT 1	OUT
16	DISCRETE OUT 2	OUT
17	DISCRETE OUT 3	OUT
18	PPS I/O 1 HI	I/O
19	PPS I/O 2 HI	I/O
20	HSDB RX 4A	IN
21	HSDB TX 4A	OUT
22	POWER GROUND	--
23	ARINC 429 IN 1B	IN
24	ARINC 429 IN 2B	IN
25	ARINC 429 IN 3B	IN
26	ARINC 429 IN 4B	IN
27	ARINC 429 IN 5B	IN
28	ARINC 429 IN 6B	IN
29	RESERVED	--
30	RESERVED	--
31	RS-485/422 1A	I/O
32	RS-485/422 2A	I/O
33	DISCRETE IN 4*	IN
34	DISCRETE IN 5*	IN
35	DISCRETE IN 6*	IN
36	DISCRETE OUT 4	OUT
37	DISCRETE OUT 5	OUT
38	DISCRETE OUT 6	OUT
39	PPS I/O 1 LO	I/O
40	PPS I/O 2 LO	I/O
41	HSDB RX 4B	IN
42	HSDB TX 4B	OUT
43	ARINC 429 OUT 1A	OUT
44	ARINC 429 OUT 1B	OUT
45	ARINC 429 OUT 2A	OUT
46	ARINC 429 OUT 2B	OUT
47	ARINC 429 OUT 3A	OUT
48	ARINC 429 OUT 3B	OUT
49	RS-485/422 3B	I/O
50	RS-485/422 3A	I/O
51	ACTIVE HI/LO DISCRETE IN 7	IN
52	ACTIVE HI/LO DISCRETE IN 8	IN
53	ACTIVE HI DISCRETE IN 9	IN
54	ACTIVE HI DISCRETE IN 10	IN
55	DISCRETE OUT 7	OUT
56	DISCRETE OUT 8	OUT
57	RS-232 IN 7	IN
58	RS-232 OUT 7	OUT
59	RS-232 SIGNAL GROUND 7	--
60	RS-232 IN 8	IN
61	RS-232 OUT 8	OUT
62	RS-232 SIGNAL GROUND 8	--

An asterisk (*) following a signal name denotes that the signal is an Active-Low, requiring a ground to activate. If there is no asterisk, the signal is an Active-High.

A.1.4 J1015

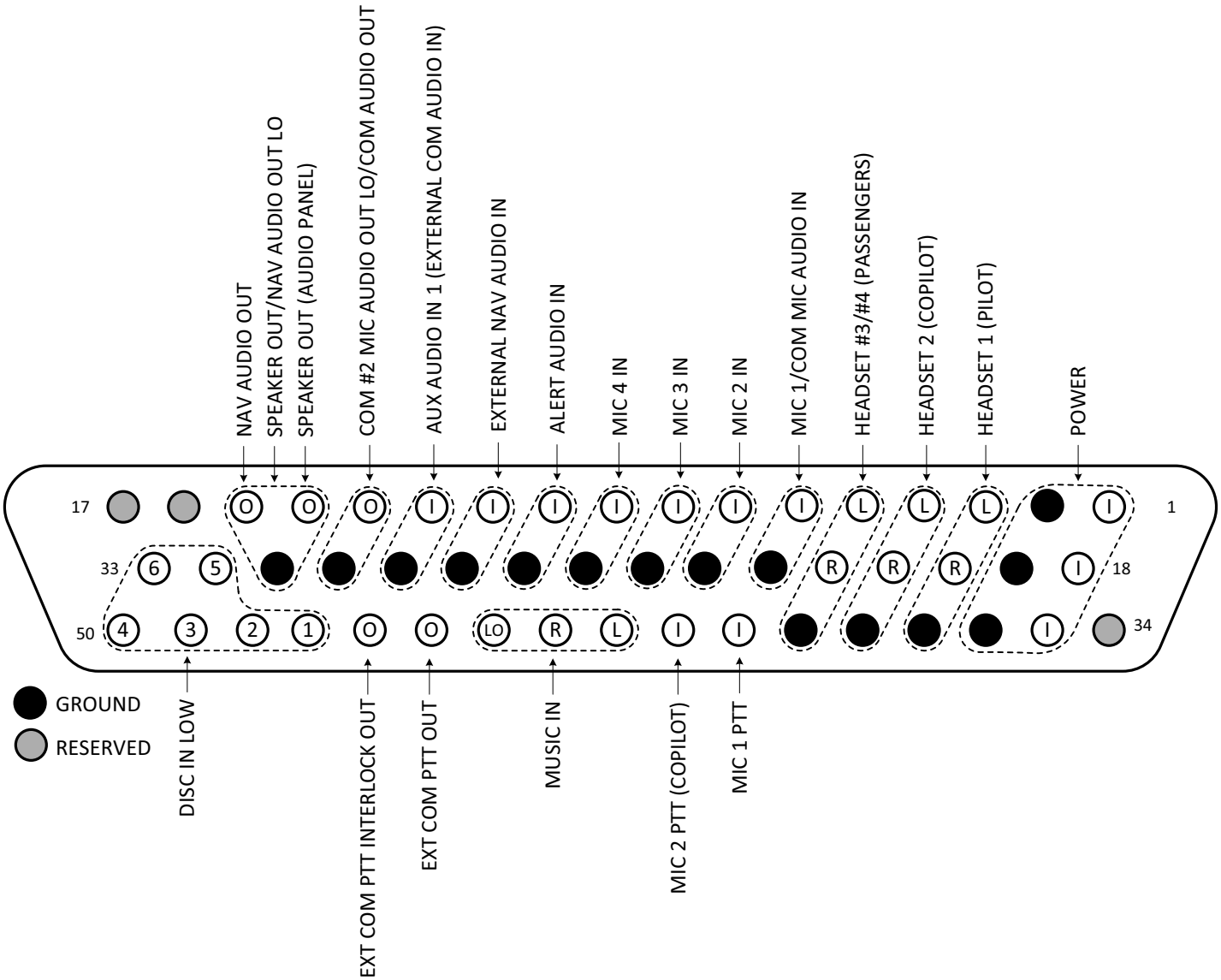

Figure A-7 GDU 116C/NC J1015 Connector
As Viewed Looking at Rear of Unit (Pin 1 is Top Right)

Table A-7 GDU 116C/NC J1015 Connector

Pin	Pin Name	I/O	Pin	Pin Name	I/O
1	POWER INPUT	IN	26	MIC 4 LO	IN
2	POWER GROUND	--	27	ALERT AUDIO IN LO	IN
3	HEADSET #1 (PILOT) LEFT	OUT	28	EXTERNAL NAV AUDIO IN LO	IN
4	HEADSET #2 (COPILOT) LEFT	OUT	29	EXTERNAL COM AUDIO IN LO	IN
5	HEADSET #3/4 (PASSENGERS) LEFT	OUT	30	EXTERNAL COM MIC AUDIO OUT LO (AUDIO PANEL)/COM AUDIO OUT LO	OUT
6	MIC 1 PILOT AUDIO IN (AUDIO PANEL)/COM MIC AUDIO IN	IN	31	SPEAKER OUT LO (AUDIO PANEL)/NAV AUDIO OUT LO	OUT
7	MIC 2 IN	IN	32	DISCRETE IN 5*	IN
8	MIC 3 IN	IN	33	DISCRETE IN 6*	IN
9	MIC 4 IN	IN	34	RESERVED	--
10	ALERT AUDIO IN 1	IN	35	POWER INPUT	IN
11	EXTERNAL NAV AUDIO IN	IN	36	POWER GROUND	--
12	EXTERNAL COM AUDIO IN	IN	37	HEADSET #1 (PILOT) GROUND	--
13	EXTERNAL COM MIC AUDIO OUT (AUDIO PANEL)/COM AUDIO OUT	OUT	38	HEADSET #2 (COPILOT) GROUND	--
14	SPEAKER OUT	OUT	39	HEADSET #3/4 (PASSENGERS) GROUND	--
15	NAV AUDIO OUT	OUT	40	MIC 1 PTT (PILOT, AUDIO PANEL)/COM PTT	IN
16	RESERVED	--	41	MIC 2 PTT (COPILOT)	IN
17	RESERVED	--	42	STEREO MUSIC IN LEFT	IN
18	POWER INPUT	IN	43	STEREO MUSIC IN RIGHT	IN
19	POWER GROUND	--	44	STEREO MUSIC IN LO	IN
20	HEADSET #1 (PILOT) RIGHT	OUT	45	EXTERNAL COM PTT KEY OUT	OUT
21	HEADSET #2 (COPILOT) RIGHT	OUT	46	EXTERNAL COM INTERLOCK OUT	OUT
22	HEADSET #3/4 (PASSENGERS) RIGHT	OUT	47	DISCRETE IN 1*	IN
23	MIC 1 LO(PILOT, AUDIO PANEL)/COM MIC AUDIO LO	IN	48	DISCRETE IN 2*	IN
24	MIC 2 LO	IN	49	DISCRETE IN 3*	IN
25	MIC 3 LO	IN	50	DISCRETE IN 4*	IN

An asterisk (*) following a signal name denotes that the signal is an Active-Low, requiring a ground to activate. If there is no asterisk, the signal is an Active-High.

A.1.5 Functional Descriptions

A.1.5.1 HSDB (Ethernet)

All displays include three HSDB ports on connector J1012.

GDU 116C and GDU 116NC include an additional HSDB port on connector J1013.

Table A-8 HSDB (Ethernet) Ports

PIN	PIN NAME	CONNECTOR	I/O
2	HSDB TX 1B	J1012	OUT
3	HSDB TX 1A	J1012	OUT
4	HSDB TX 2B	J1012	OUT
5	HSDB TX 2A	J1012	OUT
6	HSDB RX 2B	J1012	IN
7	HSDB RX 2A	J1012	IN
19	HSDB RX 1B	J1012	IN
20	HSDB RX 1A	J1012	IN
21	HSDB TX 3B	J1012	OUT
22	HSDB TX 3A	J1012	OUT
38	HSDB RX 3B	J1012	IN
39	HSDB RX 3A	J1012	IN
20	HSDB RX 4A	J1013	IN
21	HSDB TX 4A	J1013	OUT
41	HSDB RX 4B	J1013	IN
42	HSDB TX 4B	J1013	OUT

A.1.5.2 Configuration Module

- Located in the J1012 connector backshell
- Stores installation-specific configuration information
- Eliminates the need to reconfigure aircraft specific items when replacing a LRU
- Each GDU 116( ) in a system must have a configuration module

Table A-9 Configuration Module

PIN	PIN NAME	CONNECTOR	I/O
17	CONFIG MODULE POWER	J1012	OUT
49	CONFIG MODULE GROUND	J1012	--
33	CONFIG MODULE CLOCK	J1012	OUT
50	CONFIG MODULE DATA	J1012	I/O

A.1.5.3 Discrete Inputs (GDU 116C and 116NC Only)

Discrete input signals are configurable for active high or active low pins. Refer to section 5.5.3 for more information.

- Six active-low inputs on J1013
- Two active-high/low inputs on J1013
- Two active-high inputs on J1013
- Six active-low inputs on J1015

Table A-10 Discrete Inputs

PIN	PIN NAME	CONNECTOR	I/O
12	DISCRETE IN 1 LO	J1013	IN
13	DISCRETE IN 2 LO	J1013	IN
14	DISCRETE IN 3 LO	J1013	IN
33	DISCRETE IN 4 LO	J1013	IN
34	DISCRETE IN 5 LO	J1013	IN
35	DISCRETE IN 6 LO	J1013	IN
51	DISCRETE IN 7 HI/LO	J1013	IN
52	DISCRETE IN 8 HI/LO	J1013	IN
53	DISCRETE IN 9 HI	J1013	IN
54	DISCRETE IN 10 HI	J1013	IN
47	DISCRETE IN 1 LO	J1015	IN
48	DISCRETE IN 2 LO	J1015	IN
49	DISCRETE IN 3 LO	J1015	IN
50	DISCRETE IN 4 LO	J1015	IN
32	DISCRETE IN 5 LO	J1015	IN
33	DISCRETE IN 6 LO	J1015	IN

A.1.5.3.1 Active-Low Inputs (GDU 116C and 116NC Only)

Active (low) state:

- Input signal is < 3.5 VDC and/or resistance to ground < 375 Ω
- Inactive (open/high) state: Input signal is between >6.5 VDC and/or resistance to ground > 100 kΩ

J1013 provides discrete inputs similar to those found on GEA 24 or GAD 27. These are generic system discrete inputs.

The discrete inputs found on J1015 are specific to the COM, NAV, and Audio Panel functions of the system.

A.1.5.3.2 Active-High Inputs (GDU 116C and 116 NC Only)

Active State:

- Apply an input voltage > 6.5 V.

Inactive State:

- For voltage inputs, apply an input voltage ≤ 3.5 V.
- For resistive inputs, apply a resistance to ground ≤ 375 Ω.

A.1.5.4 Discrete Outputs (GDU 116C and 116NC Only)

Discrete output signals are active low pins.

- Eight active-low outputs

The two states of these outputs are as follows:

ACTIVE: Vout ≤ 1.0VDC with ≤ 500mA

Sink current must be externally limited to 500mA max.

INACTIVE: Floating (can be pulled up to externally sourced Vout in the range 0 ≤ Vout ≤ 33VDC)

Leakage current in the INACTIVE state is typically ≤ 10µA to ground.

Table A-11 Discrete Outputs

PIN	PIN NAME	CONNECTOR	I/O
15	DISCRETE OUT 1 LO	J1013	OUT
16	DISCRETE OUT 2 LO	J1013	OUT
17	DISCRETE OUT 3 LO	J1013	OUT
36	DISCRETE OUT 4 LO	J1013	OUT
37	DISCRETE OUT 5 LO	J1013	OUT
38	DISCRETE OUT 6 LO	J1013	OUT
55	DISCRETE OUT 7 LO	J1013	OUT
56	DISCRETE OUT 8 LO	J1013	OUT

A.1.5.5 RS-232

- All RS-232 serial ports are configurable, unless otherwise stated
- The RS-232 outputs are compatible with EIA Standard RS-232C, with an output voltage swing of at least +5 V when driving a standard RS-232 load

Table A-12 RS-232 Ports

PIN	PIN NAME	CONNECTOR	I/O
47	RS-232 IN 1	J1012	IN
14	RS-232 IN 2	J1012	IN
29	RS-232 IN 3	J1012	IN
23	RS-232 IN 4	J1012	IN
24	RS-232 IN 5	J1012	IN
5	RS-232 IN 6	J1011	IN
57	RS-232 IN 7	J1013	IN
60	RS-232 IN 8	J1013	IN
48	RS-232 OUT 1	J1012	OUT
30	RS-232 OUT 2	J1012	OUT
13	RS-232 OUT 3	J1012	OUT
40	RS-232 OUT 4	J1012	OUT
41	RS-232 OUT 5	J1012	OUT
4	RS-232 OUT 6	J1011	OUT
57	RS-232 OUT 7	J1013	OUT
61	RS-232 OUT 8	J1011	OUT
9	RS-232 GND 6	J1011	--
59	RS-232 GND 7	J1013	--
34	RS-232 SIGNAL GND 1	J1012	--
35	RS-232 SIGNAL GND 2	J1012	--
36	RS-232 SIGNAL GND 3	J1012	--
37	RS-232 SIGNAL GND 4	J1012	--
44	RS-232 SIGNAL GND 5	J1012	--
62	RS-232 SIGNAL GND 8	J1013	--

A.1.5.6 ARINC 429 (GDU 116C and 116NC Only)

Outputs are compatible with the latest ARINC 429 electrical specifications.

Table A-13 ARINC 429 In

PIN	PIN NAME	CONNECTOR	I/O
2	ARINC 429 RX 1A	J1013	IN
23	ARINC 429 RX 1B	J1013	IN
3	ARINC 429 RX 2A	J1013	IN
24	ARINC 429 RX 2B	J1013	IN
4	ARINC 429 RX 3A	J1013	IN
25	ARINC 429 RX 3B	J1013	IN
5	ARINC 429 RX 4A	J1013	IN
26	ARINC 429 RX 4B	J1013	IN
6	ARINC 429 RX 5A	J1013	IN
27	ARINC 429 RX 5B	J1013	IN
7	ARINC 429 RX 6A	J1013	IN
28	ARINC 429 RX 6B	J1013	IN

Table A-14 ARINC 429 Out

PIN	PIN NAME	CONNECTOR	I/O
43	ARINC 429 TX 1A	J1013	Out
44	ARINC 429 TX 1B	J1013	Out
45	ARINC 429 TX 2A	J1013	Out
46	ARINC 429 TX 2B	J1013	Out
47	ARINC 429 TX 3A	J1013	Out
48	ARINC 429 TX 3B	J1013	Out

A.1.5.7 RS-485 (GDU 116C and 116NC Only)

The RS-485 port is compatible with EIA standards, with a differential output voltage swing of at least +7.5 V when driving a standard RS-485 load.

Table A-15 RS-485 Ports

PIN	PIN NAME	CONNECTOR	I/O
10	RS-485 1B	J1013	I/O
31	RS-485 1A	J1013	I/O
11	RS-485 2B	J1013	I/O
32	RS-485 2A	J1013	I/O
49	RS-485 3B	J1013	I/O
50	RS-485 3A	J1013	I/O

A.1.5.8 CAN Bus

At each of the two extreme ends of the CAN bus backbone, a 120 Ω resistor is installed to terminate the bus. If the GDU 116( ) is at the end of the bus, separate resistor components are not required, as the termination is accomplished inside the display.

To terminate the CAN bus at the GDU, short pins 28 and 45 together. This creates a 120 Ω termination internal to the GDU. If installed, the jumper should be 3" or less and contained completely within the connector backshell.

The J1011 connector can be used for connections to the GSU 25 when mounting the GSU 25 to the back of the GDU 116. This mounting method may not be recommended for all installations, contact Garmin for details before using this method.

Table A-16 CAN Bus

PIN	PIN NAME	CONNECTOR	I/O
1	CAN HI	J1011	I/O
2	CAN LO	J1011	I/O
28	CAN BUS TERM	J1012	I/O
45	CAN LO	J1012	I/O
46	CAN HI	J1012	I/O

A.1.5.9 Power

Power inputs can be found on multiple connectors on GDU 116.

The main 50-pin connector, J1012, has four main power inputs. All four power and ground connections should be connected to the aircraft electrical system, as shown in appendix B. It is acceptable to use one of these power inputs for a connection to a backup battery, if equipped.This connector is present on all display variants. A USB-C port on the bezel of the GDU 116 provides up to 27W of power for device charging when 11V or greater is detected on at least 2 power input pins of the GDU 116 J1012 connector.

Connector J1013 includes one power input that can be used as an additional power input to supplement the power inputs on J1012. This does not power the NAV/COM board however.

COM and NAV/COM display variants include an additional 50-pin connector (J1015) dedicated to COM, NAV/COM and audio panel functions, as applicable. This connector includes three dedicated power inputs to provide power for these functions. All three are required to be connected.

A.1.5.9.1 J1011

J1011 includes an optional power output to a connected GEA 24 or GSU 25 (pins 7, 8). While this is an option, it is generally recommended to provide an independent power connection to the unit, rather than only using the pass through function of the display.

Additionally, pin 3 can be used to provide power to the display provisions for future updates to support remote connectivity and database updates. More information on this input can be found in the sections below.

Battery power interface provisions for future updates to support remote connectivity and database updates using pin 3 of J1011. Current draw is less than 42 uA at 12V.

Refer to figure B-9.19 for assembly of 330-01791-10 fuse holder. Locate fuse holder as close as possible to connection at positive battery terminal, hot side of master solenoid, or always-hot battery bus.

In order to avoid depleting the aircraft battery, it is suggested that this connection be switched from the cockpit, to allow disconnecting this path when the aircraft will be idle for long periods of time.

Table A-17 J1011 Pins

PIN	PIN NAME	I/O
3	BAT POWER	IN
6	GROUND	--
7	POWER OUT	OUT
8	POWER OUT	OUT
9	GROUND	--

A.1.5.9.2 J1012

Table A-18 J1012 Pins

PIN	PIN NAME	I/O
9	POWER GROUND	--
10	POWER GROUND	--
11	POWER INPUT	IN
12	POWER INPUT	IN
15	POWER GROUND	--
16	POWER GROUND	--
31	POWER INPUT	IN
32	POWER INPUT	IN

A.1.5.9.3 J1013 (GDU 116C and 116NC Only)

Table A-19 J1013 Pins

PIN	PIN NAME	I/O
1	POWER INPUT	IN
22	POWER IN GROUND	--

A.1.5.9.4 J1015 (GDU 116C and 116NC Only)

All three power inputs must be connected.

Table A-20 J1015 Pins

PIN	PIN NAME	I/O
1	POWER INPUT	IN
2	POWER IN GROUND	--
18	POWER INPUT	IN
19	POWER GROUND	--
35	POWER INPUT	IN
36	POWER GROUND	--

A.1.5.10 PPS Time Mark (GDU 116C and 116NC Only)

PPS is only used for GTX 345D or 345DR transponders. Refer to appendix B for wiring details.

Table A-21 PPS Time Mark Pins

PIN	PIN NAME	I/O
18	PPS I/O 1 HI	I/O
19	PPS I/O 2 HI	I/O
39	PPS I/O LO	I/O
40	PPS I/O LO	I/O

A.1.5.11 Lighting Bus

The GDU 116B/C/NC can accept a variable lighting bus voltage on pin 26 or pin 43 of the J1012 connector. These inputs are reference voltage inputs, not power inputs. A user adjusted lighting bus input voltage (usually from a potentiometer) can be used to manually command the brightness of the GDU display and bezel/knob backlight. The center tap on this potentiometer is connected to one of the pins (26 or 43).

Either pin can accept a 5VDC, 14VDC, or 28 VDC lighting bus input. For providing this reference signal to more than one device, a commercially available regulated backlight voltage reference is recommended. Alternatively, Pin 26 or Pin 43 of the GDU 116 can be connected to the lighting bus output of a GAD 27. The GAD 27 provides a consistent reference voltage for lighting bus applications. Refer to section A.10 for additional GAD 27 lighting bus information.

Refer to section 5.7.4 for lighting bus configuration guidance.

Table A-22 Lighting Bus Pins on J1012

PIN	PIN NAME	I/O
26	LIGHTING BUS #1	IN
43	LIGHTING BUS #2	IN

A.1.5.12 Video

The HDMI receiver supports video formats ranging from 480i to 1080p, and display resolutions from VGA (640 x 480 at 60Hz) to UXGA (1600 x 1200 at 60Hz).

Supported video formats:

- 1920x1080p @ 60 Hz (Preferred)
- 640x480p @ 60/72/75 Hz
- 720x400p @ 70/88 Hz
- 720x480p @ 60 Hz
- 720x576p @ 50 Hz
- 800x600p @ 56/60/72/75 Hz
- 832x624p @ 75 Hz
- 1024x768p @ 60/70/75 Hz
- 1152x864p @ 75 Hz
- 1152x870p @ 75 Hz
- 1280x720p @ 50/60 Hz
- 1280x960p @ 60 Hz
- 1280x1024p @ 60/75 Hz
- 1366x768p @ 60 Hz
- 1440x900p @ 60 Hz
- 1600x1200p @ 60 Hz
- 1680x1050p @ 60 Hz
- 1920x1080i @ 50/60 Hz
- 1920x1080p @ 50/60 Hz

A.1.5.13 Fail Safe Audio

When the unit loses power, internal relays connect:

- AUX 1 to EXTERNAL COM AUDIO IN
- Pilot Headset Left to HEADSET #1 (PILOT) LEFT
- MIC 1 to MIC 1 PILOT AUDIO IN
- COM Audio Out to EXTERNAL COM MIC AUDIO OUT • MIC 1 Key to MIC 1 PTT
- COM Tx Key to EXTERNAL COM PTT KEY OUT

A.1.5.14 Headset Audio (GDU 116C and 116NC Only)

Table A-23 Headset Audio Pins

PIN	PIN NAME	I/O
3	HEADSET #1 (PILOT) LEFT	OUT
4	HEADSET #2 (COPILOT) LEFT	OUT
5	HEADSET #3/4 (PASSENGERS) LEFT	OUT
20	HEADSET #1 (PILOT) RIGHT	OUT
21	HEADSET #2 (COPILOT) RIGHT	OUT
22	HEADSET #3/4 (PASSENGERS) RIGHT	OUT

A.1.5.15 MIC IN Audio (GDU 116C and 116NC Only)

If the AXIS display is the Audio panel device in the system, each MIC input is connected to the Microphone channel from each headset jack in the aircraft.

If an external Audio Panel is in use, the MIC 1 input is used to receive MIC Out from the external audio panel, when the COM radio within the AXIS display is the MIC selected COM on the external audio panel.

MIC 1, MIC 2, MIC 3, and MIC 4 are standard carbon or dynamic mic inputs with integrated preamps providing minimum 70 mVrms into a 600 Ω load.

MIC 1 and MIC 2 are set in the factory so that 500 mVrms modulates the transmitter to 90% nominally at 1000 Hz. The microphone gain adjustment is made through configuration mode.

Table A-24 MIC IN Audio Pins

PIN	PIN NAME	I/O
6	MIC 1 (PILOT, AUDIO PANEL)/COM MIC AUDIO IN	IN
7	MIC 2 IN	IN
23	MIC 1 LO (PILOT, AUDIO PANEL)/COM MIC AUDIO LO	IN
24	MIC 2 LO	IN

A.1.5.16 Pilot/Copilot PTT Inputs (GDU 116C and 116NC Only)

When pulled low, these inputs allow the audio that is present on the PILOT/COPILOT MIC IN to be transmitted over the radio.

Active-Low discrete inputs are considered active if either the voltage to ground is = 3.5 VDC or the resistance to ground is = 375 Ω.

These inputs are considered inactive if the voltage to ground is 6.5-33 VDC or the resistance to ground is >100 kΩ.

Table A-25 Pilot/Copilot PTT Pins

PIN	PIN NAME	I/O
40	MIC 1 PTT (PILOT, AUDIO PANEL)/COM PTT	IN
41	MIC 2 PTT (COPILOT)	IN

A.1.5.17 Alert Audio In (GDU 116C and 116NC Only)

Auxiliary audio mono audio inputs have a nominal input impedance of 600 Ω, max. rated input level is 5 Vrms.

Table A-26 Alert Audio In Pins

PIN	PIN NAME	I/O
10	ALERT AUDIO IN 1	IN
27	ALERT AUDIO IN LO	IN

A.1.5.18 External NAV Audio In (GDU 116C and 116NC Only)

The external NAV audio inputs have a nominal input impedance of 600 Ω, max. rated input level is 5 Vrms. This input is used to receive NAV audio from an external NAV radio, when the AXIS display is used as the audio panel device in the system.

Table A-27 External NAV Audio In Pins

PIN	PIN NAME	I/O
11	EXTERNAL NAV AUDIO IN 1	IN
28	EXTERNAL NAV AUDIO IN LO	IN

A.1.5.19 External COM Audio In (GDU 116C and 116NC Only)

The external COM audio input has a nominal input impedance of 600 Ω, max. rated input level is 5 Vrms. This input is used to receive COM audio from an external COM Radio, when the AXIS display is used as the audio panel device in the system.

Table A-28 External COM Audio In Pins

PIN	PIN NAME	I/O
12	EXTERNAL COM AUDIO IN	IN
29	EXTERNAL COM AUDIO IN LO	IN

A.1.5.20 External COM PTT Key Out (GDU 116C and 116NC Only)

When the AXIS display is used as the audio panel device for the system, this pin is used to trigger the external COM to transmit, when the external COM is the MIC selected COM for the AXIS audio panel, and the MIC 1 PTT or MIC 2 PTT input is active

Table A-29 External COM PTT Key Out Pins

PIN	PIN NAME	I/O
45	EXTERNAL COM PTT KEY OUT	OUT

A.1.5.21 External COM MIC Audio Out (GDU 116C and 116NC Only)

When the AXIS display is used as the audio panel device for the system, these pins are used to send MIC audio to the external COM in the system.

When an external Audio Panel Device is in use, these pins are used as a COM audio output. Refer to section A.1.5.23 for more information.

Table A-30 External COM MIC Audio Out Pins

PIN	PIN NAME	I/O
13	EXTERNAL COM MIC AUDIO OUT (AUDIO PANEL)/COM AUDIO OUT	OUT
30	EXTERNAL COM MIC AUDIO OUT LO (AUDIO PANEL)/COM AUDIO OUT LO	OUT

A.1.5.22 NAV Audio Out (GDU 116C and 116NC Only)

NAV AUDIO OUT HI supplies 65 mW into a 500 Ω load. It is a balanced output and the NAV AUDIO OUT LO output must be connected.

This is generally used to connect to an external audio panel. This connection is not required for the NAV radio built into an AXIS display that is used as the Audio panel device in the system. In this case, NAV audio is internally routed. This connection is required if another AXIS display in the system is the audio panel device however.

When the AXIS display is used as the audio panel device in the system, pin 31 is used for the speaker output. Refer to section A.1.5.24 for more information.

Table A-31 NAV Audio Out Pins

PIN	PIN NAME	I/O
15	NAV AUDIO OUT	OUT
31	SPEAKER OUT LO (AUDIO PANEL)/NAV AUDIO OUT LO	OUT

A.1.5.23 COM Audio Out (GDU 116C and 116NC Only)

COM AUDIO supplies 65 mW into a 500 Ω load. This is a balanced output and the LO output must be connected.

This is generally connected to an external audio panel, and is the summation of COM receiver audio and sidetone audio.

NOTE

This connection is not required for the COM radio built into an AXIS display that is used as the audio panel device in the system. COM audio is internally routed in this case. This connection, however, is required if another AXIS display in the system is the audio panel device.

These pins are used for External COM MIC Audio Out when the AXIS flight display is the audio panel device in the system. Refer to section A.1.5.21.

Table A-32 COM Audio Out Pins

PIN	PIN NAME	I/O
13	EXTERNAL COM MIC AUDIO OUT (AUDIO PANEL)/COM AUDIO OUT	OUT
30	EXTERNAL COM MIC AUDIO OUT LO (AUDIO PANEL)/COM AUDIO OUT LO	OUT

A.1.5.24 Speaker Output (GDU 116C and 116NC Only)

The speaker output is 12 W into a 4 Ω load. The speaker output is used when the AXIS display is the audio panel device in the system, and an external cabin speaker is installed.

Pin 31 is used for NAV audio out, when an external audio panel is in use. Refer to section A.1.5.22 for more information.

Table A-33 Speaker Output Pins

PIN	PIN NAME	I/O
14	SPEAKER OUT (AUDIO PANEL)	OUT
31	SPEAKER OUT LO (AUDIO PANEL)/NAV AUDIO OUT LO	OUT

A.1.5.25 Stereo Music In (GDU 116C and 116NC Only)

The music inputs are noise rejecting and have a nominal input impedance of 600 Ω. The max. rated input level is 1.5 Vrms. The MUSIC LO must be connected to the music source along with MUSIC RIGHT and MUSIC LEFT. If MUSIC LO is not connected, music volume will be low (or inaudible), noisy, and distorted.

Table A-34 Speaker Output Pins

PIN	PIN NAME	I/O
42	STEREO MUSIC IN LEFT	IN
43	STEREO MUSIC IN RIGHT	IN
44	STEREO MUSIC IN LO	IN

A.1.5.26 TX Interlock Out (GDU 116C and 116NC Only)

This discrete output will be pulled low when the GDU 116C or NC is transmitting. This is used to connect to the transmit interlock input of a cross-side COM radio, to desensitize its receiver when the AXIS COM radio is transmitting. Not all cross-side radios require this input.

Table A-35 TX Interlock Out Pins

PIN	PIN NAME	I/O
46	TX INTERLOCK OUT	OUT

A.2 GSU 25 (AHRS/Air Data Sensor Unit)

A.2.1 GSU 25

The GSU 25 mating designator, part number, and associated connector kit are listed in table A-36.

Table A-36 GSU 25D Connectors

Ref. Des.	Description	Connector P/N	Kit P/N
J251	Conn, Rcpt, D-Sub, Crimp Socket, 09 ckt	330-00625-09	011-03002-00
J252	Conn, Rcpt, D-Sub, Crimp Socket, 15 ckt	330-00625-15	011-03002-01

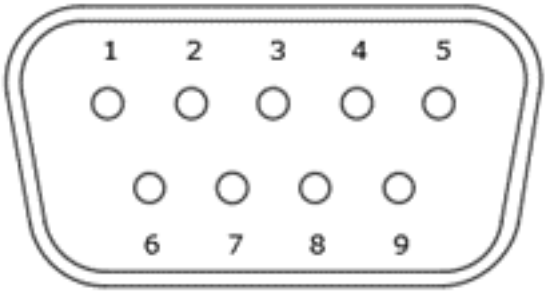

Figure A-8 GSU 25D J251 Connector
As Viewed Looking at Connector on Unit

Table A-37 GSU 25D J251 Connector

Pin	Pin Name	I/O
1	CAN-H	I/O
2	CAN-L	I/O
3	RESERVED	--
4	RS-232 RX 1	IN
5	RS-232 TX 1	OUT
6	POWER GROUND	--
7	AIRCRAFT POWER 1	IN
8	AIRCRAFT POWER 2	IN
9	RS-232 GROUND 1	--

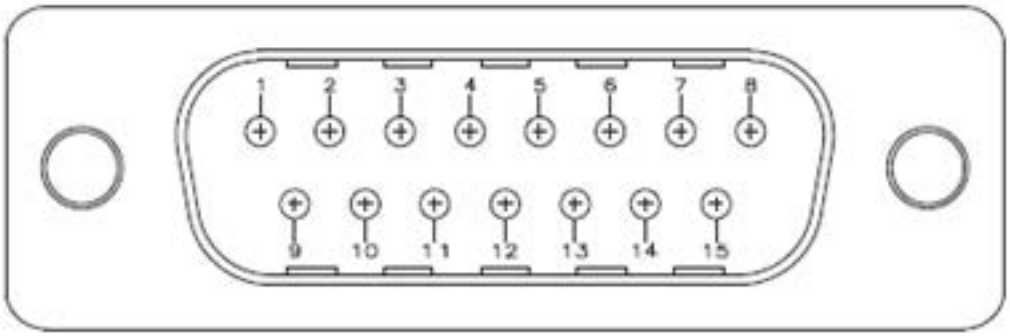

Figure A-9 GSU 25 J252 Connector
As Viewed Looking at Connector on Unit

Table A-38 GSU 25 J252 Connector

Pin	Pin Name	I/O
1	TEMP PROBE POWER OUT	OUT
2	TEMP PROBE IN HI	IN
3	TEMP PROBE IN LO	IN
4	UNIT ID GROUND	--
5	UNIT ID	--
6	+12V MAGNETOMETER POWER	OUT
7	MAGNETOMETER GROUND	--
8	RESERVED	--
9	RS-232 TX 3	OUT
10	RS-232 RX 3	IN
11	RS-232 GROUND 3	--
12	RS-485 RX A	IN
13	RS-485 RX B	IN
14	RS-232 GROUND 2	--
15	RS-232 TX 2	OUT

A.2.2 Serial Data

A.2.2.1 RS-232

Two channels of RS-232 In and three channels of RS-232 Out data.

RS-232 #1: Can optionally be connected to a GDU to provide a redundant path for attitude data. Also used to configure a GSU 25 as ADAHRS #3.

RS-232 #2: Transmits data to the GMU 22.

RS-232 #3: Connects to a GTX transponder to provide pressure altitude data and remote transponder control. Primary transponder connection is made to ADAHRS 1. A second transponder connection to ADAHRS 2 can be made for redundancy of this data path.

Table A-39 GSU 25 RS-232 Pins

Pin	Pin Name	Connector	I/O
4	RS-232 IN 1	J251	IN
5	RS-232 OUT 1	J251	OUT
15	RS-232 OUT 2	J252	OUT
10	RS-232 IN 3	J252	IN
9	RS-232 OUT 3	J252	OUT

A.2.2.2 RS-485 Input

The GSU 25 contains one channel of RS-485 serial data communications for receiving data from the GMU 22.

Table A-40 GSU 25 RS-485 Input Pins

Pin	Pin Name	Connector	I/O
12	RS-485 IN A	J252	IN
13	RS-485 IN B	J252	IN

A.2.2.3 CAN Bus

This data bus conforms to the BOSCH standard for Controller Area Network 2.0-B. This bus complies with ISO 11898. Refer to section 3.2.2 for details.

Table A-41 GSU 25 CAN Bus Pins

Pin	Pin Name	Connector	I/O
1	CAN BUS HI	J251	I/O
2	CAN BUS LOW	J251	--

A.2.3 Temperature Inputs

Temperature input is used for OAT computations. The temperature input is a three-wire temperature probe interface. OAT Power Out and OAT High are connected internally at the OAT probe. A GTP 59 or other supported temperature probe is required for the ADAHRS (GSU 25/73) installation that is configured as ADAHRS 1. The GTP 59 is a resistive temperature device. Refer to figure 4-32 for the temperature probe installation drawing.

Table A-42 GSU 25 Temperature Input Pins

Pin	Pin Name	Connector	I/O
1	OAT POWER	J252	OUT
2	OAT HIGH	J252	IN
3	OAT LOW	J252	IN

A.2.4 Unit ID

Refer to figure B-1.5 for connection drawing.

Table A-43 GSU 25 Unit ID Pins

Pin	Pin Name	Connector	I/O
4	UNIT ID 1 GROUND	J252	--
5	UNIT ID 1	J252	IN

Table A-44 GSU 25 ADAHRS Pins

Unit ID	Comment
ADAHRS #1	Leave pins 4 and 5 (of J252) unconnected
ADAHRS #2	Connect pin 4 (of J252) to pin 5 (of J252)
ADAHRS #3	Connect pin 4 (of J252) to pin 5 (of J252) and connect RS-232 In 1 to RS-232 Out 1 (pins 4 and 5 on J251)

A.2.5 Aircraft Power

The GSU 25 can operate using power from one or both inputs (AIRCRAFT POWER 1 AND AIRCRAFT POWER 2). The pins are internally connected using diodes to prevent current from flowing between the two power inputs. AIRCRAFT POWER 2 is for connecting to an alternate power source, such as on aircraft with two electrical buses.

NOTE

The GSU 25 magnetometer power output pin is intended for use only with the GMU 22/44. Do not connect the GMU 11 or any other device to this pin.

Table A-45 Aircraft Power and Ground

Pin	Pin Name	Connector	I/O
7	AIRCRAFT POWER 1	J251	IN
8	AIRCRAFT POWER 2	J251	IN
6	POWER GROUND	J251	--
9	POWER GROUND	J251	--

GSU 25 outputs supply voltage to the GMU 22 using pins 6 and 7.

Table A-46 Magnetometer Power and Ground

Pin	Pin Name	Connector	I/O
6	+12V MAGNETOMETER POWER	J252	OUT
7	MAGNETOMETER GROUND	J252	--

A.3 GTP 59 (Temperature Probe)

The GTP 59 has one three-wire interface cable as shown in figure A-10. Wire color designations are shown in figure A-11

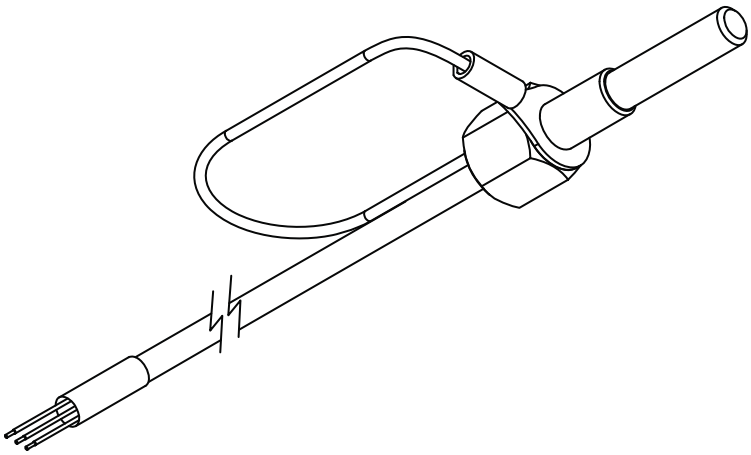

Figure A-10 GTP 59

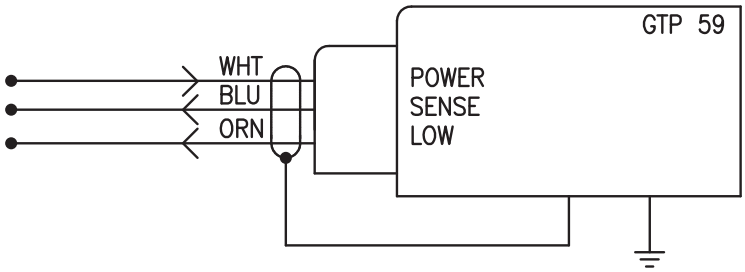

Figure A-11 GTP 59 Wire Color Designations

Table A-47 GTP 59 3-Conductor Shielded Cable

Conductor Color	Name	I/O
White	Probe Power Lead	IN
Blue	Resistive Element HI	OUT
Orange	Resistive Element LO	OUT

A.4 GMU 11 (Magnetometer)

The GMU 11 mating designator, part number, and associated connector kit are listed in table A-48.

Table A-48 GMU 11 Connector

Ref. Des.	Description	Connector P/N	Kit P/N
J111	Conn, Rcpt, D-Sub, Crimp Socket, 09 ckt	330-00625-09	011-03002-00

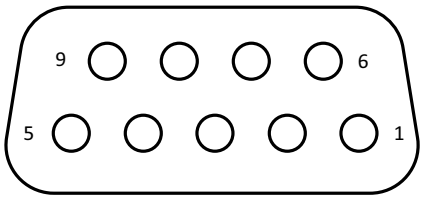

Figure A-12 GMU 11 J111 Connector

Table A-49 GMU 11 J111 Connector

Pin	Function	I/O
1	CAN BUS HI	I/O
2	CAN BUS LO	I/O
3	UNIT ID	--
4	RESERVED	IN
5	RESERVED	OUT
6	SIGNAL GROUND	--
7	AIRCRAFT PWR 1	IN
8	AIRCRAFT PWR 2	IN
9	POWER GROUND	--

A.4.1 Power Function

NOTE

The GMU 11 must be powered from aircraft power. Do not connect the GMU 11 to the magnetometer power output pins on the GSU 25 (these pins are intended for use only with the GMU 22/44(B)).

The GMU 11 is compatible with 14V and 28V systems. AIRCRAFT POWER 1 and AIRCRAFT POWER 2 are "diode ORed" to provide power redundancy.

Table A-50 GMU 11 Power Function Pins

Pin	Pin Name	Connector	I/O
7	AIRCRAFT POWER 1	J111	IN
8	AIRCRAFT POWER 2	J111	IN
9	POWER GROUND	J111	--

A.4.1.1 Unit ID

Install a jumper connecting pin 3 to pin 6 to configure unit as Magnetometer #2.

Table A-51 GMU 11 Unit ID Pins

Pin	Pin Name	Connector	I/O
3	UNIT ID	J111	IN
6	SIGNAL GROUND	J111	--

A.4.1.2 CAN Bus

The CAN Bus conforms to the BOSCH standard for Controller Area Network 2.0-B, and complies with ISO 11898. Refer to section 3.2.2 for details on wiring the CAN bus.

Table A-52 GMU 11 CAN Bus Pins

Pin	Pin Name	Connector	I/O
1	CAN BUS HI	J111	I/O
2	CAN BUS LO	J111	I/O

A.5 GMU 44(B)

The GMU 44(B) mating designator, part number, and associated connector kit are list in table A-53.

Table A-53 GMU 44(B) Connector

REF. DES.	DESCRIPTION	CONN P/N	KIT P/N
J442	Conn, Rcpt, WTW, D369 Series, 6-position, Socket Insert, Key N	330-01430-01	011-04205-00

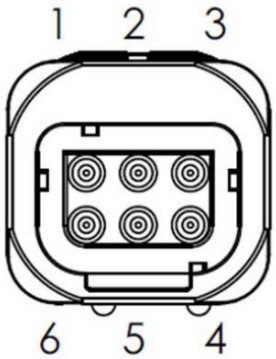

Figure A-13 GMU 44(B) Connector

Table A-54 GMU 44(B) P442 Connector

Pin	Function	I/O
1	SHIELD GROUND	--
2	RS-422 OUT B	OUT
3	RS-422 OUT A	OUT
4	POWER GROUND	--
5	RS-232 IN	IN
6	MAG POWER INPUT	IN

A.6 GMU 22/44

A.6.1 J441 Connector

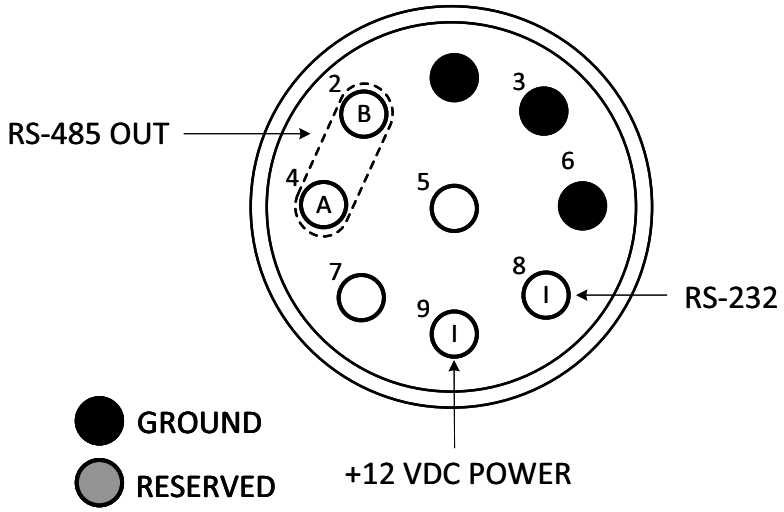

Figure A-14 J441 on GMU 22/44
As Viewed Looking at Connector on Unit

Table A-55 J441 Pins

Pin	Pin Name	I/O
1	SIGNAL GROUND	--
2	RS-485 OUT B	OUT
3	SIGNAL GROUND	--
4	RS-485 OUT A	OUT
5	SPARE	--
6	POWER GROUND	--
7	SPARE	--
8	RS-232 IN	IN
9	+12 VDC POWER	IN

A.6.2 Power Function

Power-input pins accept supply voltage from ADAHRS (GSU 25/73).

Table A-56 GMU 22 Power Pins

Pin	Pin Name	Connector	I/O
9	+12 VDC POWER, GMU 22/44	J441	In
6	POWER GROUND, GMU 22/44	J441	--

A.6.3 Serial Data

A.6.3.1 RS-232

The RS-232 input pin accepts data from the ADAHRS (GSU 25/73).

Table A-57 GMU 22 RS-232 Pins

Pin	Pin Name	Connector	I/O
8	RS-232 IN	J441	In

A.6.3.2 RS-485

The RS-485 pins provide data to the ADAHRS (GSU 25/73).

Table A-58 GMU 22 RS-485 Pins

Pin	Pin Name	Connector	I/O
4	RS-485 OUT A	J441	Out
2	RS-485 OUT B	J441	Out

A.7 GEA 24 (EIS Interface)

A.7.1 GEA 24

The GEA 24 mating designators, part numbers, and associated connector kits are listed in table A-59.

Table A-59 GEA 24 Connectors

Ref. Des.	Description	Connector P/N	Kit P/N
J241	Conn, Rcpt, D-Sub, crimp socket, 09 ckt	330-00625-09	011-02886-00
J242	Conn, Rcpt, D-Sub, crimp pin, 25 ckt	330-00624-25	
J243	Conn, Rcpt, D-Sub, crimp socket, 37 ckt	330-00625-37	
J244	Conn, Rcpt, D-Sub, crimp socket, 50 ckt	330-00625-50	

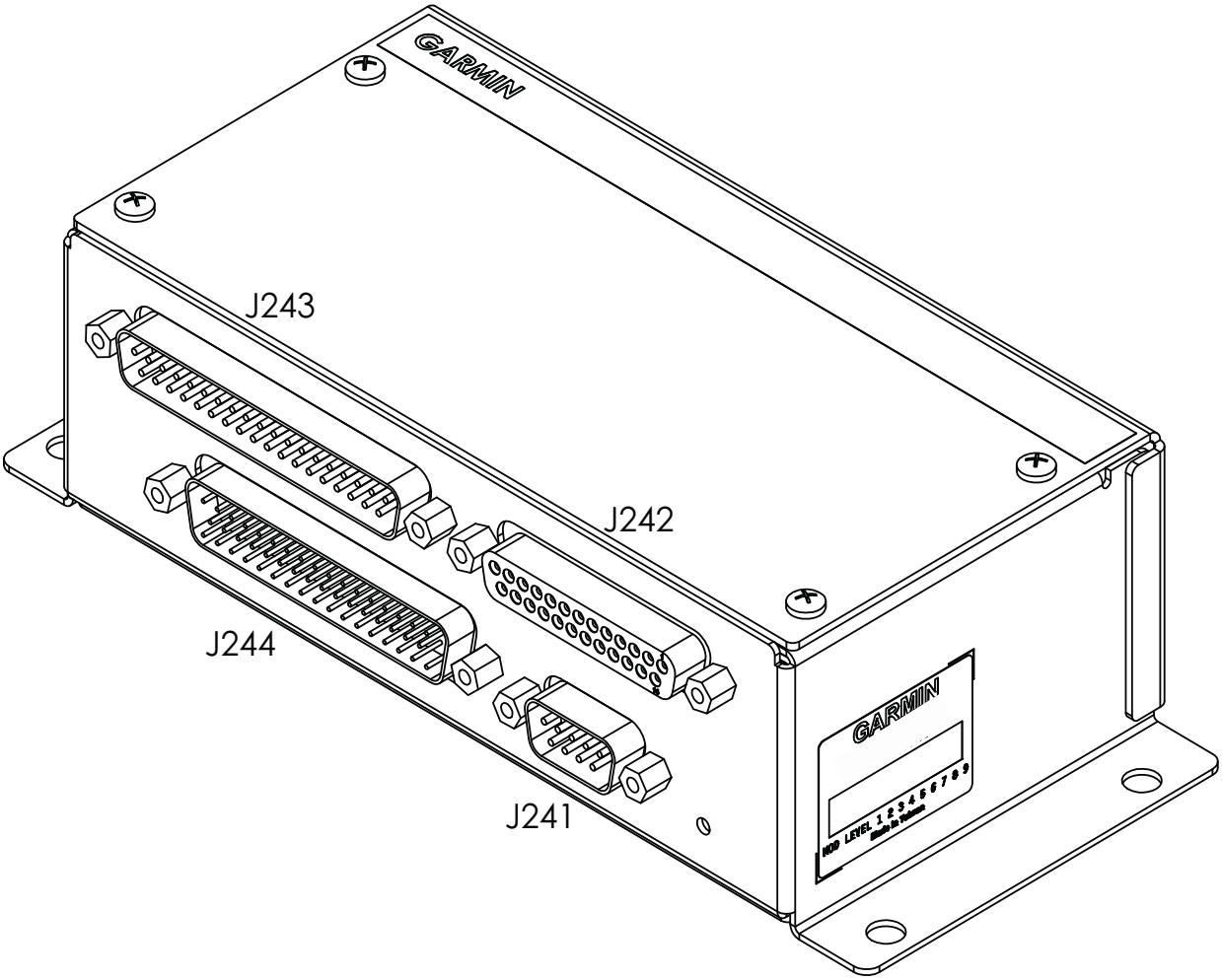

Figure A-15 GEA 24 Connectors

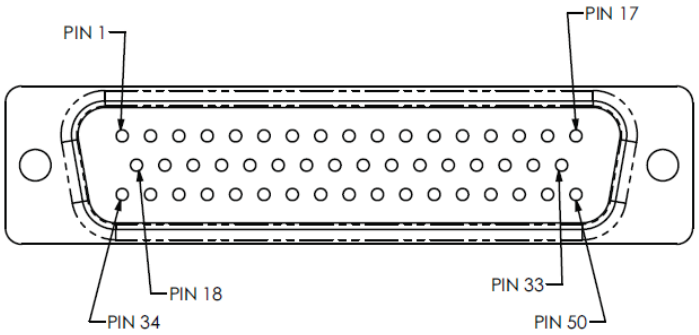

Figure A-16 GEA 24 J244 Connector

Table A-60 GEA 24 J244 Connector

Pin	Function	I/O	Pin	Function	I/O
1	SYSTEM ID 1A*	IN	26	GP GND_2	--
2	SYSTEM ID 1B/GND	--	27	GP +5V_3	OUT
3	RESERVED	--	28	VOLTS 2	IN
4	RESERVED	--	29	GP GND_3	--
5	FUEL QTY +5V_1	OUT	30	GP HI/+5V	OUT
6	FUEL QTY 1	IN	31	GP 5	IN
7	FUEL QTY 1 GND	--	32	GP 5 LO/GND	--
8	FUEL QTY +5V_2	OUT	33	FADEC_CAN2_L	I/O
9	FUEL QTY 2	IN	34	FUEL XDCR +12V_3	OUT
10	FUEL QTY 2 GND	--	35	FUEL XDCR +12V_4	OUT
11	GP 3/FUEL QTY 3 HI/+5V 3	OUT	36	FUEL FLOW (shared with Pin 23, J243 connector)	IN
12	GP 3/FUEL QTY 3	IN	37	FUEL RETURN (shared with Pin 21, J243 connector)	IN
13	GP 3/FUEL QTY 3 LO/GND	--	38	FUEL XDCR GND_3	--
14	GP 4/FUEL QTY 4 HI/+5V 4	OUT	39	FUEL XDCR GND_4	--
15	GP 4/FUEL QTY 4	IN	40	DISCRETE IN** 1	IN
16	GP 4 FUEL 4 QTY LO/GND	--	41	DISCRETE IN** 2	IN
17	FADEC_CAN2_H	I/O	42	DISCRETE IN** 3	IN
18	GP 1 HI/+5V	OUT	43	DISCRETE IN** 4	IN
19	GP 1	IN	44	DISCRETE OUT* 1/MASTER WARNING	OUT
20	GP 1 LO/GND	--	45	DISCRETE OUT* 2/MASTER CAU-TION	OUT
21	GP 2 HI/+5V	OUT	46	SHUNT 2 HI (shared with Pin 35, J243 connector)	IN
22	GP 2	IN	47	SHUNT 2 LO (shared with Pin 34, J243 connector)	IN
23	GP 2 LO/GND	--	48	FADEC_CAN3_HI (GEA 24B ONLY, 010-02770-00)	IN
24	GP +5V_2	OUT	49	FADEC_CAN3_LO (GEA 24B ONLY, 010-02770-00)	IN
25	VOLTS 1	IN	50	GP +12V	OUT

A.7.2 J241 Connector

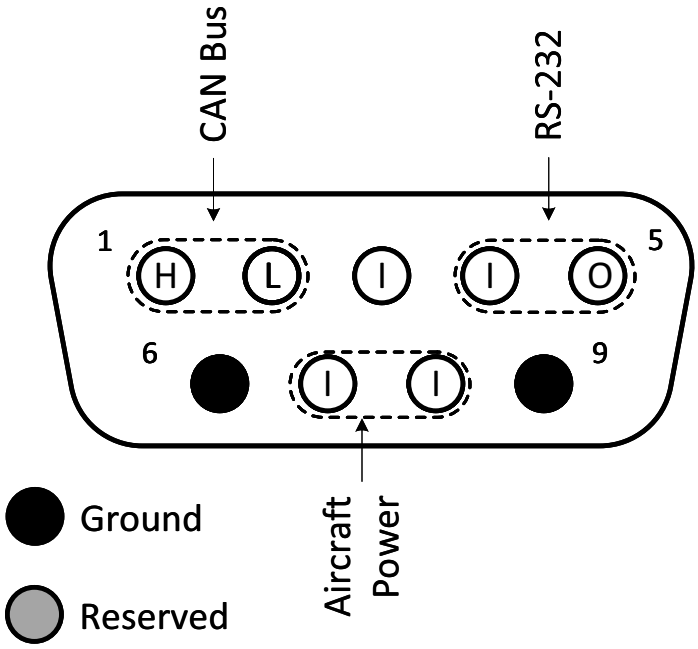

Figure A-17 J241 Connector
As Viewed Looking at Connector on Unit

Table A-61 J241 Pins

Pin	Pin Name	I/O
1	CAN HI	I/O
2	CAN LO	I/O
3	RESERVED	--
4	RS-232 IN	IN
5	RS-232 OUT	OUT
6	GROUND	--
7	AIRCRAFT POWER 1	IN
8	AIRCRAFT POWER 2	IN
9	GROUND	--

A.7.3 J242 Connector

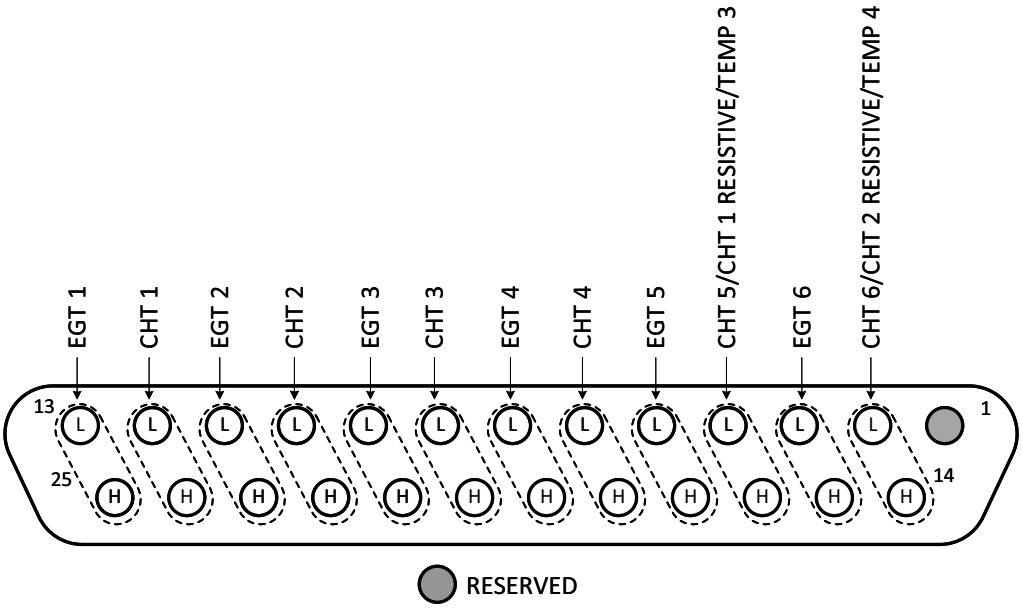

Figure A-18 J242 Connector
As Viewed Looking at Connector on Unit

Table A-62 GEA 24 J242 Connector

Pin	Pin Name	I/O
1	RESERVED	--
2	CHT6 LO/CHT 2 RESISTIVE LO/TEMP 4 LO	IN
3	EGT6 LO/TEMP 6 LO	IN
4	CHT5 LO/CHT 1 RESISTIVE LO/TEMP 3 LO	IN
5	EGT5 LO/TEMP 5 LO IN	IN
6	CHT4 LO	IN
7	EGT4 LO	IN
8	CHT3 LO	IN
9	EGT3 LO	IN
10	CHT2 LO	IN
11	EGT2 LO	IN
12	CHT1 LO	IN
13	EGT1 LO	IN
14	CHT6 HI/CHT 2 RESISTIVE HI/TEMP 4 HI	IN
15	EGT6 HI/TEMP 6 HI	IN
16	CHT5/CHT 1 RESISTIVE HI/TEMP 3 HI	IN
17	EGT5 HI/TEMP 5 HI	IN
18	CHT4 HI	IN
19	EGT4 HI	IN
20	CHT3 HI	IN
21	EGT3 HI	IN
22	CHT2 HI	IN
23	EGT2 HI	IN
24	CHT1 HI	IN
25	EGT1 HI	IN

A.7.4 J243 Connector

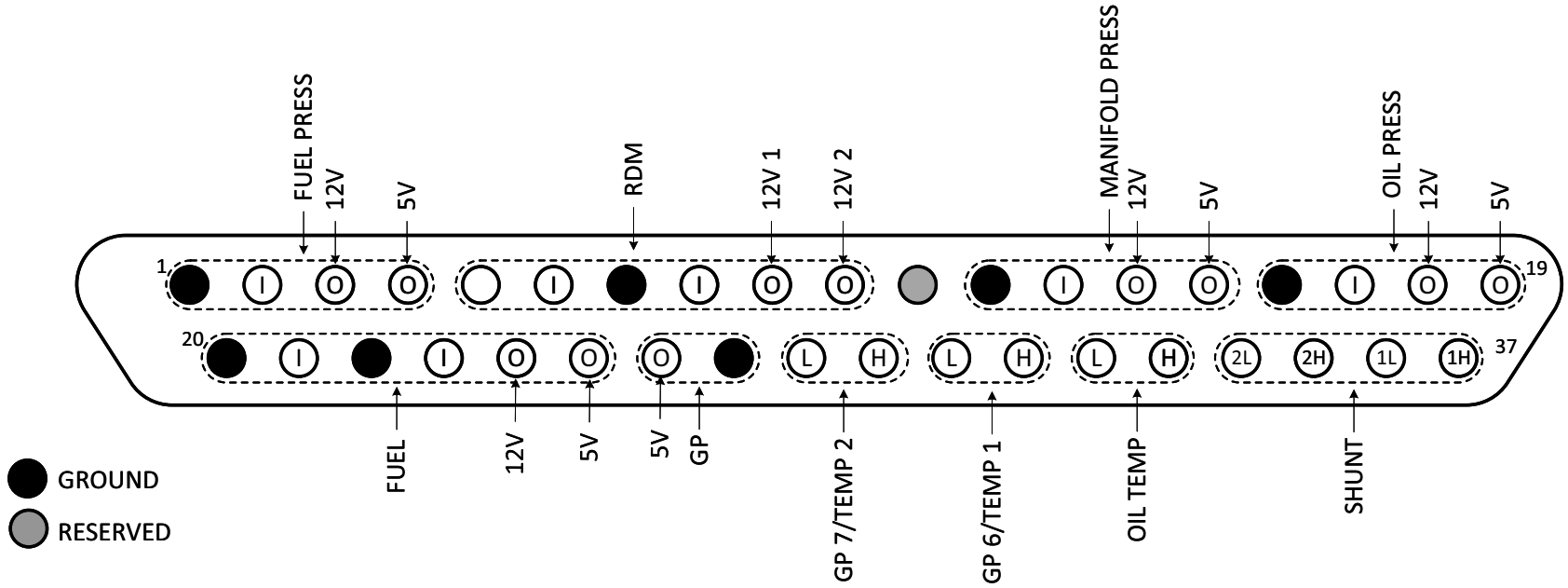

Figure A-19 J243 Connector
As Viewed Looking at Connector on Unit

Table A-63 GEA 24 J243 Connector

Pin	Pin Name	I/O
1	FUEL PRESS GND	--
2	FUEL PRESS	In
3	FUEL PRESS XDCR +12V	Out
4	FUEL PRESS XDCR +5V	Out
5	RPM XDCR GND_2	--
6	RPM 2	In
7	RPM XDCR GND_1	--
8	RPM 1	In
9	RPM XDCR +12V_1	Out
10	RPM XDCR +12V_2	Out
11	RESERVED/SPARE	--
12	MANIFOLD PRESS GND	--
13	MANIFOLD PRESS	In
14	MANIFOLD PRESS XDCR +12V	Out
15	MANIFOLD PRESS XDCR +5V	Out
16	OIL PRESS GND	--
17	OIL PRESS HI	In
18	OIL PRESS XDCR +12V	Out
19	OIL PRESS XDCR +5V	Out
20	FUEL XDCR GND_1	--
21	FUEL RETURN (shared w/Pin 37, J244 connector)	In
22	FUEL XDCR GND_2	--
23	FUEL FLOW (shared with Pin 36, J244 connector)	In
24	FUEL XDCR +12V_1	Out
25	FUEL XDCR +12V_2	Out
26	GP +5V_1	Out
27	GP GND_1	--
28	GP 7/TEMP 2 LO	In
29	GP 7/TEMP 2 HI	In
30	GP 6/TEMP 1 LO	In
31	GP 6/TEMP 1 HI	In
32	OIL TEMP LO	In
33	OIL TEMP HI	In
34	SHUNT 2 LO (shared with Pin 47, J244 connector)	In
35	SHUNT 2 HI (shared with Pin 46, J244 connector)	In
36	SHUNT 1 LO	In
37	SHUNT 1 HI	In

A.7.5 Aircraft Power

The GEA 24 has two pins for aircraft power inputs of 14/28 VDC, and can operate using power from one or both inputs (AIRCRAFT POWER 1 AND AIRCRAFT POWER 2). The pins are internally connected using diodes to prevent current from flowing between the two power inputs. AIRCRAFT POWER 2 is for connecting to an alternate power source, such as on aircraft with two electrical buses. The two aircraft power inputs may optionally be used to monitor aircraft bus voltage. Refer to section 5.5.2.2.8.1 for configuration.

Table A-64 GEA 24 Aircraft Power Pins.

Pin	Pin Name	Connector	I/O
7	AIRCRAFT POWER 1	J241	IN
8	AIRCRAFT POWER 2	J241	IN
6	GROUND	J241	--
9	GROUND	J241	--

A.7.6 CAN Bus

All three data buses conform to the BOSCH standard for Controller Area Network 2.0-B. The buses comply with ISO 11898. Refer to section 3.2.2 for details on configuring and terminating the CAN bus. The CAN bus on J241 shall be used for communications between AXIS flight display LRUs. The FADEC CAN2 and FADEC CAN3 (GEA 24 only) bus connections on J244 shall be used to communicate with FADEC engine controllers and shall not be connected to other AXIS flight display LRUs. The FADEC CAN2 and FADEC CAN3 buses are not terminated at the unit, refer to the interconnect diagrams for how to terminate the FADEC CAN2 and FADEC CAN3 buses if used. Using the FADEC CAN3 input provides for greater system redundancy in the case of an ECU lane failure.

Table A-65 GEA 24 CAN Bus Pins

Pin	Pin Name	Connector	I/O
1	CAN HI	J241	I/O
2	CAN LO	J241	I/O
17	FADEC_CAN2_HI	J244	I/O
33	FADEC_CAN2 LO	J244	I/O
48	FADEC_CAN3_HI (GEA 24 ONLY, P/N 010-02770-00)	J244	I/O
49	FADEC_CAN3 LO (GEA 24 ONLY, P/N 010-02770-00)	J244	I/O

A.7.7 RS-232

The RS-232 channel can optionally be connected to a GDU to provide a redundant path for EIS data.

Table A-66 GEA 24 RS-232 Pins

Pin	Pin Name	Connector	I/O
4	RS-232 In	J241	IN
5	RS-232 Out	J241	OUT

A.7.8 Digital Inputs

GEA 24 digital inputs are capable of sensing either an AC voltage with a peak to peak value of greater than 1 V, or an open collector type digital input. These inputs are configured by the GDU, refer to section 5.5.

NOTE

There are two (2) Fuel Flow Input Channels (channels 1 and 2) on J243 and two (2) Fuel Flow Input Channels on connector J244. As both channel 1 inputs are connected internally, and both channel 2 inputs are connected internally, the GEA 24 effectively has only two Fuel Flow input channels. Use Channel 1 and/or Channel 2 inputs as desired, but only connect inputs from one connector (either the 37 pin connector or the 50 pin connector) for each channel.

Table A-67 GEA 24 Digital Input Pins

Pin	Pin Name	Connector	I/O
23	FUEL FLOW (shared with Pin 36, J244 connector)	J243	IN
22	FUEL XDCR GND_2	J243	--
24	FUEL XDCR +12V_1	J243	OUT
21	FUEL RETURN (shared w/Pin 37, J244 connector)	J243	IN
20	FUEL XDCR GND_1	J243	--
34	FUEL XDCR +12V_3	J244	OUT
36	FUEL FLOW (shared with Pin 23, J243 connector)	J244	IN
38	FUEL XDCR GND_3	J244	--
35	FUEL XDCR +12V_4	J244	OUT
37	FUEL RETURN (shared with Pin 21, J243 connector)	J244	IN
39	FUEL XDCR GND_4	J244	--
8	RPM 1	J243	IN
7	RPM XDCR GND_1	J243	--
6	RPM 2	J243	IN
5	RPM XDCR GND_2	J243	--
9	RPM XDCR +12V_1	J243	OUT
10	RPM XDCR +12V_2	J243	OUT
5	FUEL QTY +5V_1	J244	OUT
6	FUEL QTY 1	J244	IN
7	FUEL QTY 1 GND	J244	--
8	FUEL QTY +5V_2	J244	OUT
9	FUEL QTY 2	J244	IN
10	FUEL QTY 2 GND	J244	--
11	GP 3/FUEL QTY 3 HI/+5V 3	J244	OUT
12	GP 3/FUEL QTY 3	J244	IN
13	GP 3/FUEL QTY 3 LO/GND	J244	--
14	GP 4/FUEL QTY 4 HI/+5V 4	J244	OUT
15	GP 4/FUEL QTY 4	J244	IN
16	GP 4/FUEL QTY 4 LO/GND	J244	--

A.7.9 Discrete Inputs

The GEA 24 has 4 configurable discrete inputs that can be used as either Active High or Active Low. When configured as Active Low, the inputs conform to the following specification:

Active: Vin < 3.5 VDC, or Rin < 375 Ω

Inactive: Vin > 8 VDC, or Rin > 100 kΩ

When configured as Active High the inputs conform to the following specification:

Active: Vin > 8 VDC, or Rin > 100 kΩ

Inactive: Vin < 3.5 VDC, or Rin < 375 Ω

The GP1-GP7 inputs and the RPM2 input may also be used as additional discrete inputs. If GP6 or GP7 are used for this purpose, the corresponding GP6 LO or GP7 LO pin must also be connected to ground. Refer to section A.7.12).

The GP1-GP7 inputs may also be used as additional discrete inputs. When configured as an Active Low discrete input, the GP1-GP7 inputs require an additional pull-up resistor.

Table A-68 GEA 24 Discrete Input Pins

Pin	Pin Name	Connector	I/O
40	DISCRETE IN 1	J244	IN
41	DISCRETE IN 2	J244	IN
42	DISCRETE IN 3	J244	IN
43	DISCRETE IN 4	J244	IN

A.7.10 Discrete Outputs

The GEA 24 has 2 annunciator outputs, these outputs do not require any configuration and can be optionally wired to an external annunciator. Discrete Out 1 acts as a master warning annunciator and is active any time a warning CAS message (red alert) is displayed on the PFD. Discrete Out 2 acts as a master caution annunciator and is active any time a caution CAS message (Yellow Alert) is displayed on the PFD. Reference appendix B for wiring guidance.

DISCRETE OUT 1 is “master warning” - goes low when a red (warning) CAS alert is active.

DISCRETE OUT 2 is “master caution” - goes low when a yellow (caution) CAS alert is active.

The two states of these outputs are as follows:

INACTIVE: Floating (can be pulled up to externally sourced Vout in the range 0 ≤ Vout ≤ 33 VDC)

Leakage current in the INACTIVE state is typically ≤ 10 uA to ground

ACTIVE: Vout ≤ 0.5 VDC with ≤ 20 mA sink current

Sink current must be externally limited to 20 mA max

If two EIS LRUs are configured, use annunciator outputs on EIS LRU#1 only

Table A-69 GEA 24 Discrete Output Pins.

Pin	Pin Name	Connector	I/O
44	DISCRETE OUT 1/MASTER WARNING	J244	Out
45	DISCRETE OUT 2/MASTER CAUTION	J244	Out

A.7.11 Fuel Quantity

Fuel Quantity inputs have an internal pull-up resistor that can be enabled for resistive fuel sensor inputs. The inputs can also support capacitive sensors as either voltage inputs or digital inputs.

CAUTION

For installations with GEA 24(P/N 010-01042-00) LRUs, that are currently using fuel quantity sensors assigned to a resistive input on any Fuel Input, it is recommended to install 2 - 2.2 kΩ resistors in series as shown in appendix B. This is important for composite and tube-and-fabric airframes, to improve the grounding path. The additional resistors are optional for metal aircraft, and either wiring method presented is sufficient. When in-line resistors are installed, use "Voltage" configuration setting, if in-line resistors are not installed, use "Resistive" configuration setting. It is not recommended to install these resistors in a GEA24B (P/N 010-02770-00) installation, although they are acceptable if already present.

NOTE

Refer to appendix J for information regarding swapping GEA 24 and GEA 24B units.

Table A-70 GEA 24 Fuel Quantity Pins

Pin	Pin Name	Connector	I/O
5	FUEL QTY +5V_1	J244	Out
6	FUEL QTY 1	J244	In
7	FUEL QTY 1 GND	J244	--
8	FUEL QTY +5V_2	J244	Out
9	FUEL QTY 2	J244	In
10	FUEL QTY 2 GND	J244	--
11	GP 3/FUEL QTY 3 HI/+5V 3	J244	Out
12	GP 3/FUEL QTY 3	J244	In
13	GP 3/FUEL QTY 3 LO/GND	J244	--
14	GP 4/FUEL QTY 4 HI/+5V 4	J244	Out
15	GP 4/FUEL QTY 4	J244	In
16	GP 4/FUEL QTY 4 LO/GND	J244	--

A.7.12 GP Inputs

These inputs are capable of reading any voltage up to 40 VDC. The GEA 24 has seven GP inputs, labeled GP 1 through 7, each of these are paired together.

When using the GP6 and GP7 inputs for general-purpose voltage sensing (Hall-effect sensors), including position sensors and user-defined analog parameters, the corresponding GP6 LO or GP7 LO pin must be connected to ground. The GP1-GP7 inputs may also be used as additional discrete inputs. When configured as an Active Low discrete input, the GP1-GP7 inputs require an additional pull-up resistor, as shown in appendix B.

Potentiometer based sensors can be used by connecting the potentiometer across a +5 V supply and ground and reading back the center touch voltage on GP1-G7/POS1-7. Some GP inputs have multiple functions.

Table A-71 GEA 24 GP Pins

Pin	Pin Name	Connector	I/O
18	GP1 HI/+5V	J244	OUT
19	GP 1	J244	IN
20	GP1 LO/GND	J244	--
21	GP2 HI/+5V	J244	OUT
22	GP 2	J244	IN
23	GP2 LO/GND	J244	--
24	GP +5V_2	J244	OUT
26	GP GND_2	J244	--
27	GP +5V_3	J244	OUT
29	GP GND_3	J244	--
11	GP 3/FUEL QTY 3 HI/+5V 3	J244	OUT
12	GP 3/FUEL QTY 3	J244	IN
13	GP 3/FUEL QTY 3 LO/GND	J244	--
14	GP 4/FUEL QTY 4 HI/+5V 4	J244	OUT
15	GP 4/FUEL QTY 4	J244	IN
16	GP 4/FUEL QTY 4 LO/GND	J244	--
30	GP 5 HI/+5V	J244	OUT
31	GP 5	J244	IN
32	GP 5 LO/GND	J244	--
50	GP +12V	J244	OUT
31	GP 6/TEMP 1 HI	J243	IN
30	GP 6/TEMP 1 LO	J243	IN
29	GP 7/TEMP 2 HI	J243	IN
28	GP 7/TEMP 2 LO	J243	IN
26	GP +5V	J243	OUT
27	GP GND	J243	--

A.7.13 Pressure Inputs

All pressure inputs are capable of accepting input voltages of up to 40 VDC. The oil pressure input can also accommodate resistive and constant current source sensors.

Table A-72 GEA 24 Pressure Input Pins

Pin	Pin Name	Connector	I/O
1	FUEL PRESS GND	J243	--
2	FUEL PRESS	J243	IN
3	FUEL PRESS XDCR +12V	J243	OUT
4	FUEL PRESS XDCR +5V	J243	OUT
13	MANIFOLD PRESS	J243	IN
12	MANIFOLD PRESS GND	J243	--
14	MANIFOLD PRESS XDCR +12V	J243	OUT
15	MANIFOLD PRESS XDCR +5V	J243	OUT
17	OIL PRESS HI	J243	IN
16	OIL PRESS GND	J243	--
18	OIL PRESS XDCR +12V	J243	OUT
19	OIL PRESS XDCR +5V	J243	OUT

A.7.14 Voltage Inputs

The two bus voltage inputs are capable of accepting voltages of up to 40 VDC.

Table A-73 GEA 24 Voltage Input Pins

Pin	Pin Name	Connector	I/O
25	VOLTS 1	J244	IN
28	VOLTS 2	J244	IN

A.7.15 Shunt

Shunt Channel 2, has two inputs (either pin 34 and 35 of the J243 or pin 46 and 47 of the J244) for the single channel. Use the inputs from one connector (J243 or J244) only.

Table A-74 GEA 24 Shunt Pins

Pin	Pin Name	Connector	I/O
37	SHUNT 1 HI	J243	IN
36	SHUNT 1 LO	J243	IN
35	SHUNT 2 HI*	J243	IN
34	SHUNT 2 LO*	J243	IN
46	SHUNT 2 HI*	J244	IN
47	SHUNT 2 LO*	J244	IN

A.7.16 System ID

Pins 1 and 2 must be left open (floating) for a single GEA 24 installation. When using a GEA 24 and GSU 73 in the same system, pins 1 and 2 should be connected together in order to configure the GEA 24 as the EIS #2 LRU. If two GEA 24s are installed, connect pins 1 and 2 on the second GEA 24 together in order to configure it as the EIS #2 LRU.

When using two GEA 24 units to monitor a single engine with more than 6 cylinders, connect cylinders 1-6 to the CHT/EGT 1-6 inputs on GEA 24 #1, and cylinders 7-12 to the CHT/EGT 1-6 inputs on GEA 24 #2.

When using two GEA 24 units to monitor twin engines (or a larger than normal single engine), connect pins 1 and 2 on the second GEA 24 to configure it as the EIS #2 LRU.

Table A-75 GEA 24 System ID Pins

Pin	Pin Name	Connector	I/O
1	SYSTEM ID 1A	J244	In
2	SYSTEM ID 1B/GND	J244	--

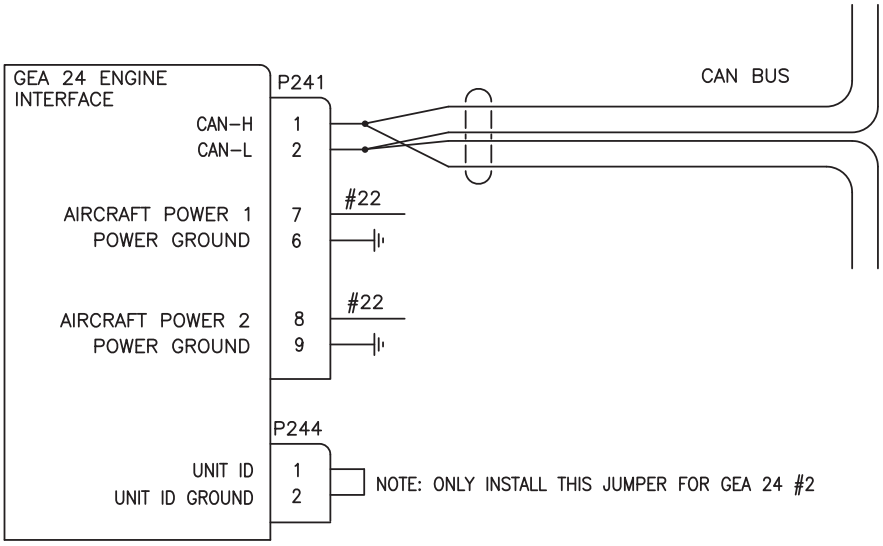

Figure A-20 GEA 24 EIS #2 Configuration

A.7.17 Temperature Inputs

Some thermocouple inputs are multi-purpose capable and have several configuration options. CHT5/CHT6, GP 6/GP 7, TEMP 1/TEMP 2/TEMP 3/TEMP 4, and Oil Temp can be used for resistive based temperature sensors. TEMP 3/4 are unavailable if CHT 5/6 are in use for CHT. TEMP 5/6 are unavailable if EGT 5/6 are in use for EGT. TEMP 5/6 support thermocouples only.

NOTE

If installing an ungrounded thermocouple to an Analog In input, a DC reference must be added to the LO input. This can be accomplished by adding a resistance of 1 MΩ or less between ground and the Analog In LO input the ungrounded thermocouple is installed on.

Table A-76 GEA 24 Temperature Input Pins

Pin	Pin Name	Connector	I/O
24	CHT1 HI	J242	IN
12	CHT1 LO	J242	IN
22	CHT2 HI	J242	IN
10	CHT2 LO	J242	IN
20	CHT3 HI	J242	IN
8	CHT3 LO	J242	IN
18	CHT4 HI	J242	IN
6	CHT4 LO	J242	IN
16	CHT5 HI/CHT 1 RESISTIVE HI/TEMP 3 HI	J242	IN
4	CHT5 LO/CHT 1 RESISTIVE LO/TEMP 3 LO	J242	IN
14	CHT6 HI/CHT 2 RESISTIVE HI/TEMP 4 HI	J242	IN
2	CHT6 LO/CHT 2 RESISTIVE LO/TEMP 4 LO	J242	IN
25	EGT1 HI	J242	IN
13	EGT1 LO	J242	IN
23	EGT2 HI	J242	IN
11	EGT2 LO	J242	IN
21	EGT3 HI	J242	IN
9	EGT3 LO	J242	IN
19	EGT4 HI	J242	IN
7	EGT4 LO	J242	IN
17	EGT5 HI/TEMP 5 HI	J242	IN
5	EGT5 LO/TEMP 5 LO	J242	IN
15	EGT6 HI/TEMP 6 HI	J242	IN
3	EGT6 LO/TEMP 6 LO IN	J242	IN
31	GP 6/TEMP 1 HI	J243	IN
30	GP 6/TEMP 1 LO	J243	IN
29	GP 7/TEMP 2 HI	J243	IN
28	GP 7/TEMP 2 LO	J243	IN
33	OIL TEMP HI	J243	IN
32	OIL TEMP LO	J243	IN

NOTE

The pinout of J242 is compatible with 25-pin thermocouple wiring harnesses used in some third-party EIS systems.

A.7.18 Transducer Output Power

The GEA 24 supplies output power for engine/airframe sensors that may require supply voltage excitation. The GEA 24 outputs voltage levels of +5 and +12 VDC. Each output can supply a maximum of 50 mA. If more than 50 mA is needed for a sensor, 3 outputs of the same voltage may be spliced together to allow an output current of up to 100 mA. Transducers that require more current (such as Princeton capacitive fuel quantity converters) must be supplied from aircraft power instead of GEA 24 transducer power output pins.

The transducer output pins are listed in the following table. Additionally, the pins are also listed in the tables for their respective default functionality.

Table A-77 GEA 24 Transducer Output Power Pins

Pin	Pin Name	Connector	I/O
3	FUEL PRESS XDCR +12V	J243	OUT
4	FUEL PRESS XDCR +5V	J243	OUT
9	RPM XDCR +12V_1	J243	OUT
10	RPM XDCR +12V_2	J243	OUT
14	MANIFOLD PRESS XDCR +12V	J243	OUT
15	MANIFOLD PRESS XDCR +5V	J243	OUT
18	OIL PRESS XDCR +12V	J243	OUT
19	OIL PRESS XDCR +5V	J243	OUT
24	FUEL XDCR +12V_1	J243	OUT
25	FUEL XDCR +12V_2	J243	OUT
26	GP +5V_1	J243	OUT
5	FUEL QTY +5V_1	J244	OUT
8	FUEL QTY +5V_2	J244	OUT
11	GP 3/FUEL QYT 3 HI/+5V 3	J244	OUT
14	GP 4/FUEL QTY 4 HI/+5V 4	J244	OUT
18	GP1 HI/+5V	J244	OUT
21	GP2 HI/+5V	J244	OUT
24	GP +5V_2	J244	OUT
27	GP +5V_3	J244	OUT
30	GP 5 HI/+5V	J244	OUT
34	FUEL XDCR +12V_3	J244	OUT
35	FUEL XDCR +12V_4	J244	OUT
50	GP +12V	J244	OUT

A.8 GMC 507 (AFCS Mode Controller)

A.8.1 J5701 Connector

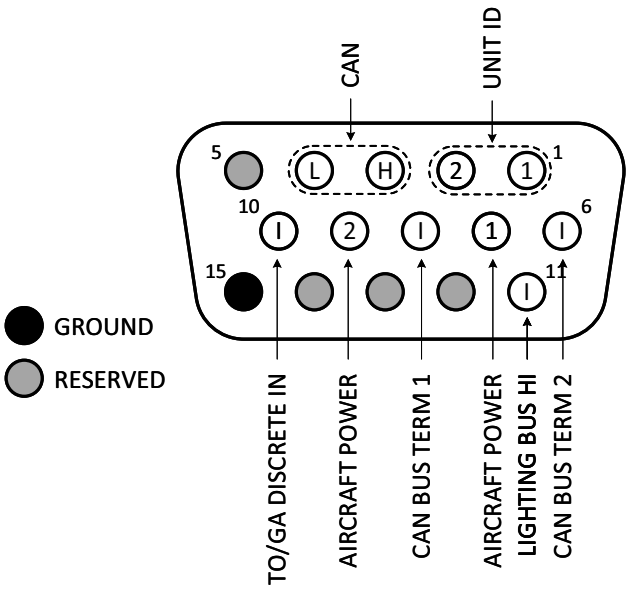

Figure A-21 J5701 Connector

Table A-78 J5701 Pins

Pin	Pin Name	I/O
1	UNIT ID 1	IN
2	UNIT ID 2	IN
3	CAN HI	I/O
4	CAN LO	I/O
5	RESERVED	--
6	CAN BUS TERM 2	--
7	AIRCRAFT POWER 1	IN
8	CAN BUS TERM 1	--
9	AIRCRAFT POWER 2	IN
10	TO/GA DISCRETE IN	IN
11	LIGHTING BUS HI	IN
12	RESERVED	--
13	RESERVED	--
14	RESERVED	--
15	POWER GROUND	--

A.8.2 Power

This section covers the power input requirements. The GMC 507 is compatible with 14V and 28V systems. AIRCRAFT POWER 1 and AIRCRAFT POWER 2 are “diode ORed” to provide power redundancy.

Table A-79 GMC 507 Power Pins

Pin	Pin Name	Connector	I/O
7	AIRCRAFT POWER 1	J7001	IN
9	AIRCRAFT POWER 2	J7001	IN
15	POWER GROUND	J7001	--

A.8.3 CAN Bus

The AXIS CAN bus conforms to the BOSCH standard for Controller Area Network 2.0-B and ISO 11898. Refer to section 3.2.2 for details. To enable the internal CAN terminator when the GMC 507 is installed at one of the two ends of the CAN bus, a wire must be installed to short pin 6 to pin 8.

Table A-80 GMC 507 Power Pins

Pin	Pin Name	Connector	I/O
3	CAN HI	J7001	I/O
4	CAN LO	J7001	I/O
8	CAN BUS TERM 1	J7001	--
6	CAN BUS TERM 2	J7001	--

A.8.4 Lighting

The GMC 507 supports two internal backlighting buses, one for the mode (indicator) lights above the keys, and one for the key text, panel text, and knob backlighting.

Mode Indicator Backlighting - The lighting level for the mode lights (indicator triangles) above the keys is controlled by the photocell only, and is not affected by the lighting bus input (pin 11). This makes sure the mode selection lights on the panel are always visible (and are independent of the externally applied lighting bus).

Key text, panel text, and knob backlighting - The GMC 507 can be installed to use either the built-in photocell or the 14V lighting bus input for backlight control of the key text, panel text, and knob backlighting. The photocell controls all backlighting when the lighting bus input is below 1.4VDC (or unconnected). If the lighting bus input voltage is greater than 1.4VDC, the GMC 507 uses the lighting bus input voltage (1.4VDC-28.0VDC range) as a reference voltage (not power source) to adjust the backlighting for these items.

Table A-81 GMC 507 Lighting Pins

Pin	Pin Name	Connector	I/O
11	LIGHTING BUS HI	J7001	IN

A.8.5 TO/GA Discrete In

Provides an active low discrete input which may optionally be connected to a TO/GA key, refer to section B.5.

Table A-82 GMC 507 TO/GA Discrete In Pins

Pin	Pin Name	Connector	I/O
10	TO/GA DISCRETE IN	J7001	IN

A.8.6 Unit ID

To configure as GMC 507 #1, leave pins 1 and 2 open. Strap pins 1 and 2 together to configure as GMC 507 #2. GMC 507 #2 will act as a remote controller only, monitoring is turned off and the AP disconnect and TO/GA inputs are left unconnected.

Table A-83 GMC 507 Unit ID Pins

Pin	Pin Name	Connector	I/O
1	UNIT ID 1	J7001	IN
2	UNIT ID 2	J7001	IN

A.9 GSA 28 (Autopilot Servo)

A.9.1 J281 Connector

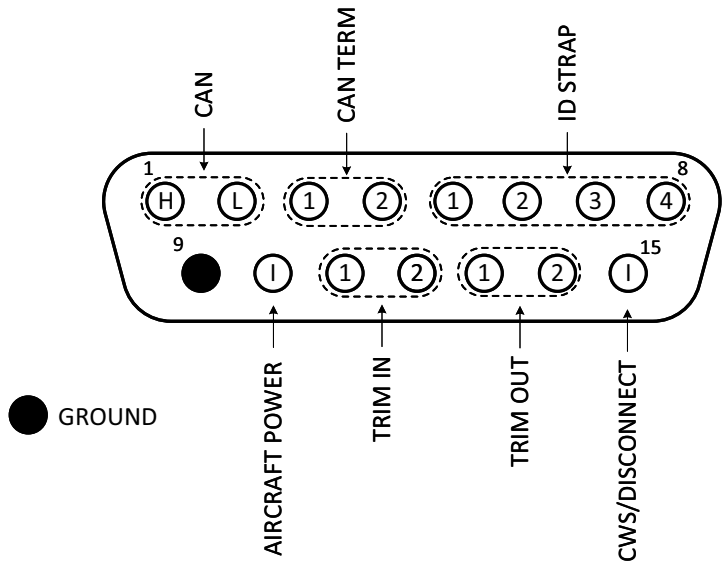

Figure A-22 J281 Connector
View Looking at Connector on Unit

Table A-84 J281 on GSA 28

Pin	Pin Name	I/O
1	CAN_H	I/O
2	CAN_L	I/O
3	CAN_TERM_1	--
4	CAN_TERM_2	--
5	ID_STRAP_1	IN
6	ID_STRAP_2	IN
7	ID_STRAP_3/(RS-232 Out for Roll Servo Only)	IN
8	ID_STRAP_4/(RS-232 In for Roll Servo Only)	IN
9	AIRCRAFT GOUND	--
10	AIRCRAFT POWER	IN
11	TRIM_IN_1	IN
12	TRIM_IN_2	IN
13	TRIM_OUT_1	OUT
14	TRIM_OUT_2	OUT
15	CWS/DISCONNECT	IN

A.9.2 Power Function

Supply voltage (14/28 VDC) inputs.

Table A-85 GSA 28 Power Pins

Pin	Pin Name	Connector	I/O
10	AIRCRAFT POWER	J281	IN
9	AIRCRAFT GROUND	J281	--

A.9.3 CWS/Disconnect

CWS/Disconnect should be connected to an active low push-button switch that disengages the autopilot, and optionally engages it, if configured. Press and hold the switch to allow for control wheel steering by disengaging the clutch and servo motor. The CWS/Disconnect input must be connected to both the pitch and the roll servos, and can optionally be connected to the yaw damper servo.

Table A-86 GSA 28 CWS/Disconnect Pins

Pin	Pin Name	Connector	I/O
15	CWS/DISCONNECT	J281	IN

A.9.4 CAN Bus

This data bus conforms to the BOSCH standard for Controller Area Network 2.0-B. This bus complies with ISO 11898. Refer to section 3.2.2 for CAN Bus details.

Table A-87 GSA 28 CAN Bus Pins

Pin	Pin Name	Connector	I/O
1	CAN_H	J281	I/O
2	CAN_L	J281	I/O
3	CAN_TERM_1	J281	--
4	CAN_TERM_2	J281	--

A.9.5 ID Strap

The ID Strap inputs are used to configure the GSA 28 as a roll, roll trim, pitch, pitch trim, or yaw servo by installing a jumper wire or not installing a jumper wire per the following:

- Roll Servo: No jumper wire installed
- Pitch Servo: Jumper wire installed from pin 5 to pin 8
- Yaw Servo: Jumper wire installed from pin 6 to pin 7
- Roll Trim: Jumper wire installed from pin 5 to pin 8 and from pin 6 to 7
- Pitch Trim: Jumper wire installed from pin 7 to pin 8

Table A-88 GSA 28 ID Strap Pins

Pin	Pin Name	Connector	I/O
5	ID_STRAP_1	J281	IN
6	ID_STRAP_2	J281	IN
7	ID_STRAP_3/(RS-232 Out for Roll Servo Only)	J281	IN
8	ID_STRAP_4/(RS-232 In for Roll Servo Only)	J281	IN

A.9.6 RS-232

Pins 7 and 8 (Out and In) connect to the GMC 30X RS232 channel 2 on the **ROLL SERVO ONLY**.

Table A-89 GSA 28 RS-232 Pins

Pin	Pin Name	Connector	I/O
7	ID_STRAP_3/(RS-232 Out for Roll Servo Only)	J281	OUT
8	ID_STRAP_4/(RS-232 In for Roll Servo Only)	J281	IN

A.9.7 Trim

The trim inputs should connect to the panel trim switch. The trim outputs should connect to the trim servo, maximum output current of the trim outputs is 1 Amp. If the GSA 28 is not powered, a fail-safe feature causes the trim inputs to connect directly to the trim outputs. If the servo is powered and configured for speed scheduling, the servo drives the trim outputs based on the trim inputs and aircraft speed. If the servo is powered with the autopilot and auto trim feature is enabled, the servo has full control of the trim outputs.

A removal adapter (GPN 011-03158-00) is provided (with each GSA 28 connector kit) that can be used when a GSA 28 is removed. The adapter keeps that node on the CAN bus in the same state as when the servo was connected (either terminated or un-terminated). The adapter also allows trim signals to pass through when the servo is removed.

Table A-90 GSA 28 Trim Pins

Pin	Pin Name	Connector	I/O
11	TRIM_IN_1	J281	IN
12	TRIM_IN_2	J281	IN
13	TRIM_OUT_1	J281	OUT
14	TRIM_OUT_2	J281	OUT

A.10 GAD 27 (Flaps/Lights/Trim Controller)

A.10.1 J271 Connector

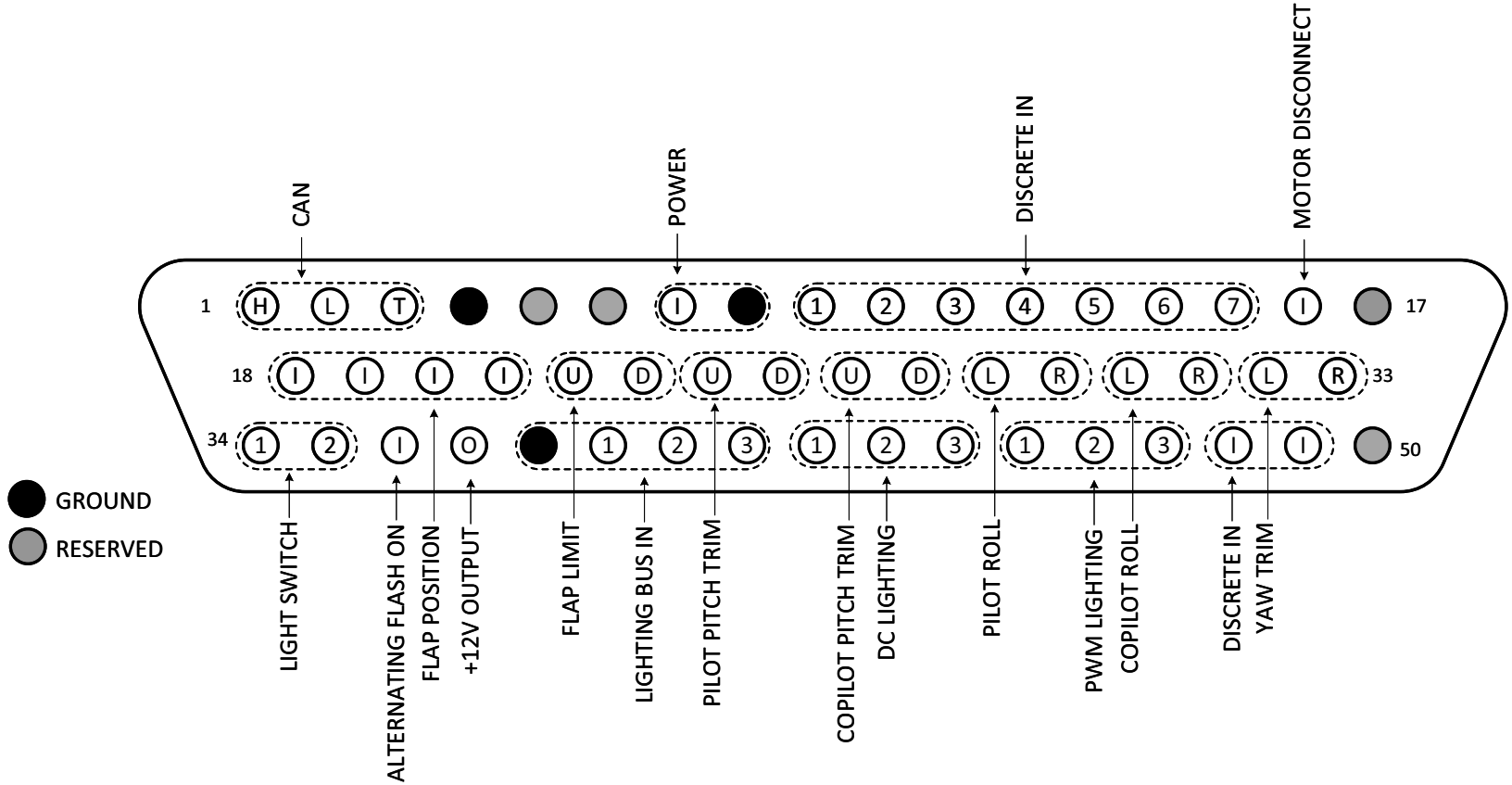

Figure A-23 J271 Connector
View Looking at Connector on Unit

Table A-91 J271 on GAD 27

Pin	Pin Name	I/O
1	CAN HI	I/O
2	CAN LO	I/O
3	CAN TERMINATE	--
4	SIGNAL GROUND	--
5	RESERVED	--
6	RESERVED	--
7	GAD 27 POWER IN	IN
8	GAD 27 POWER GND	--
9	DISCRETE IN 1**	IN
10	DISCRETE IN 2**	IN
11	DISCRETE IN 3**	IN
12	DISCRETE IN 4**	IN
13	DISCRETE IN 5**	IN
14	DISCRETE IN 6**	IN
15	DISCRETE IN 7**	IN
16	MOTOR DISCONNECT*	IN
17	RESERVED	--
18	FLAP UP 1 SWITCH/ABSOLUTE FLAP POSTION 1*	IN
19	FLAP DOWN 1 SWITCH/ABSOLUTE FLAP POSTION 2*	IN
20	FLAP UP 2 SWITCH/ABSOLUTE FLAP POSTION 3*	IN
21	FLAP DOWN 2 SWITCH/ABSOLUTE FLAP POSTION 4*	IN
22	FLAP LIMIT UP*	IN
23	FLAP LIMIT DOWN*	IN
24	PILOT PITCH TRIM UP*	IN
25	PILOT PITCH TRIM DN*	IN

Pin	Pin Name	I/O
26	COPILOT PITCH TRIM UP*	IN
27	COPILOT PITCH TRIM DN*	IN
28	PILOT ROLL TRIM L*	IN
29	PILOT ROLL TRIM R*	IN
30	COPILOT ROLL TRIM L*	IN
31	COPILOT ROLL TRIM R*	IN
32	YAW TRIM L*	IN
33	YAW TRIM R*	IN
34	LIGHT 1 SWITCH*	IN
35	LIGHT 2 SWITCH*	IN
36	ALTERNATING FLASH ON*	IN
37	+12V OUTPUT	OUT
38	LIGHTING BUS GROUND	--
39	LIGHTING CONTROL IN 1	IN
40	LIGHTING CONTROL IN 2	IN
41	LIGHTING CONTROL IN 3	IN
42	DC LIGHTING 1	OUT
43	DC LIGHTING 2	OUT
44	DC LIGHTING 3	OUT
45	PWM LIGHTING 1	OUT
46	PWM LIGHTING 2	OUT
47	PWM LIGHTING 3	OUT
48	DISCRETE IN 8**	IN
49	DISCRETE IN 9**	IN
50	RESERVED	--

*Indicates Active Low
**Can be configured as Active High or Active Low

A.10.2 J272 Connector

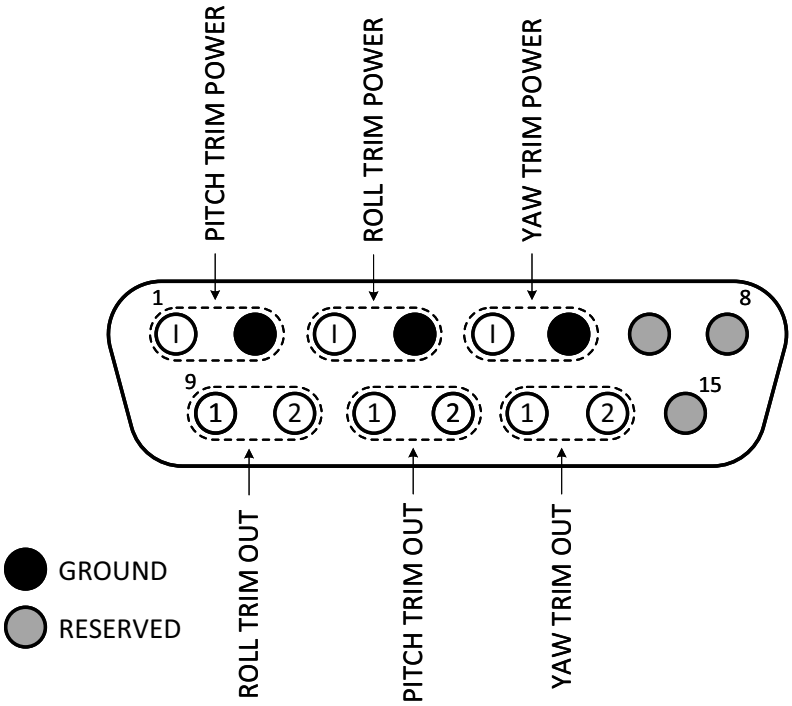

Figure A-24 J272 Connector
View Looking at Connector on Unit

Table A-92 J272 Connector

Pin	Pin Name	FUNCTION	I/O
1	PITCH TRIM POWER IN	INPUT POWER FOR TRIM MOTOR, 5 A FUSE REQUIRED	IN
2	PITCH TRIM POWER GND	GROUND RETURN FOR TRIM MOTOR, GROUND WIRE REQUIRED FOR EACH AXIS USED	--
3	ROLL TRIM POWER IN	INPUT POWER FOR TRIM MOTOR, 5 A FUSE REQUIRED	IN
4	ROLL TRIM POWER GND	GROUND RETURN FOR TRIM MOTOR, GROUND WIRE REQUIRED FOR EACH AXIS USED	--
5	YAW TRIM POWER IN	INPUT POWER FOR TRIM MOTOR, 5 A FUSE REQUIRED	IN
6	YAW TRIM POWER GND	GROUND RETURN FOR TRIM MOTOR, GROUND WIRE REQUIRED FOR EACH AXIS USED	--
7	RESERVED	N/A	--
8	RESERVED	N/A	--
9	ROLL TRIM OUT 1	5 A POWER OUTPUTS TO DRIVE MOTOR LEFT OR RIGHT	OUT
10	ROLL TRIM OUT 2		OUT
11	PITCH TRIM OUT 1	5 A POWER OUTPUTS TO DRIVE MOTOR UP OR DOWN	OUT
12	PITCH TRIM OUT 2		OUT
13	YAW TRIM OUT 1	5 A POWER OUTPUTS TO DRIVE MOTOR LEFT OR RIGHT	OUT
14	YAW TRIM OUT 2		OUT
15	RESERVED	N/A	--

A.10.3 Terminal Block (TB273) Connector

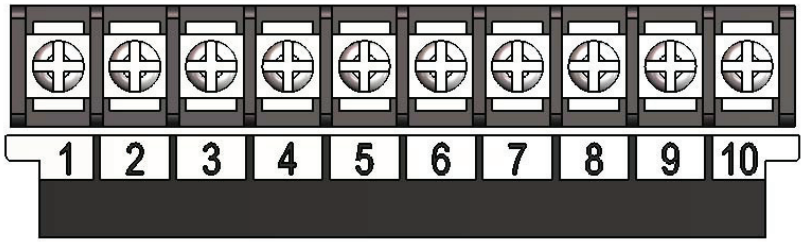

Figure A-25 TB273 on GAD 27
View Looking at Connector on Unit

Table A-93 GAD 27 TB273 Pins

Pin	Pin Name	FUNCTION	I/O
1	KEEP ALIVE POWER IN	INPUT POWER FOR “KEEP ALIVE” BUS (+5VDC INPUT MIN.)	IN
2	KEEP ALIVE POWER VOUT	OUTPUT POWER FOR “KEEP ALIVE” BUS (GREATER OF +12VDC OR INPUT POWER, 3.5 A OUTPUT MAX.)	OUT
3	LIGHT 1 POWER	INPUT FOR LIGHT 1 (FUSE TO LESSER OF 10 A OR ACTUAL LIGHT RATING)	IN
4	LIGHT 2 POWER	INPUT FOR LIGHT 2 (FUSE TO LESSER OF 10 A OR ACTUAL LIGHT RATING)	IN
5	FLAP POWER IN	INPUT FOR FLAP MOTOR (FUSE TO LESSER OF 10 A OR ACTUAL FLAP MOTOR RATING)	IN
6	FLAP POWER GROUND	GROUND RETURN FOR FLAP MOTOR CURRENT, MUST HAVE DEDICATED GROUND WIRE	--
7	FLAP POWER OUT 1	10 A POWER OUTPUTS TO DRIVE MOTOR UP OR DOWN	OUT
8	FLAP POWER OUT 2		OUT
9	LIGHT 1 OUTPUT	10 A ACTIVE HIGH POWER OUTPUT FOR LIGHT 1	OUT
10	LIGHT 2 OUTPUT	10 A ACTIVE HIGH POWER OUTPUT FOR LIGHT 2	OUT

NOTE

Keep Alive Power In (Pin 1, TB273) can be used as a second power input for the GAD 27.

NOTE

The Keep Alive Power VOut output is a short term voltage stabilizer intended to keep essential avionics online during engine start. This output is not intended to be the only source of power for any LRU.

A.10.4 Power

GAD 27 POWER IN (+14V only) is the GAD 27 unit power input and is internally diode OR'd with the Keep Alive bus (TB273) to provide power redundancy.

Table A-94 GAD 27 Power Pins

Pin	Pin Name	Connector	I/O
7	GAD 27 POWER IN	J271	IN
8	GAD 27 POWER GND	J271	--

A.10.5 CAN Bus

The CAN Bus conforms to the BOSCH standard for Controller Area Network 2.0-B, and complies with ISO 11898. Pin 3 is used to terminate the CAN bus (only if a CAN termination adapter is not used as shown in section 3.2.2). To terminate the CAN bus at the GAD 27 short the pins (2 and 3) together. Refer to section 3.2.2 for details on configuring and terminating the CAN bus.

Table A-95 GAD 27 CAN Bus Pins

Pin	Pin Name	Connector	I/O
1	CAN HI	J271	I/O
2	CAN LO	J271	I/O
3	CAN TERMINATE	J271	--

A.10.6 Discrete Inputs

The GAD 27 has nine discrete inputs that can be configured as Active Low or Active High. The GAD 27 discrete inputs conform to the following specification:

Low: Vin < 3.5 VDC, or Rin < 375 Ω
High: Vin > 8 VDC, or Rin > 100k Ω

Note that a floating (disconnected) input on Discrete Inputs 1-7 will be treated as high, while a floating input on discrete inputs 8-9 will be treated as Low.

Table A-96 GAD 27 Discrete Input Pins

Pin	Pin Name	Connector	I/O
9	DISCRETE IN 1	J271	IN
10	DISCRETE IN 2	J271	IN
11	DISCRETE IN 3	J271	IN
12	DISCRETE IN 4	J271	IN
13	DISCRETE IN 5	J271	IN
14	DISCRETE IN 6	J271	IN
15	DISCRETE IN 7	J271	IN
48	DISCRETE IN 8	J271	IN
49	DISCRETE IN 9	J271	IN

A.10.7 Flap Inputs

The GAD 27 has four active low Flap discrete inputs that allow for manual control of flap motors. Flap Limit Up and Flap Limit Down switches (optional) can be used to indicate point of maximum travel. A GEA 24 engine interface module or GSU 73 must be used to monitor a flap position sensor if predefined positions are to be used.

These active-low discrete inputs conform to the following specification:
Low: Vin < 3.5 VDC, or Rin < 375 Ω (input active)
High: Vin > 8 VDC, or Rin > 100k Ω (input inactive)

The Flap Configuration page (section 5.4.16) allows the four flap discrete inputs to be defined in two ways. In Relative Position mode, the switch up/switch down flap motion is relative to the last position and there are optional speed constraints on partial/full flap deployment. When an installation is configured for both pilot/copilot switches, pilot switches (#1 switches) take priority over copilot switches when they disagree unless pilot switches are both inactive. In Absolute Position mode, the flaps move to one of four absolute positions in response to an active low on the flap discrete inputs, and there are no speed constraints.

The GAD 27 wiring examples in section B.6 show one example of a Relative Position installation and three examples of Absolute Position installations.

Table A-97 GAD 27 Relative Flap Position Inputs

Pin	Pin Name	Connector	I/O
18	FLAP UP 1 SWITCH	J271	IN
19	FLAP DOWN 1 SWITCH	J271	IN
20	FLAP UP 2 SWITCH	J271	IN
21	FLAP DOWN 2 SWITCH	J271	IN
22	FLAP LIMIT UP	J271	IN
23	FLAP LIMIT DOWN	J271	IN

Table A-98 GAD 27 Absolute Flap Position Inputs

Pin	Pin Name	Connector	I/O
18	ABSOLUTE POSITION 1	J271	IN
19	ABSOLUTE POSITION 2	J271	IN
20	ABSOLUTE POSITION 3	J271	IN
21	ABSOLUTE POSITION 4	J271	IN
22	FLAP LIMIT UP	J271	IN
23	FLAP LIMIT DOWN	J271	IN

A.10.8 Lighting Bus

The GAD 27 can monitor from one to three lighting bus control inputs, supply up to three DC lighting outputs, and up to three PWM lighting outputs. The +12V OUTPUT pin can be used to provide supply voltage for potentiometer inputs used to vary the lighting bus outputs. The DC Lighting outputs provide a reference voltage only, 10mA max, and do not power lights. Attempting to source more than 10 mA of current from these DC reference outputs may damage them.

The DC Lighting outputs are a variable DC voltage (output voltage is based on the lighting control input voltage) that is used to vary the brightness of the lighting.

The PWM lighting outputs (pins 45, 46, 47) are active low, and can sink a maximum of 500 mA average current. The pulse width modulation (PWM) of the output signal (square wave) is varied to control the brightness of the lighting.

Table A-99 GAD 27 J271 Lighting Bus Inputs

Pin	Pin Name	I/O
38	LIGHTING BUS GROUND	--
39	LIGHTING CONTROL IN 1	IN
40	LIGHTING CONTROL IN 2	IN
41	LIGHTING CONTROL IN 3	IN

Table A-100 GAD 27 J271 Lighting Bus Outputs

Pin	Pin Name	I/O
37	+12V OUTPUT	OUT
38	LIGHTING BUS GROUND	--
42	DC LIGHTING 1	OUT
43	DC LIGHTING 2	OUT
44	DC LIGHTING 3	OUT
45	PWM LIGHTING 1	OUT
46	PWM LIGHTING 2	OUT
47	PWM LIGHTING 3	OUT

A.10.9 External Lighting Discrete Inputs

The GAD 27 has three active-low discrete lighting inputs. Light 1 and Light 2 inputs can be connected to cockpit switches to control the operation of the two supported aircraft external lights. Typically these inputs are used to control one or two landing lights, or a pair of separate landing and taxi lights.

The Alternating Flash On input can optionally be used to support a cockpit switch to control the flashing behavior of the aircraft's external lights. If this input is not connected, the external lights may still be set to flash automatically based on airspeed (refer to section 5.4.17).

These active-low discrete inputs conform to the following specification:

Low: Vin < 3.5 VDC, or Rin < 375 Ω (input active)

High: Vin > 8 VDC, or Rin> 100k Ω (input inactive)

Table A-101 GAD 27 J271 External Lighting Discrete Inputs

Pin	Pin Name	I/O
34	LIGHT 2 SWITCH	IN
35	LIGHT 1 SWITCH	IN
36	ALTERNATING FLASH ON	IN

A.10.10 Motor Disconnect Input

Motor Disconnect is an active low discrete input, that when active, interrupts trim and flap movement. Connecting this input to a switch is not required, the unit will operate normally when the switch is either inactive or the input is not used.

NOTE

When Motor Disconnect is active, all trim will be reflected as inhibited in the system status menu.

The Motor Disconnect input is an active-low discrete input that conforms to the following specification:

Low: Vin < 3.5 VDC, or Rin < 375 Ω (input active, motor movement inhibited)

High: Vin >8 VDC, or Rin > 100k Ω (input inactive, motor movement allowed)

Table A-102 GAD 27 J271 Motor Disconnect Input

Pin	Pin Name	I/O
16	MOTOR DISCONNECT	IN

A.10.11 Pitch Trim Inputs

The GAD 27 has 4 active low Pitch discrete inputs that allow for manual control of pitch trim motors. Pilot switches take priority over copilot switches when they disagree unless pilot switches are both inactive. Copilot trim switches are optional.

These active-low discrete inputs conform to the following specification:

Low: Vin < 3.5 VDC, or Rin < 375 Ω (input active)

High: Vin > 8 VDC, or Rin > 100k Ω (input inactive)

Table A-103 GAD 27 J271 Pitch Trim Inputs

Pin	Pin Name	I/O
24	PILOT PITCH TRIM UP	IN
25	PILOT PITCH TRIM DN	IN
26	COPILOT PITCH TRIM UP	IN
27	COPILOT PITCH TRIM DN	IN

A.10.12 Roll Trim Inputs

The GAD 27 has four active low Roll discrete inputs. Pilot switches take priority over copilot switches when they disagree unless pilot switches are both inactive. Copilot trim switches are optional.

These active-low discrete inputs conform to the following specification:

Low: Vin < 3.5 VDC, or Rin < 375 Ω (input active)

High: Vin > 8 VDC, or Rin > 100k Ω (input inactive)

Table A-104 GAD 27 J271 Roll Trim Inputs

Pin	Pin Name	I/O
28	PILOT ROLL TRIM L	IN
29	PILOT ROLL TRIM R	IN
30	COPILOT ROLL TRIM L	IN
31	COPILOT ROLL TRIM R	IN

A.10.13 Yaw Trim Inputs

The GAD 27 has two active low Yaw discrete inputs.

These active-low discrete inputs conform to the following specification:

Low: Vin < 3.5 VDC, or Rin < 375 Ω (input active)

High: Vin > 8 VDC, or Rin > 100k Ω (input inactive)

Pin	Pin Name	I/O
32	YAW TRIM L	IN
33	YAW TRIM R	IN

A.11 GAD 29/29B/29C/29D (ARINC 429 Adapter)

NOTE

References to the GAD 29 throughout this manual apply equally to the GAD 29C.
References to the GAD 29B throughout this manual apply equally to the GAD 29D.

A.11.1 J291 Connector

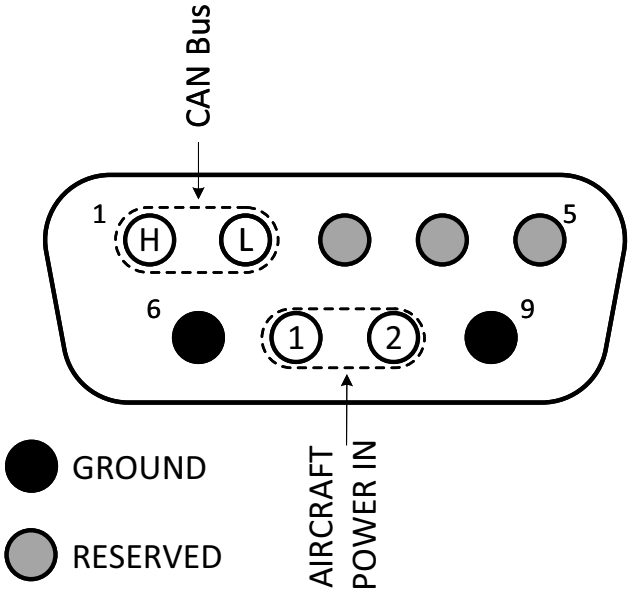

Figure A-26 J291 on GAD 29/29B/29C/29D
As Viewed Looking at Connector on Unit

Table A-105 GAD 29/29B/29C/29D

Pin	Pin Name
1	CAN HI
2	CAN LO
3	RESERVED
4	RESERVED
5	RESERVED
6	GROUND
7	AIRCRAFT POWER 1
8	AIRCRAFT POWER 2
9	GROUND

A.11.2 J292 Connector

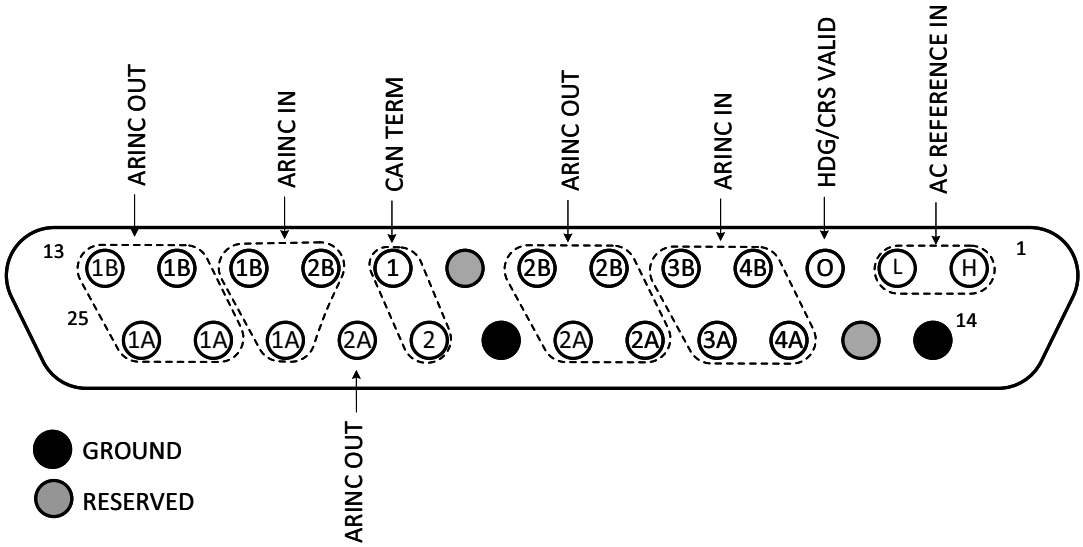

Figure A-27 J292 on GAD 29/29B/29C/29D
As Viewed Looking at Connector on Unit

Table A-106 GAD 29/29B/29C/29D J292 Connector

Pin	Pin Name	I/O	Pin	Pin Name	I/O
1	RESERVED	--	15	RESERVED	--
	AC REFERENCE HI*	IN		COURSE ERROR HI*	OUT
2	RESERVED	--	16	ARINC IN 4A	IN
	AC REFERENCE LO*	IN	17	ARINC IN 3A	IN
3	RESERVED	--	18	ARINC OUT 2A	OUT
	HDG/CRS VALID*	OUT	19		
4	ARINC IN 4B	IN	20	GROUND	--
5	ARINC IN 3B	IN		COURSE ERROR LO*	IN
6	ARINC OUT 2B	OUT	21	CAN TERM 2	--
7			22	ARINC IN 2A	IN
8	RESERVED	--	23	ARINC IN 1A	IN
	HEADING ERROR HI*	OUT	24	ARINC OUT 1A	OUT
9	CAN TERM 1	--	25		
10	ARINC IN 2B	IN			
11	ARINC IN 1B	IN			
12	ARINC OUT 1B	OUT			
13					
14	GROUND	--			
	HEADING ERROR LO*	IN			

*GAD 29B/29D only

A.11.3 Power

This section covers the power input requirements. AIRCRAFT POWER 1 and AIRCRAFT POWER 2 are "diode ORed" to provide power redundancy.

Pin	Pin Name	Connector	I/O
7	AIRCRAFT POWER 1	J291	IN
8	AIRCRAFT POWER 2	J291	IN
6	POWER GROUND	J291	--
9	POWER GROUND	J291	--

A.11.4 ARINC 429 In/Out

The ARINC 429 outputs conform to ARINC 429 electrical specifications when loaded with up to 5 standard ARINC 429 receivers. Each ARINC 429 Transmitter pin is physically connected to two DSUB pins. When running one transmitter to two receivers use two separate pins to avoid splicing wires. Running one transmitter to more than two receivers will require splicing wires.

Pin	Pin Name	Connector	I/O
23	ARINC IN 1A	J292	IN
11	ARINC IN 1B	J292	IN
24	ARINC OUT 1A	J292	OUT
25		J292	
12	ARINC OUT 1B	J292	OUT
13		J292	
22	ARINC IN 2A	J292	IN
10	ARINC IN 2B	J292	IN
18	ARINC OUT 2A	J292	OUT
19		J292	
6	ARINC OUT 2B	J292	OUT
7		J292	
17	ARINC IN 3A	J292	IN
5	ARINC IN 3B	J292	IN
16	ARINC IN 4A	J292	IN
4	ARINC IN 4B	J292	IN

A.11.5 CAN Bus

The CAN Bus conforms to the BOSCH standard for Controller Area Network 2.0-B, and complies with ISO 11898. Pins 9 and 21 are used to terminate the CAN bus. To terminate the CAN bus at the GAD 29/29B/29C/29D short the pins (9 and 21) together. Refer to section 3.2.2 for details on configuring and terminating the CAN bus.

Pin	Pin Name	Connector	I/O
1	CAN HI	J291	I/O
2	CAN LO	J291	I/O
9	CAN TERM 1	J292	--
21	CAN TERM 2	J292	--

A.12 GAP 26

The GAP 26 interfaces to the electrical system on the aircraft for power and ground, and optionally via discrete input for alerting purposes.

Refer to section 4.4.13.5 for power and ground connection information.

Refer to section 5.5.3.1 for a description of discrete input alerting options.

A.13 GHA 15 Height Advisor

A.13.1 J2001

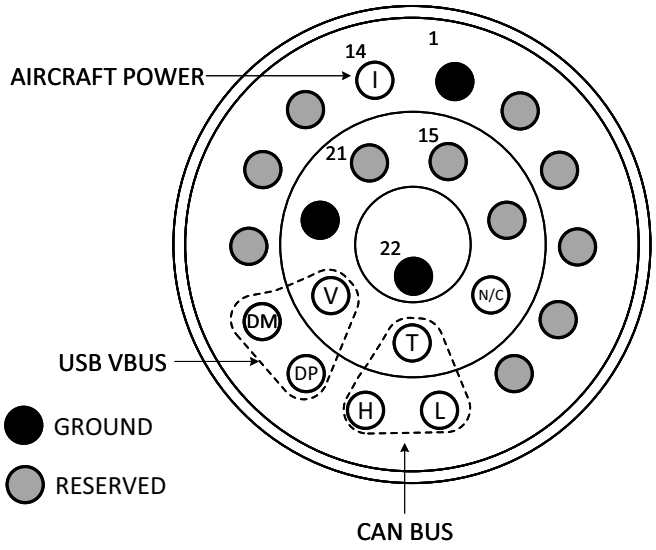

Figure A-28 View of J2001 connector
As Viewed from Front of Unit

Table A-107 GHA 15 J2001 Connector

Pin	Pin Name	Pin	Pin Name
1	POWER GROUND	12	RESERVED
2	RESERVED	13	RESERVED
3	RESERVED	14	AIRCRAFT POWER
4	RESERVED	15	RESERVED
5	RESERVED	16	RESERVED
6	RESERVED	17	N/C
7	CAN BUS LO	18	CAN BUS TERM
8	CAN BUS HI	19	USB VBUS
9	USBO DP	20	SIGNAL GROUND
10	USBO DM	21	RESERVED
11	RESERVED	22	SIGNAL GROUND

A.13.2 Power Functions

A.13.2.1 Aircraft Power

The GHA 15 height advisor provides an aircraft power input which accepts 14/28 VDC.

Table A-108 GHA 15 Aircraft Power Pins

Pin	Pin Name	I/O
14	AIRCRAFT POWER	IN
1	POWER GROUND	--

A.13.3 CAN Bus

The GHA 15 provides a CAN Bus. The CAN Bus conforms to the BOSCH standard for Controller Area Network 2.0-B and ISO 11898.

Table A-109 GHA 15 CAN Bus Pins

Pin	Pin Name	I/O
7	CAN BUS LO	I/O
8	CAN BUS HI	I/O
18	CAN BUS TERM	OUT

A.13.4 USB

The GHA 15 provides a standard Universal Serial Bus (USB) interface for unit diagnostic purposes. The USB connection is not required for normal installations. The interface is compatible with the Universal Serial Bus Version 2.0 standard for operation as a “high-speed” device.

Table A-110 GHA 15 USB Pins

Pin	Pin Name	I/O
9	USBO DP [1]	I/O
10	USBO DM [1]	I/O
19	USB VBUS [1]	IN
20	SIGNAL GROUND	--

[1] Signals have ESD (Electrostatic Discharge) protection, but no lightning protection. USB Type B Receptacle pigtail cable must be wired directly to J2001.

A.14 GI 260 (AOA Indicator)

A.14.1 Pigtail Connections

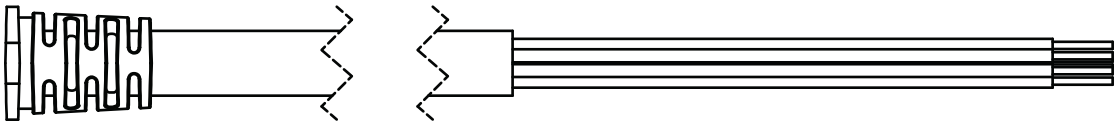

Figure A-29 GI 260 Pigtail Harness

Table A-111 GI 260 Pins

Pin Name	Wire Color	I/O
AIRCRAFT POWER	RED	IN
POWER GROUND	BLACK	--
CAN HI	BLUE	I/O
CAN LO	VIOLET	I/O
SHIELD GND	BLACK HEAT SHRINK	--
RS-232 IN	YELLOW	IN
RS-232 OUT	BROWN	OUT
DC LIGHTING BUS	GRAY	IN
RESERVED	WHITE	--
RESERVED	GREEN	--
AUDIO SHIELD	BLACK HEAT SHRINK	--

A.14.2 Power

AIRCRAFT POWER 1 and POWER GROUND are connected to a 14/28 VDC supply.

Pin Name	Wire Color	I/O
AIRCRAFT POWER 1	RED	In
POWER GROUND	BLACK	--

A.14.3 CAN Bus

The CAN Bus conforms to the BOSCH standard for Controller Area Network 2.0-B, and complies with ISO 11898. Refer to section 3.2.2 for details on wiring the CAN bus.

Pin Name	Wire Color	I/O
CAN HI	BLUE	I/O
CAN LO	VIOLET	I/O

A.14.4 RS-232 CHANNEL

The RS-232 outputs conform to EIA Standard RS-232C with an output voltage swing of at least ±5 V when driving a standard RS-232 load. This channel is not used in typical AXIS flight display installations.

Pin Name	Wire Color	I/O
RS-232 IN	YELLOW	IN
RS-232 OUT	BROWN	OUT

A.14.5 Lighting

The GI 260 display brightness can track either a 28 VDC or 14 VDC lighting bus using these inputs. If left unconnected, unit will use a photocell to adjust lighting.

Pin Name	Wire Color	I/O
DC LIGHTING BUS	GRAY	IN

A.15 GSU 75

The GSU 75 mating designator, part number, and associated connector kit are listed in table A-112.

Table A-112 GSU 75 Connector

REF. DES.	DESCRIPTION	CONN P/N	KIT P/N
J751	Conn, HD D-Sub, Male, Str, Mil Crp, Sealed, w/ GND Indents, 78 Pin	330-00776-78	011-03109-00

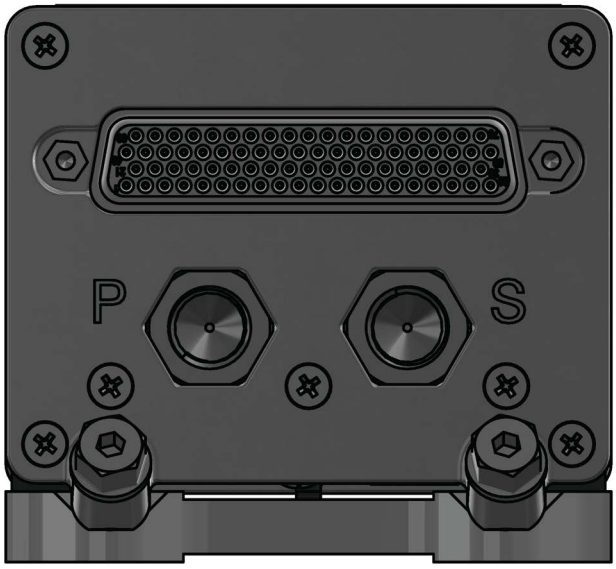

Figure A-30 GSU 75 Connector

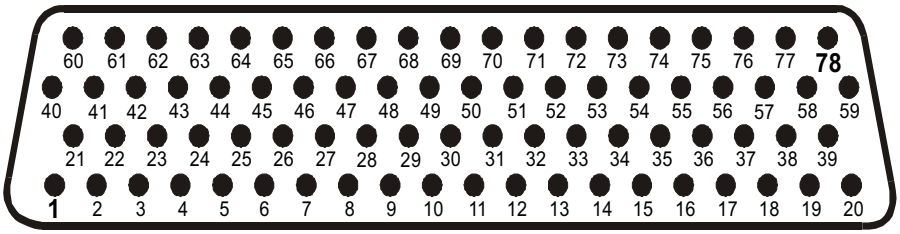

Figure A-31 GSU 75 J751 Connector

Table A-113 GSU 75 J751 Connector

Pin	Function	I/O	Pin	Function	I/O
1	ARINC 429 OUT (ADC) 1A	OUT	40	PPS IN 1 B	IN
2	ARINC 429 OUT (ADC) 1B	OUT	41	PPS IN 2 A	IN
3	ARINC 429 OUT (ADC) 2A	OUT	42	ARINC 429 IN (ADC) 1A	IN
4	OAT LO	IN	43	ARINC 429 IN (ADC) 1B	IN
5	OAT HI	IN	44	ARINC 429 IN (ADC) 2A	IN
6	OAT PWR	OUT	45	ARINC 429 IN (AHRS) 1A	IN
7	ARINC 429 OUT (ADAHRS) 1B	OUT	46	ARINC 429 IN (AHRS) 1B	IN
8	ARINC 429 OUT (ADAHRS) 3A	OUT	47	ARINC 429 IN (AHRS) 3A	IN
9	ARINC 429 OUT (ADAHRS) 3B	OUT	48	SIGNAL GND	--
10	RS-422 IN A	IN	49	ARINC 429 OUT (ADAHRS) 2A	OUT
11	RS-422 IN B	IN	50	ARINC 429 OUT (ADAHRS) 2B	OUT
12	RS-232 OUT (AHRS) 3	OUT	51	RS-232 OUT (AHRS) 1	OUT
13	MAGNETOMETER PWR OUT	OUT	52	RS-232 IN (AHRS) 1	IN
14	AIRCRAFT PWR 1	IN	53	CONFIG MODULE PWR	OUT
15	SIGNAL GND	--	54	CONFIG MODULE DATA	I/O
16	AIRCRAFT PWR 2	IN	55	CONFIG MODULE CLOCK	OUT
17	RS-232 OUT (ADC) 2	OUT	56	DISCRETE IN 1*	IN
18	RS-232 IN (ADC) 2	IN	57	SYS ID 2*	IN
19	RESERVED	I/O	58	RESERVED	IN
20	RESERVED	I/O	59	RESERVED	I/O
21	ARINC 429 OUT (ADC) 3A	OUT	60	PPS IN 1 A	IN
22	ARINC 429 OUT (ADC) 3B	OUT	61	PPS IN 2 B	IN
23	ARINC 429 OUT (ADC) 2B	OUT	62	ARINC 429 IN (ADC) 3A	IN
24	GND	--	63	ARINC 429 IN (ADC) 3B	IN
25	PPS SELECT	IN	64	ARINC 429 IN (ADC) 2B	IN
26	SIGNAL GND	--	65	ARINC 429 IN (AHRS) 2A	IN
27	ARINC 429 OUT (ADAHRS) 1A	OUT	66	ARINC 429 IN (AHRS) 2B	IN
28	ARINC 429 OUT (ADAHRS) 3A	OUT	67	ARINC 429 IN (AHRS) 3B	IN
29	ARINC 429 OUT (ADAHRS) 3B	OUT	68	RS-232 GND (ADC) 1	--
30	SIGNAL GND	--	69	RS-232 OUT (ADC) 1	OUT
31	RS-232 GND (AHRS) 3	--	70	RS-232 IN (ADC) 1	IN
32	RS-232 GND (AHRS) 1	--	71	RS-232 OUT (AHRS) 2	OUT
33	MAGNETOMETER GND	--	72	RS-232 IN (AHRS) 2	IN
34	POWER GND 1	--	73	RS-232 GND (AHRS) 2	--

35	RESERVED	--
36	POWER GND 2	--
37	RS-232 GND (ADC) 2	--
38	RESERVED	--
39	RESERVED	I/O

74	CONFIG MODULE GND	--
75	SYS ID 1*	IN
76	DISCRETE IN 3*	IN
77	DISCRETE IN 4	IN
78	DISCRETE IN 2*	IN

* Indicates Active-Low

A.16 GEA 110

The GEA 110 has two connectors. The mating designators, part numbers, and associated connector kits are listed in table A-114.

Table A-114 GEA 110 Connectors

REF. DES.	DESCRIPTION	CONN P/N	KIT P/N
P1101	Conn, Hi Dens, D-sub, Mil Crmp, 15 Ckt	330-00185-15	011-03527-50
	Conn, HD D-sub, Male, Str, Mil Crp contacts included, sealed, 15 Pin	330-01384-00	011-03527-51
P1102	Conn, Hi Dens, D-sub, Mil Crp, 78 Ckt	330-00185-75	011-03527-50
	Conn, HD D-sub, Male, Str, Mil Crp, Sealed, w/ GND Indents, 78 Pin	330-00776-78	011-03527-51

CAUTION

Ensure the 15-pin HD D-sub connector is orientated properly; if the connector is installed upside down, it can cause damage to the GEA 110.

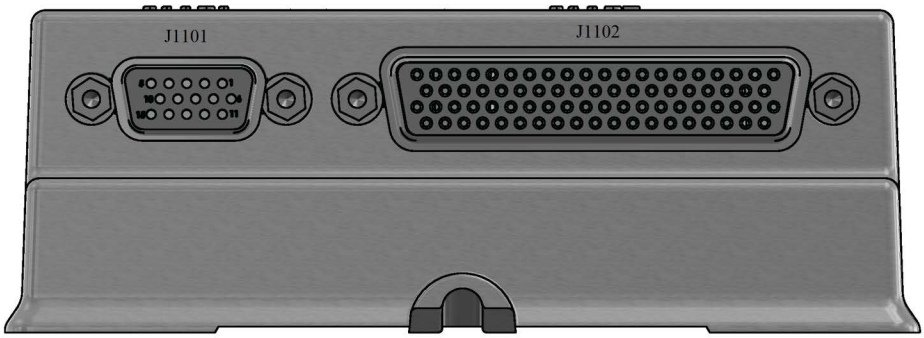

Figure A-32 GEA 110 Connectors

A.16.1 J1101 Connector

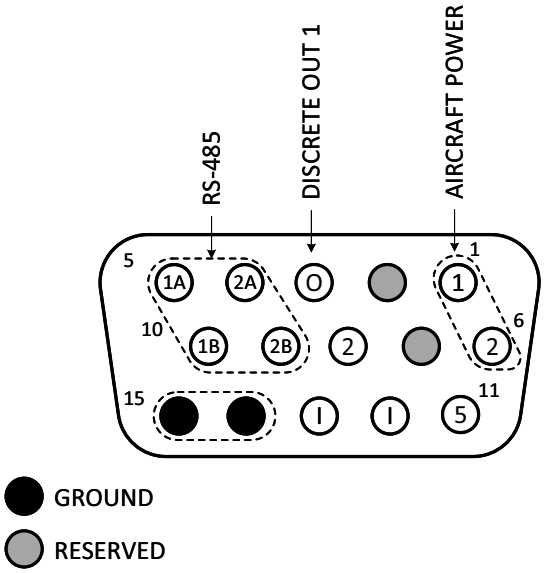

Figure A-33 J1101 Connector

Table A-115 GEA 110 J1101/P1101 Connector

Pin	Function	I/O
1	AIRCRAFT PWR 1	IN
2	RESERVED	IN
3	DISCRETE OUT 1	OUT
4	RS-485 2A	I/O
5	RS-485 1A	I/O
6	AIRCRAFT PWR 2	IN
7	RESERVED	OUT
8	DISCRETE OUT 2	OUT
9	RS-485 2B	I/O
10	RS-485 1B	I/O
11	DISCRETE IN 5*	IN
12	SYS ID #1	IN
13	SYS ID #2	IN
14	POWER GND	--
15	POWER GND	--

* Indicates Active-Low

A.16.2 J1102 Connector

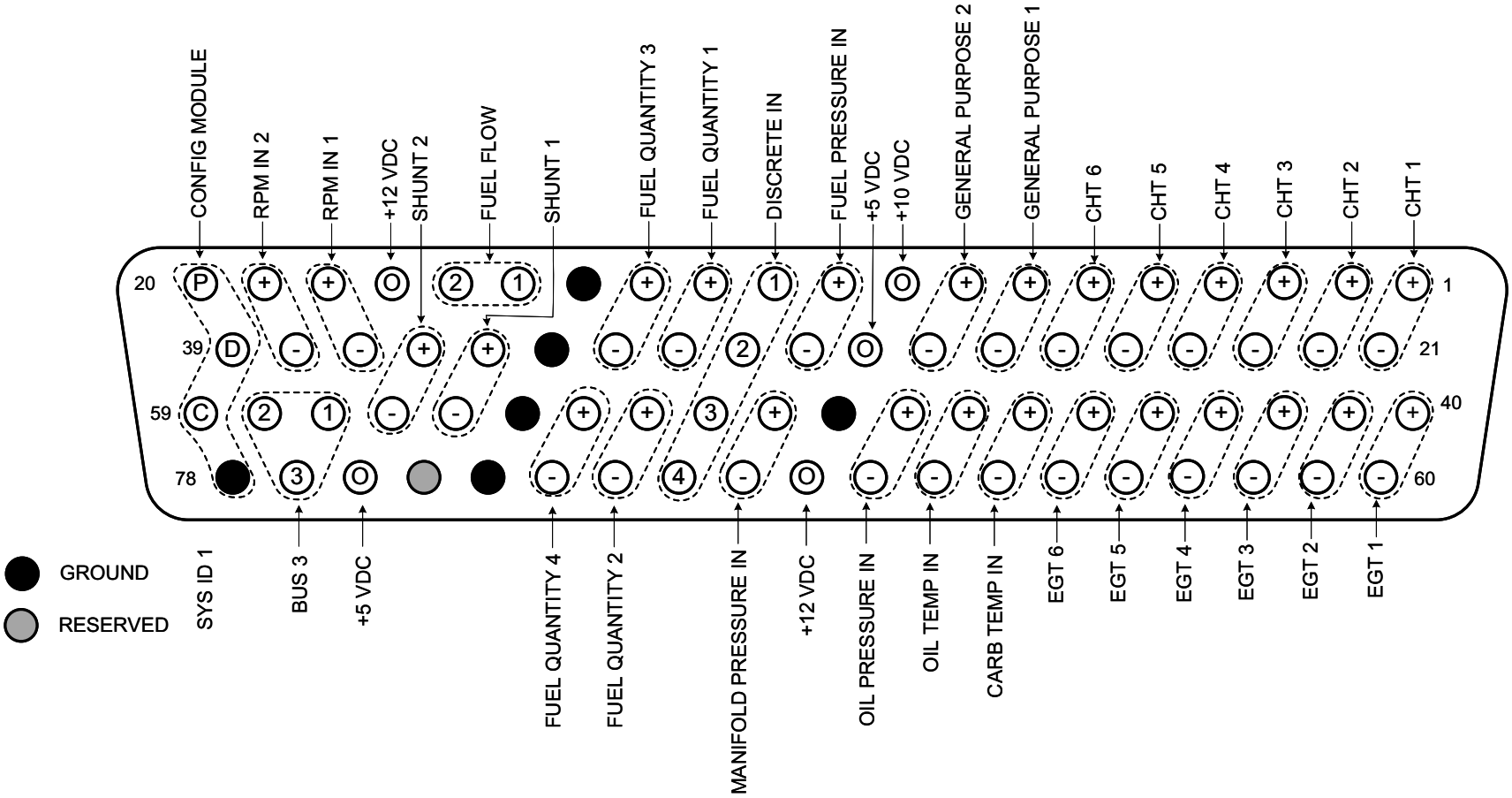

Figure A-34 J1102 Connector

Table A-116 GEA 110 J1102 Connector

Pin	Function	I/O
1	CHT 1 (+)	IN
2	CHT 2 (+)	IN
3	CHT 3 (+)	IN
4	CHT 4 (+)	IN
5	CHT 5 (+)	IN
6	CHT 6 (+)	IN
7	GENERAL PURPOSE 1 (+)	IN
8	GENERAL PURPOSE 2 (+)	IN
9	+10 VDC	OUT
10	FUEL PRESSURE (+)	IN
11	DISCRETE IN 1	IN
12	FUEL QUANTITY 1/GEN PURP 3 (+)	IN
13	FUEL QUANTITY 3/GEN PURP 5 (+)	IN
14	SIGNAL GND	IN
15	FUEL FLOW 1	IN
16	FUEL FLOW 2	IN
17	+12 VDC	OUT
18	RPM IN 1 (+)	IN
19	RPM IN 2 (+)	IN
20	CONFIG. MODULE PWR	OUT
21	CHT 1 (-)	IN
22	CHT 2 (-)	IN
23	CHT 3 (-)	IN
24	CHT 4 (-)	IN
25	CHT 5 (-)	IN
26	CHT 6 (-)	IN
27	GENERAL PURPOSE 1 (-)	IN
28	GENERAL PURPOSE 2 (-)	IN
29	+5 VDC	OUT
30	FUEL PRESSURE (-)	IN
31	DISCRETE IN 2	IN
32	FUEL QUANTITY 1/ GENERAL PURPOSE 3 (-)	IN
33	FUEL QUANTITY 3/GEN PURP 5 (-)	IN
34	SIGNAL GND	--
35	SHUNT 1 (+)	IN
36	SHUNT 2 (+)	IN
37	RPM IN 1 (-)	IN
38	RPM IN 2 (-)	IN
39	CONFIG MODULE DATA	I/O
40	EGT 1 (+)	IN
41	EGT 2 (+)	IN
42	EGT 3 (+)	IN
43	EGT 4 (+)	IN
44	EGT 5 (+)	IN
45	EGT 6 (+)	IN
46	CARB TEMP (+)	IN
47	OIL TEMP (+)	IN
48	OIL PRESSURE (+)	IN
49	SIGNAL GND	--
50	MANIFOLD PRESSURE (+)	IN
51	DISCRETE IN 3	IN
52	FUEL QUANTITY 2/GEN PURP 4 (+)	IN
53	FUEL QUANTITY 4/GEN PURP 6 (+)	IN
54	SIGNAL GND	--
55	SHUNT 1 (-)	IN
56	SHUNT 2 (-)	IN
57	BUS 1	IN
58	BUS 2	IN
59	CONFIG MODULE CLOCK	OUT
60	EGT 1 (-)	IN
61	EGT 2 (-)	IN
62	EGT 3 (-)	IN
63	EGT 4 (-)	IN
64	EGT 5 (-)	IN
65	EGT 6 (-)	IN
66	CARB TEMP (-)	IN
67	OIL TEMP (-)	IN
68	OIL PRESSURE (-)	IN
69	+12 VDC	OUT
70	MANIFOLD PRESSURE (-)	IN
71	DISCRETE IN 4	IN
72	FUEL QUANTITY 2/GEN PURP 4 (-)	IN
73	FUEL QUANTITY 4/GEN PURP 6 (-)	IN
74	SIGNAL GND	--
75	RESERVED	--
76	+5 VDC	OUT
77	BUS 3	IN
78	CONFIG MODULE GND	--

A.16.3 Power Pins

GEA 110 operates on 28 VDC or 14 VDC. After initial power on, GEA 110 will operate normally to a minimum of 11 VDC. Current draw is dependent on I/O usage and output loading, power wire gauge should be determined for each specific installation based upon these criteria.

AIRCRAFT POWER 1 and AIRCRAFT POWER 2 are “diode OR’ed” to provide power redundancy. AIRCRAFT POWER 2 connects to an alternate aircraft source (i.e., on an aircraft with two electrical buses or a display that can supply power).

Table A-117 Power Pins

PIN	PIN NAME	CONNECTOR	I/O
1	AIRCRAFT POWER 1	J1101	In
6	AIRCRAFT POWER 2	J1101	In
14	POWER GROUND 1	J1101	--
15	POWER GROUND 2	J1101	--

A.16.4 Configuration Module Pins

Installation-specific configuration information is stored in the J1102 connector backshell. This allows aircraft-specific settings to be retained independently of the GEA 110 unit, eliminating the need to reconfigure those settings if a replacement GEA 110 is installed.

Table A-118 Configuration Module Pins

PIN	PIN NAME	CONNECTOR	I/O
20	CONFIG MODULE POWER	J1102	OUT
39	CONFIG MODULE DATA	J1102	I/O
59	CONFIG MODULE CLOCK	J1102	OUT
78	CONFIG MODULE GROUND	J1102	--

A.16.5 Analog Inputs

Table A-119 Analog Inputs

PIN	PIN NAME	CONNECTOR	I/O
1	ANALOG IN 1 HI	J1102	In
21	ANALOG IN 1 LOW	J1102	In
2	ANALOG IN 2 HI	J1102	In
22	ANALOG IN 2 LOW	J1102	In
3	ANALOG IN 3 HI	J1102	In
23	ANALOG IN 3 LOW	J1102	In
4	ANALOG IN 4 HI	J1102	In
24	ANALOG IN 4 LOW	J1102	In
5	ANALOG IN 5 HI	J1102	In
25	ANALOG IN 5 LOW	J1102	In
6	ANALOG IN 6 HI	J1102	In
26	ANALOG IN 6 LOW	J1102	In
40	ANALOG IN 7 HI	J1102	In
60	ANALOG IN 7 LOW	J1102	In
41	ANALOG IN 8 HI	J1102	In
61	ANALOG IN 8 LOW	J1102	In
42	ANALOG IN 9 HI	J1102	In
62	ANALOG IN 9 LOW	J1102	In
43	ANALOG IN 10 HI	J1102	In
63	ANALOG IN 10 LOW	J1102	In
44	ANALOG IN 11 HI	J1102	In
64	ANALOG IN 11 LOW	J1102	In
45	ANALOG IN 12 HI	J1102	In
65	ANALOG IN 12 LOW	J1102	In
10	ANALOG IN 13 HI	J1102	In
30	ANALOG IN 13 LOW	J1102	In
48	ANALOG IN 14 HI	J1102	In
68	ANALOG IN 14 LOW	J1102	In
50	ANALOG IN 15 HI	J1102	In
70	ANALOG IN 15 LOW	J1102	In

A.16.6 Digital Inputs

Any digital input is configurable as a discrete input. Digital inputs are used when a frequency is needed to be measured. The input is typically connected to RPM, fuel flow, and some capacitive based fuel quantity systems.

Table A-120 Digital Inputs

PIN	PIN NAME	CONNECTOR	I/O
18	DIGITAL IN 1 HI	J1102	In
19	DIGITAL IN 2 HI	J1102	In
15	DIGITAL IN 3 HI	J1102	In
16	DIGITAL IN 4 HI	J1102	In
37	DIGITAL IN 1 LOW	J1102	In
38	DIGITAL IN 2 LOW	J1102	In

A.16.7 Analog/CCS Inputs

Analog/CCS inputs have the same capabilities as the analog inputs described in section A.16.5.

Table A-121 Analog/CCS Inputs

PIN	PIN NAME	CONNECTOR	I/O
7	ANALOG/CCS IN 1 HI	J1102	In
27	ANALOG/CCS IN 1 LOW	J1102	In
8	ANALOG/CCS IN 2 HI	J1102	In
28	ANALOG/CCS IN 2 LOW	J1102	In
46	ANALOG/CCS IN 3 HI	J1102	In
66	ANALOG/CCS IN 3 LOW	J1102	In
47	ANALOG/CCS IN 4 HI	J1102	In
67	ANALOG/CCS IN 4 LOW	J1102	In

A.16.8 Analog/CCS/Digital Inputs

Analog/CCS/digital channels are designed and tested for no arcing to any nodes internal to the GEA 110 or to any unit pins during a lightning transient. This is an additional safety requirement to support direct interface with fuel system sensors.

Table A-122 Analog/CCS/Digital Inputs

PIN	PIN NAME	CONNECTOR	I/O
12	ANALOG/CCS/DIGITAL IN 1 HI	J1102	In
32	ANALOG/CCS/DIGITAL IN 1 LOW	J1102	In
52	ANALOG/CCS/DIGITAL IN 2 HI	J1102	In
72	ANALOG/CCS/DIGITAL IN 2 LOW	J1102	In
13	ANALOG/CCS/DIGITAL IN 3 HI	J1102	In
33	ANALOG/CCS/DIGITAL IN 3 LOW	J1102	In
53	ANALOG/CCS/DIGITAL IN 4 HI	J1102	In
73	ANALOG/CCS/DIGITAL IN 4 LOW	J1102	In

A.16.9 Shunt Inputs

Shunt inputs are configured to monitor the current draw of an aircraft power bus with the use of an external sense resistor. In high side current monitor mode, the current monitor measures differential voltages in the -1.5 to +2.5 V range with a common mode voltage of ±80 V.

Table A-123 Current Monitor Inputs

PIN	PIN NAME	CONNECTOR	I/O
35	CURRENT MONITOR IN 1 HI	J1102	In
55	CURRENT MONITOR IN 1 LOW	J1102	In
36	CURRENT MONITOR IN 2 HI	J1102	In
56	CURRENT MONITOR IN 2 LOW	J1102	In

A.16.10 Discrete Outputs

Discrete outputs are active low type discrete outputs that present a high impedance (110 kilohm) in an inactive state.

When active the outputs sink up to 500 mA in the active state with a voltage drop of 0.5 VDC or less. Include an inline resistor to ensure the current remains below 500 mA.

Table A-124 Discrete Outputs

PIN	PIN NAME	CONNECTOR	I/O
3	DISCRETE OUT 1	J1101	OUT
8	DISCRETE OUT 2	J1101	OUT

A.16.11 Configurable Discrete Inputs

Configurable discrete inputs can be individually configured as active high or active low type.

When configured for the active low state, a voltage of 0 to 3.5 V, or a resistance of less than 375 ohm to ground, is considered an active signal. A voltage of 8 V to 36 V or a resistance of greater than 100 kilohm is considered an Inactive signal.

When configured for the Active High state, a voltage of 8 to 36 V is considered an Active signal. A voltage of 0 to 3.5 V or open is considered an inactive signal.

Table A-125 Configurable Discrete Inputs

PIN	PIN NAME	CONNECTOR	I/O
11	CONFIG DISCRETE IN 1	J1102	IN
31	CONFIG DISCRETE IN 2	J1102	IN
51	CONFIG DISCRETE IN 3	J1102	IN
71	CONFIG DISCRETE IN 4	J1102	IN
11	CONFIG DISCRETE IN 5	J1101	IN

A.16.12 RS-485 Channels

RS-485 channels provide communication between GEA 110 and the display. The cable assembly includes shielded twisted cable for every RS-485 channel. Ground the shield at both ends of the cable.

Table A-126 RS-485 Channels

PIN	PIN NAME	CONNECTOR	I/O
5	RS-485 1 A	J1101	I/O
10	RS-485 1 B	J1101	I/O
4	RS-485 2 A	J1101	I/O
9	RS-485 2 B	J1101	I/O

A.16.13 Transducer Power Out Pins

GEA 110 supplies fixed DC output power for engine/airframe sensors that require supply voltage excitation. The +5 VDC outputs and +12 VDC outputs are internally connected to each other. GEA 110 provides a total of 150 mA for 5 VDC outputs, the 10 VDC output, and the +12 VDC outputs.

Table A-127 Transducer Power Out Pins

PIN	PIN NAME	CONNECTOR	I/O
29	+5 VDC TRANSDUCER POWER OUT	J1102	OUT
76	+5 VDC TRANSDUCER POWER OUT	J1102	OUT
9	+10 VDC TRANSDUCER POWER OUT	J1102	OUT
69	+12 VDC TRANSDUCER POWER OUT	J1102	OUT
17	+12 VDC TRANSDUCER POWER OUT	J1102	OUT

A.16.14 GEA System ID

For installations that have more than one GEA, ground SYS ID #1 to identify GEA #1 and ground SYS ID #2 for GEA #2.

Table A-128 GEA System ID Program Pins

PIN	PIN NAME	CONNECTOR	I/O
12	GEA SYSTEM ID PROGRAM* 1	J1101	IN
13	GEA SYSTEM ID PROGRAM* 2	J1101	IN

A.17 GTR 20 (VHF Communications Radio)

A.17.1 J2001 Connector

Figure A-35 J2001 Connector
Looking at Rear of Unit

Table A-129 GTR 20 J2001 Connector

Pin	Pin Name	I/O
1	AIRCRAFT POWER	IN
2	DISC 1*	IN
3	RESERVED	--
4	TX INTERLOCK OUT	OUT
5	TX INTERLOCK IN*	IN
6	CAN BUS LO	--
7	CAN BUS HI	--
8	ID IN	IN
9	AUX MONO IN 2	IN
10	RECEIVER AUDIO OUT HI	OUT
11	COPILOT HS RIGHT	OUT
12	COPILOT HS LEFT	OUT
13	PILOT HS RIGHT	OUT
14	PILOT HS LEFT	OUT
15	COPILOT PTT*	IN
16	COPILOT MIC IN	IN
17	PILOT MIC IN	IN
18	MUSIC IN RIGHT	IN
19	MUSIC IN LEFT	IN
20	AIRCRAFT GROUND	--
21	SPARE	--
22	DISC 2*	IN
23	RESERVED	--
24	RESERVED	--
25	CAN TERM B	--
26	CAN TERM A	--
27	ID LO	--
28	AUX 2 LO	--
29	RECEIVER AUDIO LO	--
30	COPILOT HS LO	--
31	AUX 1 LO	--
32	AUX MONO IN 1	IN
33	PILOT HS LO	--
34	COPILOT MIC LO	--
35	PILOT PTT*	IN
36	PILOT MIC LO	--
37	MUSIC LO	IN

*Indicates Active Low

A.17.2 Power

Pins 1 and 20 supply power to the GTR 20.

Table A-130 GTR 20 Power Pins

Pin Name	Pin	I/O
AIRCRAFT POWER	1	IN
AIRCRAFT GROUND	20	--

A.17.3 CAN Bus

The CAN Bus conforms to the BOSCH standard for Controller Area Network 2.0-B, and complies with ISO 11898. Pins 25 and 26 are used to terminate the CAN bus. To terminate the CAN bus at the GTR 20, short the pins (25 and 26) together. Refer to section 3.2.2 for details on configuring and terminating the CAN bus.

Table A-131 GTR 20 CAN Bus Pins

Pin Name	Pin	I/O
CAN BUS LO	6	I/O
CAN BUS HI	7	I/O
CAN TERM B	25	--
CAN TERM A	26	--

A.17.4 Unit ID

Refer to section B.8 for ID connections drawings.

Table A-132 GTR 20 Unit ID Pins

Pin Name	Pin	I/O
ID IN	8	IN
ID LO	27	--

A.17.5 MIC Audio

PILOT MIC IN and COPILOT MIC IN are standard carbon or dynamic MIC inputs with integrated preamps providing minimum 20 mVrms into a 150 Ω AC load.

PILOT MIC IN and COPILOT MIC IN are set in the factory so that 150 mVrms modulates the transmitter to 90% nominally at 1000 Hz. The microphone gain adjustment is made through Configuration Mode.

Table A-133 GTR 20 MIC Pins

Pin Name	Pin	I/O
PILOT MIC IN	17	IN
PILOT MIC LO	36	--
COPILOT MIC IN	16	IN
COPILOT MIC LO	34	--

A.17.6 Aux Mono Audio

Auxiliary audio mono audio inputs have a nominal input impedance of 600 Ω, max. rated input level is 5 Vrms.

Table A-134 GTR 20 AUX Mono Audio

Pin Name	Pin	I/O
AUX MONO IN 1	32	IN
AUX 1 LO	31	--
AUX MONO IN 2	9	IN
AUX 2 LO	28	--

A.17.7 Headset Audio

Headset audio outputs.

Table A-135 GTR 20 Headset Audio Pins

Pin Name	Pin	I/O
PILOT HS RIGHT	13	OUT
PILOT HS LEFT	14	OUT
PILOT HS LO	33	--
COPILOT HS RIGHT	11	OUT
COPILOT HS LEFT	12	OUT
COPILOT HS LO	30	--

A.17.8 Music Inputs

The music inputs are noise rejecting and have a nominal input impedance of 600 Ω. The max. rated input level is 1.5 Vrms. The MUSIC LO must be connected to the music source along with MUSIC RIGHT and MUSIC LEFT. If MUSIC LO is not connected, music volume will be low (or inaudible), noisy, and distorted.

Table A-136 GTR 20 Music Input Pins

Pin Name	Pin	I/O
MUSIC IN RIGHT	18	IN
MUSIC IN LEFT	19	IN
MUSIC LO	37	--

A.17.9 Receiver Audio

RECEIVER AUDIO OUT is a 40 mW audio output that is intended to drive a recording device or an audio panel.

RECEIVER AUDIO OUT supplies 40 mW (4.9 Vrms) into a 600Ω load, and is generally connected to the audio panel (if used). This output can also drive a recording device. When driving a recording device the output level will typically need to be reduced. The output level is controlled through configuration mode.

RECEIVER AUDIO OUT is the summation of the receiver audio, COM sidetone audio, intercom audio, and AUX audio.

Table A-137 GTR 20 Receiver Audio Pins

Pin Name	Pin	I/O
RECEIVER AUDIO OUT HI	10	OUT
RECEIVER AUDIO LO	29	--

A.17.10 Pilot/Copilot PTT Inputs

When pulled low, these inputs allow the audio that is present on the PILOT/COPILOT MIC IN to be transmitted over the radio.

Active-Low discrete inputs are considered active if either the voltage to ground is ≤3.5 VDC or the resistance to ground is ≤375 Ω.

These inputs are considered inactive if the voltage to ground is 6.5-33 VDC or the resistance to ground is >100 kΩ.

Table A-138 GTR 20 PTT Pins

Pin Name	Pin	I/O
PILOT PTT*	35	IN
COPILOT PTT*	15	IN
*Indicates Active Low		

A.17.11 TX Interlock

TX Interlock Out is an active low output that indicates that this radio's (GTR 20) COM is transmitting. Connect to another COM's TX Interlock input. TX INTERLOCK OUT will sink 20mA of current and will output a voltage of 1V or less.

TX Interlock In is an active low input that desensitizes (protects) the COM receiver when another COM is transmitting.

TX Interlock In is considered active if either the voltage to ground is ≤3.5 VDC or the resistance to ground is ≤375 Ω.

TX Interlock In is considered inactive if the voltage to ground is 6.5-33 VDC or the resistance to ground is >100 kΩ.

NOTE

The Transmit Interlock status will report as active in the System Information screen when this input is pulled low.

Table A-139 GTR 20 TX Interlock Pins

Pin Name	Pin	I/O
TX INTERLOCK OUT	4	OUT
TX INTERLOCK IN*	5	IN
*Indicates Active Low		

A.17.12 Discrete Inputs

These discrete inputs are active low and are configurable.

Active-Low discrete inputs are considered active if either the voltage to ground is ≤3.5 VDC or the resistance to ground is ≤375 W.

These inputs are considered inactive if the voltage to ground is 6.5-33 VDC or the resistance to ground is >100 kW.

Table A-140 GTR 20 Discrete Input Pins

Pin Name	Pin	I/O
DISC 1*	2	In
DISC 2*	22	In

*Indicates Active Low

A.18 GCO 14

The GCO 14 mating designator, part number, and associated connector kit is listed in table A-141.

Table A-141 GCO 14 Connector

Ref. Des.	Description	Connector P/N	Kit P/N
P1000	GCO 14 Cable Assembly	320-01701-00	011-06537-10

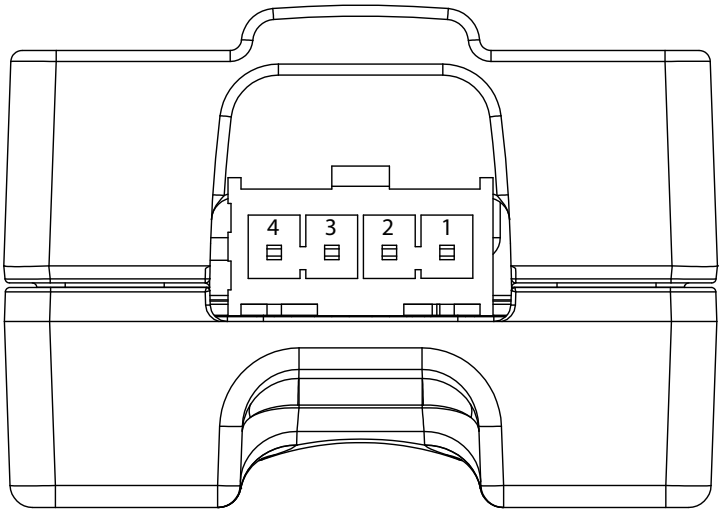

Figure A-36 GCO 14 P1000 Connector

Table A-142 GCO 14 P1000 Connector

Pin	Pin Name	Color	I/O
1	GROUND	BLACK	--
2	CLOCK	WHITE	I/O
3	DATA	YELLOW	I/O
4	+3.3v	RED	IN

A.19 GDL 52R

The GDL 52R mating designator, part number, and associated connector kit is listed in table A-144.

Table A-143 GDL 52R Connector

Ref. Des.	Description	Connector P/N	Kit P/N
J521	Conn, Rcpt, D-Sub, Crimp Socket, 15 ckt	330-00625-15	011-04170-00

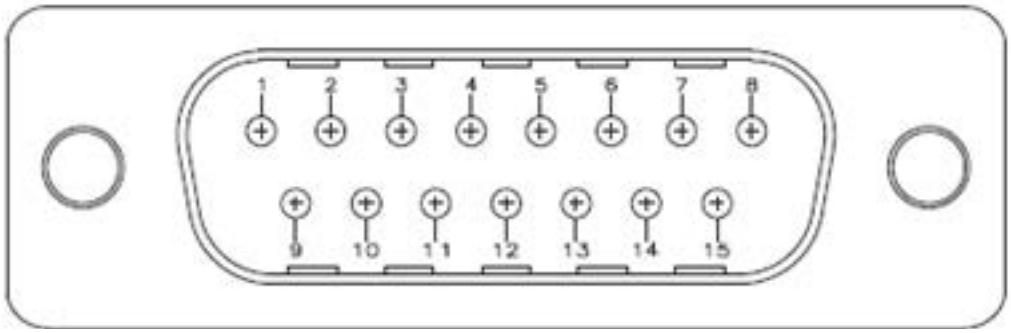

Figure A-37 GDL 52R J521 Connector

Table A-144 GDL 52R J521 Connector

Pin	Pin Name	I/O
1	RESERVED	--
2	RESERVED	--
3	RESERVED	--
4	RESERVED	--
5	RS-232 TX 2	OUT
6	RS-232 RX 2	IN
7	RS-232 TX 1	OUT
8	RS-232 RX 1	IN
9	POWER GROUND	--
10	AIRCRAFT POWER	IN
11	RS-232 GROUND 1	--
12	RS-232 GROUND 2	--
13	MUSIC OUT LEFT	OUT
14	AUDIO COMMON	--
15	MUSIC OUT RIGHT	OUT

A.20 GTR 205R(x)

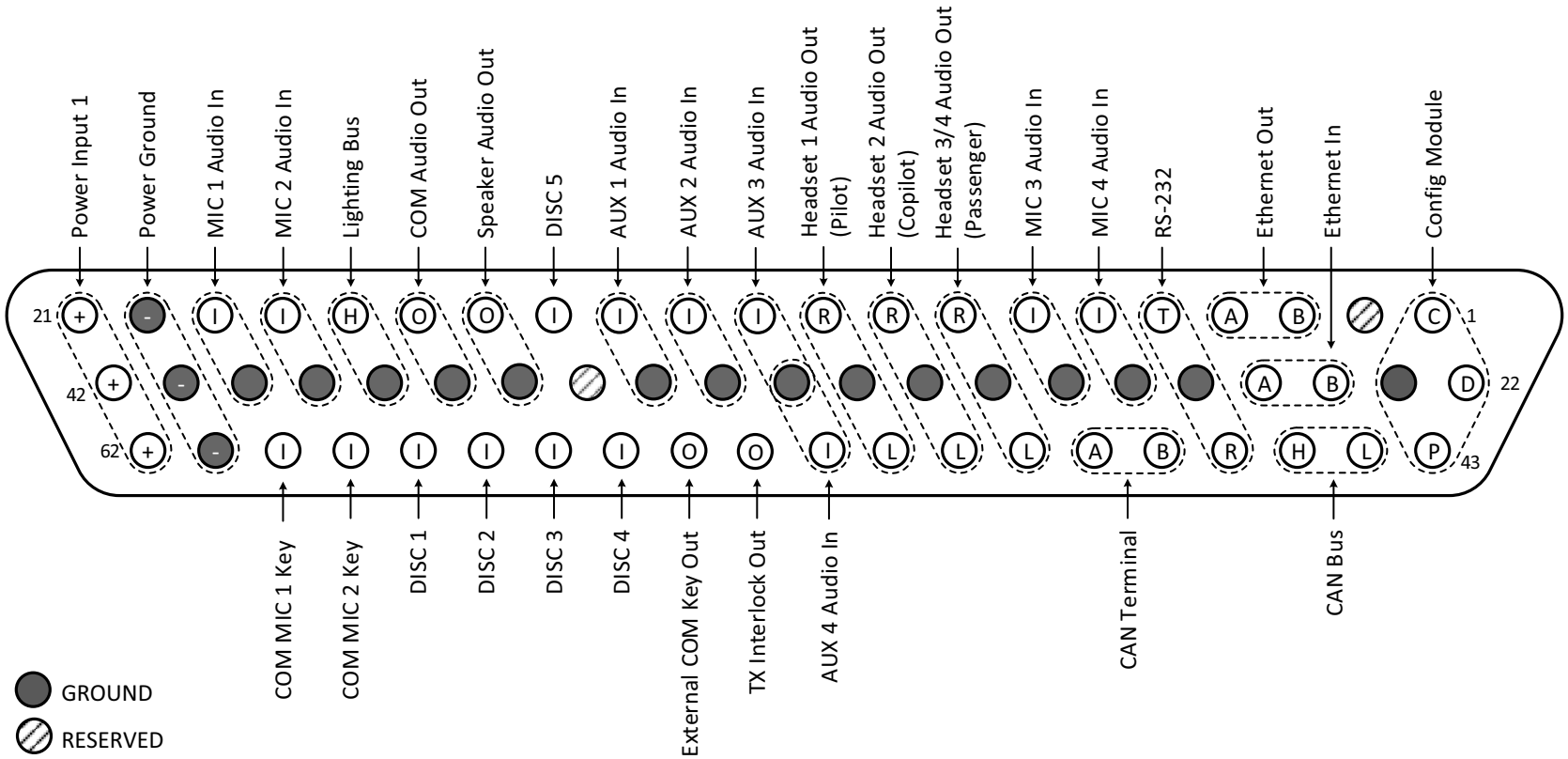

Figure A-38 GTR 205R(x) Connector
View Looking at Rear of Unit

Table A-145 GTR 205R(x) Pins

Pin	Pin Name	I/O
1	CONFIG MODULE CLOCK	OUT
2	RESERVED	--
3	ETHERNET OUT 1B	OUT
4	ETHERNET OUT 1A	OUT
5	RS-232 OUT	OUT
6	MIC 4 AUDIO IN HI	IN
7	MIC 3 AUDIO IN HI	IN
8	HEADSET 3/4 AUDIO OUT RIGHT	OUT
9	HEADSET 2 AUDIO OUT RIGHT	OUT
10	HEADSET 1 AUDIO OUT RIGHT	OUT
11	AUX 3 AUDIO IN HI	IN
12	AUX 2 AUDIO IN HI	IN
13	AUX 1 AUDIO IN HI	--
14	DISC 5*	IN
15	SPEAKER AUDIO OUT HI	--
16	COM AUDIO OUT HI	OUT
17	LIGHTING BUS HI	IN
18	MIC 2 AUDIO IN HI	IN
19	MIC 1 AUDIO IN HI	IN
20	AIRCRAFT GROUND	--
21	AIRCRAFT POWER	IN
22	CONFIG MODULE DATA	I/O
23	CONFIG MODULE GROUND	--
24	ETHERNET IN 1B	IN
25	ETHERNET IN 1A	IN
26	RS-232 GROUND	--
27	MIC 4 AUDIO IN LO	IN
28	MIC 3 AUDIO IN LO	IN
29	HEADSET 3/4 AUDIO OUT LO	OUT
30	HEADSET 2 AUDIO OUT LO	OUT
31	HEADSET 1 AUDIO OUT LO	OUT
32	AUX 3/4 AUDIO IN LO	IN
33	AUX 2 AUDIO IN LO	IN
34	AUX 1 AUDIO IN LO	IN
35	RESERVED	--
36	SPEAKER AUDIO OUT LO	OUT
37	COM AUDIO OUT LO	OUT
38	LIGHTING BUS LO	IN

Pin	Pin Name	I/O
39	MIC 2 AUDIO IN LO	IN
40	MIC 1 AUDIO IN LO	IN
41	AIRCRAFT GND	--
42	AIRCRAFT POWER	IN
43	CONFIG MODULE POWER	OUT
44	CAN BUS LO	I/O
45	CAN BUS HI	I/O
46	RS-232 IN	IN
47	CAN BUS TERM B	--
48	CAN BUS TERM A	--
49	HEADSET 3/4 AUDIO OUT LEFT	OUT
50	HEADSET 2 AUDIO OUT LEFT	OUT
51	HEADSET 1 AUDIO OUT LEFT	OUT
52	AUX 4 AUDIO IN HI	IN
53	TX INTERLOCK OUT	OUT
54	EXTERNAL COM KEY OUT	OUT
55	DISC 4*	IN
56	DISC 3*	IN
57	DISC 2*	IN
58	DISC 1*	IN
59	COM MIC 2 KEY*	IN
60	COM MIC 1 KEY *	IN
61	AIRCRAFT GROUND	--
62	AIRCRAFT POWER	IN

An asterisk (*) following a signal name denotes that the signal is an Active-Low, requiring a ground to activate. If there is no asterisk, the signal is an Active-High.

A.20.1 Functional Descriptions

Information about power input requirements, lighting bus input, and antenna connections for the GTR is provided in this section. Refer to appendix B for interconnect information.

A.20.1.1 Power and Ground Pins

Power inputs P1-21, P1-42, and P1-62 provide power for the COM radio. All three pins must be connected.

Table A-146 Power and Ground Pins

Pin Name	Pin	I/O
AIRCRAFT POWER	21	IN
AIRCRAFT POWER	42	IN
AIRCRAFT POWER	62	IN
AIRCRAFT GROUND	20	--
AIRCRAFT GROUND	41	--
AIRCRAFT GROUND	61	--

A.20.1.2 Lighting Bus

CAUTION

Connection of the lighting bus to incorrect pins can cause damage to the unit that will require return to the factory for repair. Ensure that the lighting bus is connected to the correct pins and does not short to any adjacent pins prior to applying power to the unit, including the lighting bus.

Table A-147 Lighting Pins

Pin Name	Pin	I/O
LIGHTING BUS HI	17	IN
LIGHTING BUS LO	38	IN

A.20.1.3 Antennas

Antennas use BNC coaxial connectors on the connector backplate.

Table A-148 Antenna Pins

Pin Name	Pin
COM ANTENNA	I/O

A.20.1.4 Serial Data – RS-232

Table A-149 RS-232 Pins

Pin Name	Pin	I/O
RS-232 OUT	5	OUT
RS-232 IN	46	IN
RS-232 GND	26	--

A.20.1.5 COM Audio

A.20.1.5.1 COM Audio Function

Activation of COM MIC 1 TRANSMIT enables MIC 1 AUDIO IN HI and causes the transceiver to transmit.

Activation of COM MIC 2 TRANSMIT enables MIC 2 AUDIO IN HI and causes the transceiver to transmit.

500 Ω COM AUDIO is a 65 mW audio output that is intended to drive a headset or an audio panel.

A.20.1.6 COM Audio Electrical Characteristics

A.20.1.6.1 FAIL-SAFE AUDIO

When the unit loses power, internal relays connect:

- AUX 1 to pilot headset left
- MIC 1 to COM audio out
- MIC 1 Key input to COM Tx key

A.20.1.6.2 COM MIC AUDIO

MIC 1, MIC 2, MIC 3, and MIC 4 are standard carbon or dynamic mic inputs with integrated preamps providing minimum 70 mVrms into a 600 Ω load.

MIC 1, MIC 2, MIC 3, and MIC 4 are set in the factory so that 500 mVrms modulates the transmitter to 90% nominally at 1000 Hz. The microphone gain adjustment is made through configuration mode.

Table A-150 MIC Pins

Pin Name	Pin	I/O
MIC 1 AUDIO IN HI	19	IN
MIC 2 AUDIO IN HI	18	IN
MIC 3 AUDIO IN HI	7	IN
MIC 4 AUDIO IN HI	6	IN
MIC 1 AUDIO IN LO	40	IN
MIC 2 AUDIO IN LO	39	IN
MIC 3 AUDIO IN LO	28	IN
MIC 4 AUDIO IN LO	27	IN

A.20.1.6.3 COM AUDIO

COM AUDIO supplies 65 mW into a 500 Ω load. This is a balanced output and the LO output must be connected.

COM AUDIO is the summation of the COM receiver audio, COM sidetone audio, and intercom audio.

Table A-151 COM Audio Pins

Pin Name	Pin	I/O
COM AUDIO OUT HI	16	OUT
COM AUDIO OUT LO	37	OUT

A.20.1.7 COM Discrete Inputs

Active-Low discrete inputs are considered active if either the voltage to ground is ≤ 3.5 VDC or the resistance to ground is ≤ 375 Ω. These inputs are considered inactive if the voltage to ground is 6.5-33 VDC or the resistance to ground is > 100 kΩ.

Active-High discrete inputs are considered active if the voltage to ground is > 6.5 VDC. These inputs are considered inactive if the voltage to ground is ≤ 3.5 VDC or the resistance to ground is ≤ 375 Ω.

A.20.1.7.1 COM MIC 1 KEY*

COM MIC 1 KEY* discrete input, when pulled low, allows the audio that is present on the MIC 1 AUDIO IN HI (P1-19) to be transmitted over the radio.

A.20.1.7.2 COM MIC 2 KEY*

COM MIC 2 KEY* discrete input, when pulled low, allows the audio that is present on the MIC 2 AUDIO IN HI (P1-18) to be transmitted over the radio.

Table A-152 COM Discrete Inputs

Pin Name	Pin	I/O
COM MIC 1 KEY*	60	IN
COM MIC 2 KEY*	59	IN

An asterisk (*) following a signal name denotes that the signal is an Active-Low, requiring a ground to activate. If there is no asterisk, the signal is an Active-High.

A.20.1.8 Configurable Discrete Inputs

Configurable discrete inputs are considered active if either the voltage to ground is ≤ 3.5 VDC or the resistance to ground is ≤ 375 Ω. This input is considered inactive if the voltage to ground is 11-33 VDC or the resistance to ground is > 100 kΩ. The default setting is Off for all discrete inputs. All configurable discrete inputs are optional.

A.20.1.8.1 TX INTERLOCK*

The TRANSMIT INTERLOCK* discrete input desensitizes the receiver of the COM radio. In dual COM installations, the discrete input prevents interference from the second radio.

Table A-153 Configurable Discrete Input Pins

Pin Name	Pin	I/O
DISC 1*	58	IN
DISC 2*	57	IN
DISC 3*	56	IN
DISC 4*	55	IN

An asterisk (*) following a signal name denotes that the signal is an Active-Low, requiring a ground to activate.

A.20.1.9 Configuration Module

Table A-154 Configuration Module

Pin Name	Pin	I/O
CONFIG MODULE CLOCK	1	OUT
CONFIG MODULE DATA	22	I/O
CONFIG MODULE GROUND	23	--
CONFIG MODULE POWER	43	OUT

A.20.1.10 AUX Pins

AUX 1 and AUX 2 are limited to 5 V_{RMS}. AUX 3 and AUX 4 are limited to 1.5 V_{RMS}.

Table A-155 AUX Pins

Pin Name	Pin	I/O	Max V_{RMS}
AUX 1 AUDIO IN HI	13	In	5
AUX 2 AUDIO IN HI	12	In	5
AUX 3 AUDIO IN HI	11	In	1.5
AUX 4 AUDIO IN HI	52	In	1.5
AUX 1 AUDIO IN LO	34	--	--
AUX 2 AUDIO IN LO	33	--	--
AUX 3/4 AUDIO IN LO	32	--	--

A.20.1.11 CAN Bus Pins

The GTR should only be terminated if it is located at the end of the CAN bus. To terminate the CAN bus at the GTR, short pins 47 and 48 together, this creates a 120 ohm termination internal to the GTR LRU. If installed, the jumper between pins 47 and 48 should be 3" or less, and contained completely within the connector backshell.

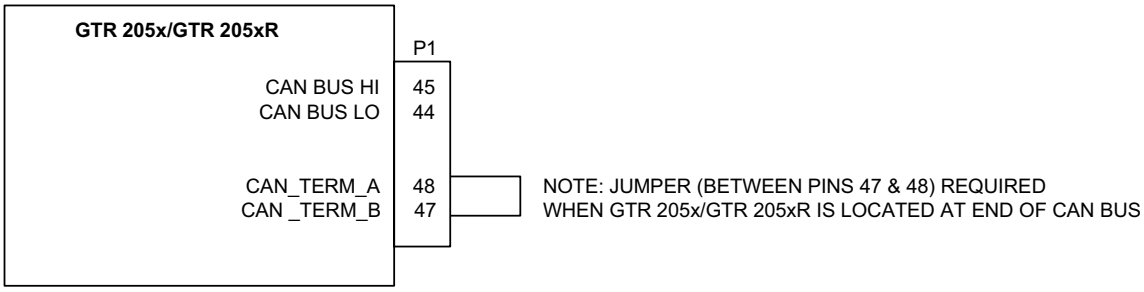

Figure A-39 CAN Bus Pins

Table A-156 CAN Bus Pins

Pin Name	Pin	I/O
CAN BUS LO	44	I/O
CAN BUS HI	45	I/O
CAN TERM B	47	--
CAN TERM A	48	--

A.20.1.12 Ethernet (HSDB)

Ethernet based HSDB meets the hardware aspects of IEEE standard 802.3 for 10 base T Ethernet communications.

Table A-157 GTR/GNC Ethernet (HSDB) Pins

Pin Name	Pin	I/O
ETHERNET IN 1A	25	IN
ETHERNET IN 1B	24	IN
ETHERNET OUT 1A	4	OUT
ETHERNET OUT 1B	3	OUT

A.20.1.13 Headset Outputs

Table A-158 Headset Output Pins

Pin Name	Pin	I/O
HEADSET 3/4 AUDIO OUT RIGHT	8	OUT
HEADSET 2 AUDIO OUT RIGHT	9	OUT
HEADSET 1 AUDIO OUT RIGHT	10	OUT
HEADSET 3/4 AUDIO OUT LO	29	OUT
HEADSET 2 AUDIO OUT LO	30	OUT
HEADSET 1 AUDIO OUT LO	31	OUT
HEADSET 3/4 AUDIO OUT LEFT	49	OUT
HEADSET 2 AUDIO OUT LEFT	50	OUT
HEADSET 1 AUDIO OUT LEFT	51	OUT

A.20.1.14 Discrete Outputs

The TX INTERLOCK OUT* will be pulled low when the GTR 205(x)/205R(x) is transmitting. EXTERNAL COM KEY OUT* activates when the MIC key is triggered.

Table A-159 Discrete Output Pins

Pin Name	Pin	I/O
TX INTERLOCK OUT*	53	OUT
EXTERNAL COM KEY OUT*	54	OUT

APPENDIX B INTERCONNECT DIAGRAMS

B.1 AXIS FLIGHT DISPLAY INTERCONNECTS
Figure B-1.1 AXIS Flight Display Power, Config Module, and HSDB Interconnect B-4
Figure B-1.2 RS-232 Interconnect B-6
Figure B-1.3 CAN Bus Interconnect B-7
Figure B-1.4 GMU 11/GSU 25D/GTP 59 Interconnect B-8
Figure B-1.5 GMU 22/44/44(B)/GSU 25/GTP 59 Interconnect B-9
Figure B-1.6 GSU 75/GMU 44(B) Interconnect B-10
Figure B-1.7 GSU 75 – AXIS Interconnect B-11
Figure B-1.8 GEA 24(B) Power Interconnect B-12
B.2 NAVIGATION AND COMMUNICATION INTERCONNECTS
Figure B-2.1 GNX 375 Navigator Interconnect B-13
Figure B-2.2 GPS 175/GNC 355 Navigator Interconnect B-14
Figure B-2.3 Single GTN Xi Navigator Interconnect B-15
Figure B-2.4 Single GTN Series Navigator Interconnect B-16
Figure B-2.5 GNC 215/GNC 255 Interconnect B-17
Figure B-2.6 GTR 205(R)(x) Interconnect B-18
Figure B-2.7 GTR 200(B)/20/225 Interconnect B-19
Figure B-2.8 SL30/SL40 Interconnect B-20
Figure B-2.9 Single GNS 430W/530W Interconnect B-21
Figure B-2.10 GNS 480 Interconnect B-22
Figure B-2.11 TO/GA Switch Interconnect B-23
B.3 TRANSPONDER INTERCONNECTS
Figure B-3.1 GTX 45R Transponder Connection Method Interconnect B-24
Figure B-3.2 GTX 345/345R/345D/345DR Transponder Interconnect B-25
Figure B-3.3 GTX 23ES/32/327/328/33(ES)/330(ES)/325/335/335D/335R/335DR/35R B-26
Figure B-3.4 GTS 8XX and 8X5 Traffic Receiver Interconnect B-27
B.4 WEATHER AND TRAFFIC INTERCONNECTS
Figure B-4.1 GDL 50/52(R) Interconnect B-28
B.5 AUTOPILOT INTERCONNECTS
Figure B-5.1 GMC 507/GSA 28 Interconnect B-29
Figure B-5.2 GSA 28 Roll and Pitch Trim Interconnect B-30
Figure B-5.3 Trim Switch Interconnect B-31
B.6 GAD 27 INTERCONNECTS
Figure B-6.1 GAD 27 Trim Control Interconnect B-32
Figure B-6.2 GAD 27 External and Cockpit Lighting, Power and Flaps Interconnect B-33
Figure B-6.3 GAD 27 Discrete Input Interconnect B-34
Figure B-6.4 GAD 27 Lighting Bus Control Interconnect B-35
Figure B-6.5 GAD 27 Keep Alive Power Interconnect B-36
Figure B-6.6 GAD 27 Absolute Position Flaps Control (3-position Switch) Interconnect B-37
Figure B-6.7 GAD 27 Absolute Position Flaps Control (Push-Button Switch) Interconnect B-38
Figure B-6.8 GAD 27 Absolute Position Flaps Control (Rotary Switch) Interconnect B-38
B.7 MISCELLANEOUS INTERCONNECTS
Figure B-7.1 Standby Flight Display (GI 275) Interconnect B-39
Figure B-7.2 GHA 15 Radio AGL Interconnect B-40
Figure B-7.3 Serial Devices (ELT and Vertical Power VP-X) Interconnect B-41
Figure B-7.4 Reserved B-42
Figure B-7.5 Carbon Monoxide Interconnect B-43
Figure B-7.6 GI 260 Interconnect B-44

B.8 AUDIO INTERCONNECTS

Figure B-8.1 AXIS Flight Display (C or N/C) Internal Audio Panel Interconnect B-45
Figure B-8.2 AXIS Flight Display Alert and COM Audio Interface B-48
Figure B-8.3 GMA 245RM Interconnect B-49
Figure B-8.4 GTR 20/200B VHF COM Interconnect B-55
Figure B-8.5 GTR 20/200B VHF COM with Intercom Interconnect B-56
Figure B-8.6 GMA 342/345 Interconnect B-58

B.9 SENSOR WIRING EXAMPLES

Figure B-9.1 GEA 24(B) Temperature Sensors B-59
Figure B-9.2 GEA 24(B) Pressure Sensors B-60
Figure B-9.3 GEA 24(B) RPM Sensors B-61
Figure B-9.4 GEA 24(B) Current, Voltage, and Flow Sensors B-63
Figure B-9.5 GEA 24(B) Fuel Quantity Wiring B-64
Figure B-9.6 GEA 24(B) General Purpose Sensors B-66
Figure B-9.7 GEA 110 Temperature and Flow Sensors B-68
Figure B-9.8 GEA 110 Temperature Sensors B-69
Figure B-9.9 GEA 110 Pressure Sensors B-70
Figure B-9.10 GEA 110 RPM Sensors B-71
Figure B-9.11 GEA 110 Current and Voltage Sensors B-72
Figure B-9.12 GEA 110 Fuel Quantity Wiring B-73
Figure B-9.13 GEA 110 General Purpose Sensors B-74
Figure B-9.14 GDU 116C/NC Discretes B-76
Figure B-9.15 GEA 24(B) Discretes B-78
Figure B-9.16 GEA 110 Discretes B-80
Figure B-9.17 P-Lead Resistor Installation - Braid Shield B-81
Figure B-9.18 P-Lead Resistor Installation - Stranded Wire Shield B-82
Figure B-9.19 Fuse Holder Assembly B-83

B.10 LYCOMING/CONTINENTAL SENSOR WIRING EXAMPLES

Figure B-10.1 GEA 24(B) Lycoming/Continental Interface (4- and 6-Cylinder) B-84
Figure B-10.2 GEA 24(B) Lycoming/Continental Interface (4- and 6-Cylinder) B-85
Figure B-10.3 GEA 110 Lycoming/Continental Interface (4- and 6-Cylinder) B-86
Figure B-10.4 GEA 110 Lycoming/Continental Interface (4- and 6-Cylinder) B-87

B.11 PT6A SENSOR WIRING EXAMPLES

Figure B-11.1 GEA 24(B) PT6A Interconnect B-88
Figure B-11.2 GEA110 PT6A Interconnect B-89

B.12 ROTAX SENSOR WIRING EXAMPLES

Figure B-12.1 GEA 24(B) Rotax Interconnect B-90
Figure B-12.2 GEA 24(B) Rotax Interconnect B-91
Figure B-12.3 GEA 110 Rotax Interconnect B-92
Figure B-12.4 GEA 24 FADEC Interconnect B-93

1. UNLESS OTHERWISE SPECIFIED, ALL STRANDED WIRE MUST CONFORM TO MIL-W-22759/16 OR EQUIVALENT.
2. UNLESS OTHERWISE SPECIFIED, ALL SHIELDED WIRE MUST CONFORM TO MIL-C-27500 OR EQUIVALENT.
2. UNLESS OTHERWISE SPECIFIED, ALL WIRES ARE 24 GAUGE MINIMUM.
4. THE FOLLOWING SYMBOLS ARE USED ON THIS DRAWING:

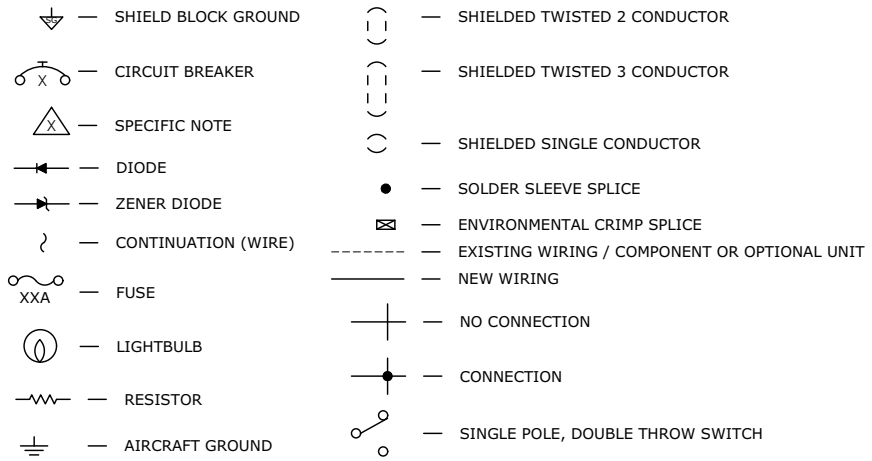

~ REPRESENTS INTERCHANGEABLE PIN OR PORT WITH SIMILAR FUNCTIONING PIN OR PORT.
SEE XX FOR PIN DESCRIPTION. PINS OR PORTS WITHOUT ~ MUST BE CONNECTED AS SHOWN.
EXAMPLES INCLUDE:
~ DISCRETE IN 7* → INDICATES ANY AVAILABLE 'DISCRETE IN' CAN BE USED.
~ + 5 VDC → INDICATES ANY AVAILABLE +5 VDC OUTPUT CAN BE USED.
~ GEN PURP → INDICATES ANY AVAILABLE GENERAL PURPOSE PORT CAN BE USED.

5. UNLESS OTHERWISE SPECIFIED, ALL SHIELD GROUNDS MUST BE MADE TO THE RESPECTIVE UNIT BACKSHELLS. ALL OTHER GROUNDS SHOULD BE TERMINATED TO AIRCRAFT GROUND AS CLOSE TO THE RESPECTIVE UNIT AS POSSIBLE.
6. UP TO 4 FUEL QUANTITY GAUGES CAN BE CONFIGURED.
7. REFER TO SAE AS4461 FOR BEST SOLDERING PRACTICES AND MATERIALS.
8. FOR SPLICES NEAR CONNECTORS, MAXIMUM LENGTH FROM SPLICE TO CONNECTOR IS THREE INCHES.

Figure B-1 General Interconnect Notes

B.1 AXIS Flight Display Interconnects

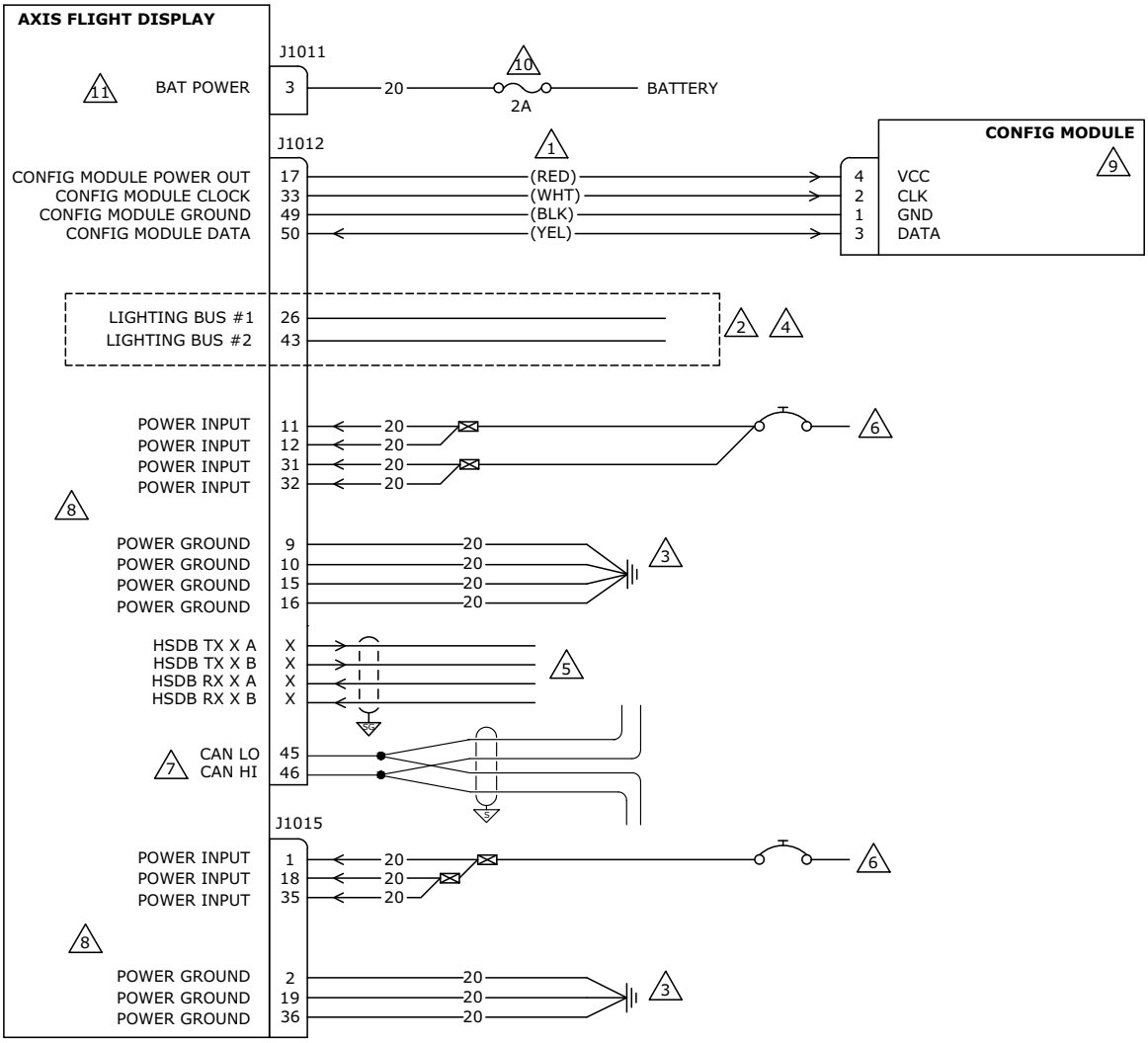

NOTES

1. WIRES ARE PRE-INSTALLED ON CONFIGURATION MODULE FROM THE FACTORY.

2. OPTIONAL LIGHTING BUS CONNECTION (28 VDC, 14 VDC, OR 5 VDC). UPGRADES FROM G3X STC SA01899WI REQUIRE ONLY ONE LIGHTING CONNECTION; PIN 26 FOR 28 VDC AIRCRAFT OR PIN 43 FOR 14 VDC AIRCRAFT.

3. WIRE GAUGE SHOWN FOR POWER AND GROUND LENGTH LESS THAN 20 FEET. FOR POWER AND GROUNDS GREATER THAN 20 FEET REFER TO AC 43.13-1B, CHAPTER 11 TO DETERMINE THE APPROPRIATE WIRE GAUGE.

4. AS BEST AS POSSIBLE MATCH EXISTING LIGHTING WIRING GAUGE SIZE WHEN CONNECTING TO LIGHTING CONTROL MECHANISM (I.E. RHEOSTAT, POTENTIOMETER).

Figure B-1.1 AXIS Flight Display Power, Config Module, and HSDB Interconnect Sheet 1 of 2

NOTES CONT'D

5 REFERENCE SECTION 3.2.1 FOR HSDB ARCHITECTURE.

6 THE J1012 BREAKER PROVIDES POWER FOR PFD/MFD/GPS FUNCTIONS, AND THE J1015 BREAKER PROVIDES POWER FOR NAV/COM/AUDIO FUNCTIONS. REFER TO SECTION 3.4.2 FOR BREAKER SIZING.

7 EACH GDU IN THE SYSTEM MUST BE CONNECTED TO THE CAN BUS, IN ADDITION TO THE HSDB NETWORK. IF A GDU IS AT THE TERMINAL END OF THE CAN BUS, REFERENCE SECTION 3.2.2.4 FOR INFORMATION ON CAN BUS TERMINATION.

8 ONLY APPLICABLE TO GDU 116 C/NC UNITS.

9 A CONFIG MODULE IS REQUIRED FOR EACH INSTALLED AXIS FLIGHT DISPLAY.

10 REFER TO FIGURE B-9.19 FOR ASSEMBLY OF 330-01791-10 FUSE HOLDER. LOCATE FUSE HOLDER AS CLOSE AS POSSIBLE TO CONNECTION AT POSITIVE BATTERY TERMINAL, HOT SIDE OF MASTER SOLENOID, OR ALWAYS-HOT BATTERY BUS.

11 BATTERY POWER INTERFACE PROVISIONS FOR FUTURE UPDATES TO SUPPORT REMOTE CONNECTIVITY AND DATABASE UPDATES. CURRENT DRAW IS LESS THAN 18 µA.

Figure B-1.1 AXIS Flight Display Power, Config Module, and HSDB Interconnect Sheet 2 of 2

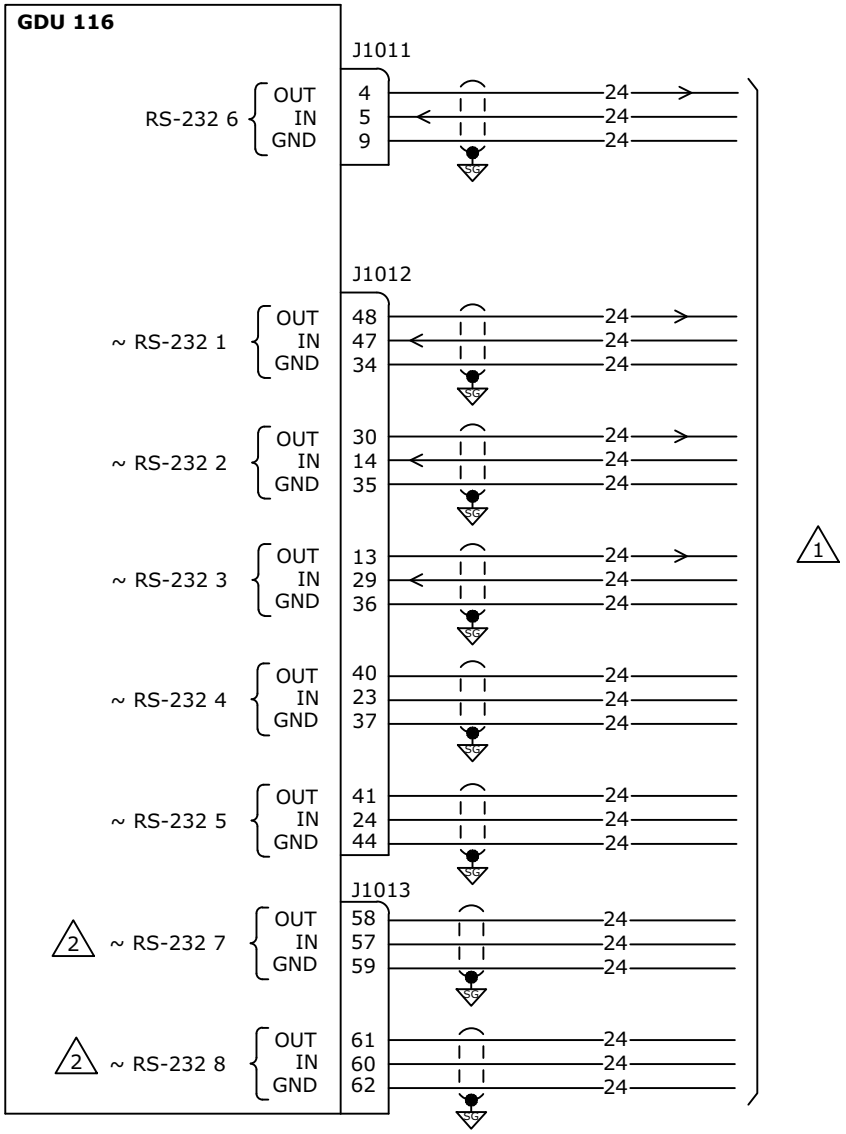

NOTES

1. THE ABOVE FIGURE REPRESENTS THE EIGHT POSSIBLE CONNECTIONS OF THE GDU 116( ) GENERAL USE RS-232 PORTS. THESE CAN BE USED INTERCHANGEABLY TO ANY REQUIRED INTERFACES THAT THE AXIS SYSTEM SUPPORTS.

2. RS-232 PORTS 7 AND 8 ARE AVAILABLE ONLY ON COM AND NAV/COM UNITS.

Figure B-1.2 RS-232 Interconnect

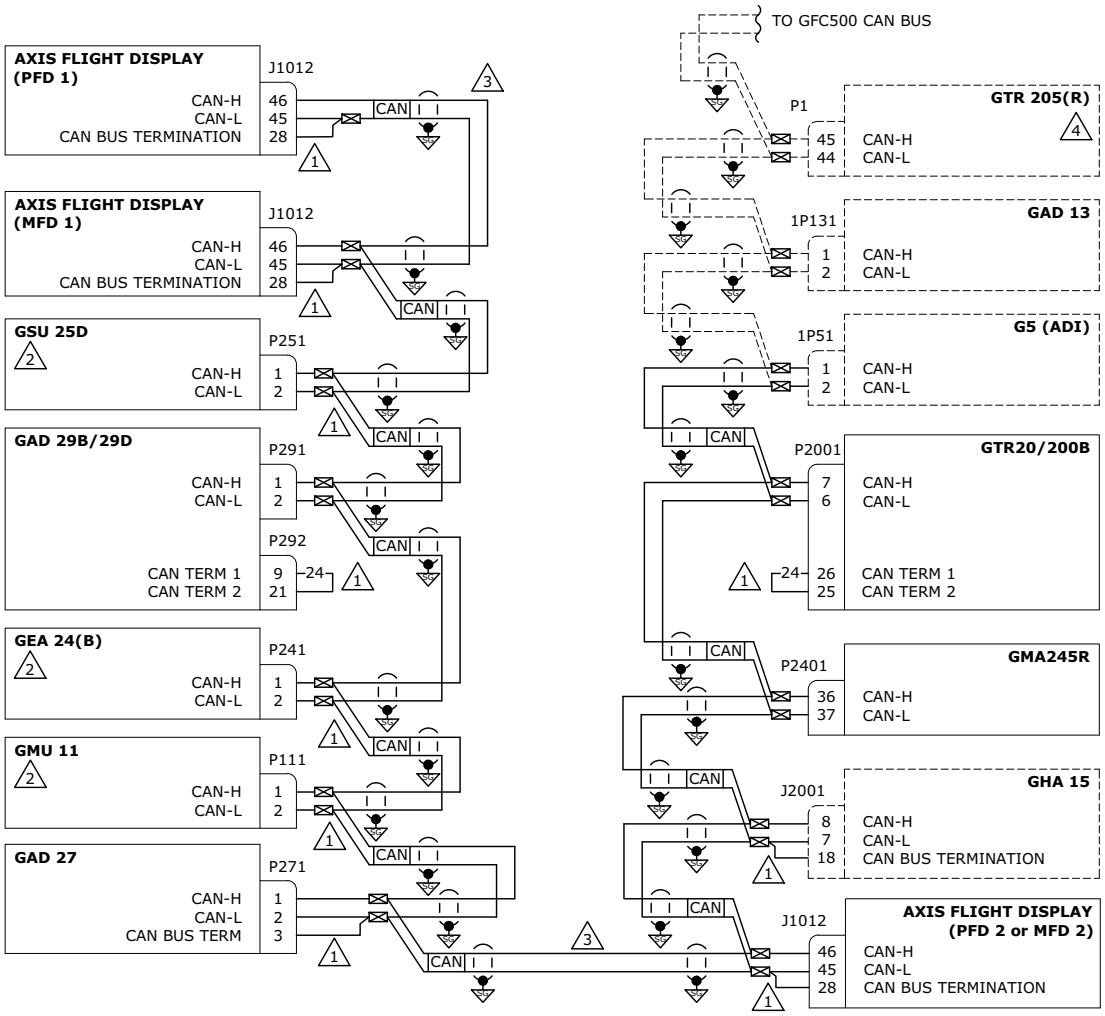

NOTES

1. REFER TO SECTION 3.2.2.4 FOR FURTHER CAN BUS INFORMATION.

2. IF LRU IS INSTALLED AT THE END OF THE CAN BUS, A GARMIN CAN BUS TERMINATOR P/N 011-02887-00 MUST BE INSTALLED ON THIS CONNECTOR.

3. CAN BUS LRUs MAY BE IN ANY ORDER ALONG BACKBONE AS LONG AS CAN BUS BACKBONE STRUCTURE GUIDELINES ARE FOLLOWED. REFER TO CAN BUS STRUCTURE GUIDELINES IN SECTION 3 FOR FURTHER INFORMATION.

4. USE ONLY CAN OR RS-232 OR HSDB TO CONNECT THE GTR 205(R). HSDB IS THE PREFERRED CONNECTION. REFER TO SECTION B.2 FOR RS-232 AND HSDB CONNECTIONS.

Figure B-1.3 CAN Bus Interconnect

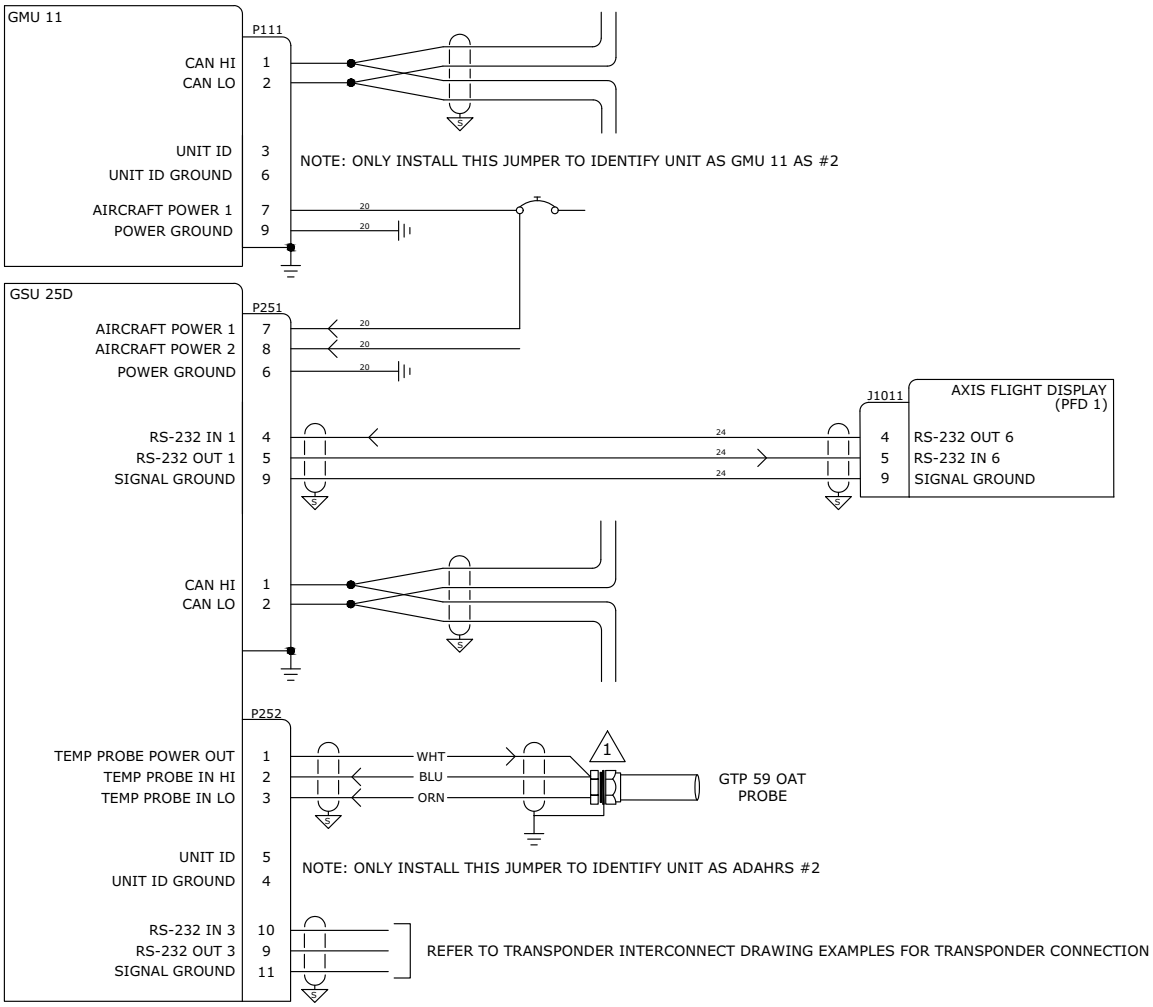

NOTES

1 THE WIRING SUPPLIED WITH THE GTP 59 MAY BE EXTENDED IF THE SUPPLIED WIRE LENGTH IS NOT SUFFICIENT FOR A PARTICULAR INSTALLATION.

2 WHEN CONNECTING TO A LIGHTING CONTROL MECHANISM (E.G., RHEOSTAT, POTENTIOMETER), USE THE SAME WIRE GAUGE AS THE EXISTING LIGHTING CIRCUIT.

Figure B-1.4 GMU 11/GSU 25D/GTP 59 Interconnect

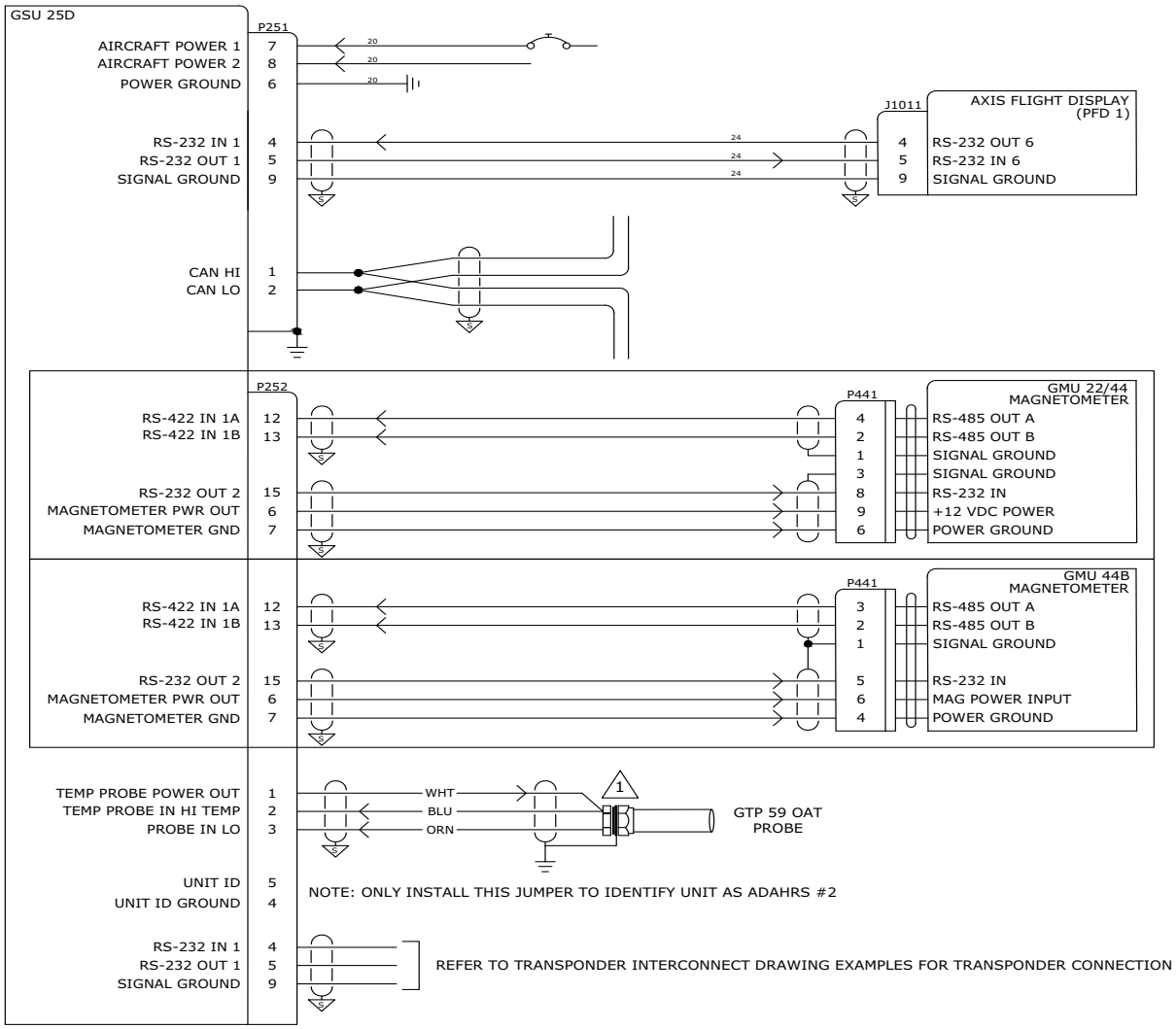

NOTES

1 THE WIRING SUPPLIED WITH THE GTP 59 MAY BE EXTENDED IF THE SUPPLIED WIRE LENGTH IS NOT SUFFICIENT FOR A PARTICULAR INSTALLATION.

Figure B-1.5 GMU 22/44/44(B)/GSU 25/GTP 59 Interconnect

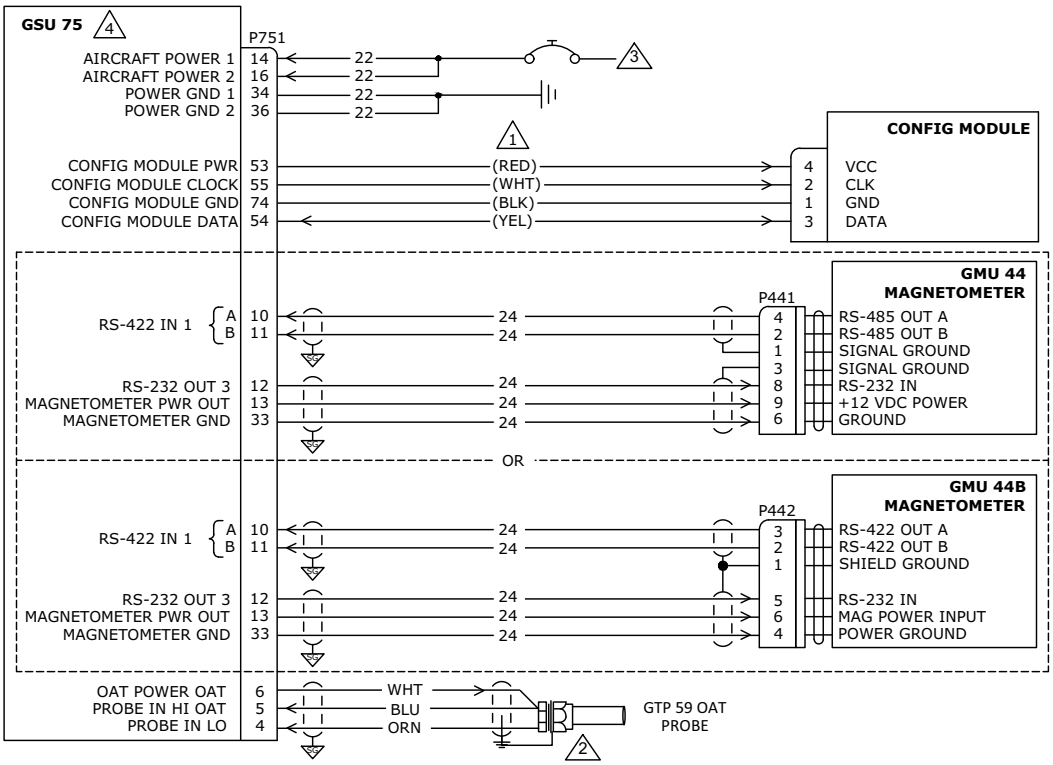

NOTES

1. CONFIGURATION MODULE IS MOUNTED IN THE BACKSHELL OF THE CONNECTOR USING 28 AWG WIRES. CONTACTS SUPPLIED WITH THE CONFIGURATION MODULE MUST BE USED FOR CONNECTING CONFIGURATION MODULE HARNESS TO P751.

2. THE WIRING SUPPLIED WITH THE GTP 59 MAY BE EXTENDED IF THE SUPPLIED WIRE LENGTH IS NOT SUFFICIENT FOR A PARTICULAR INSTALLATION.

3. SEE APPENDIX 3.4.2 FOR BREAKER SIZING, BUSING, AND LABELING.

4. GSU 75 CAN ONLY INTERFACE TO GDU 116 C/NC UNITS.

Figure B-1.6 GSU 75/GMU 44(B) Interconnect

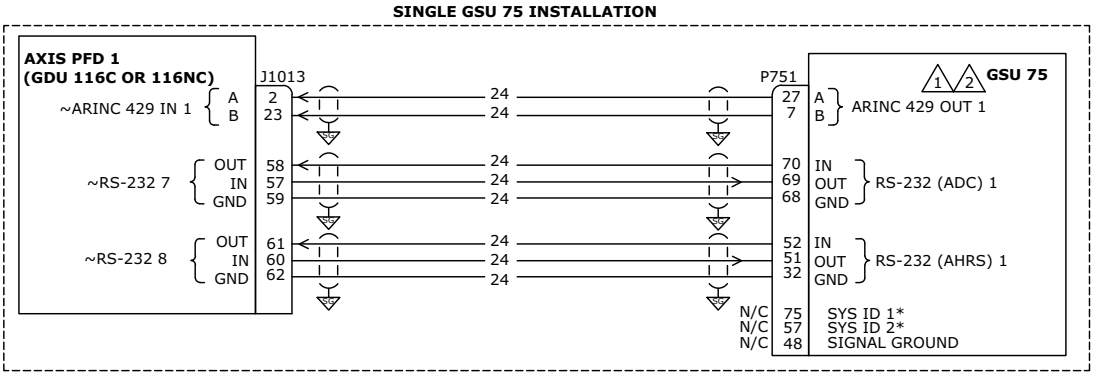

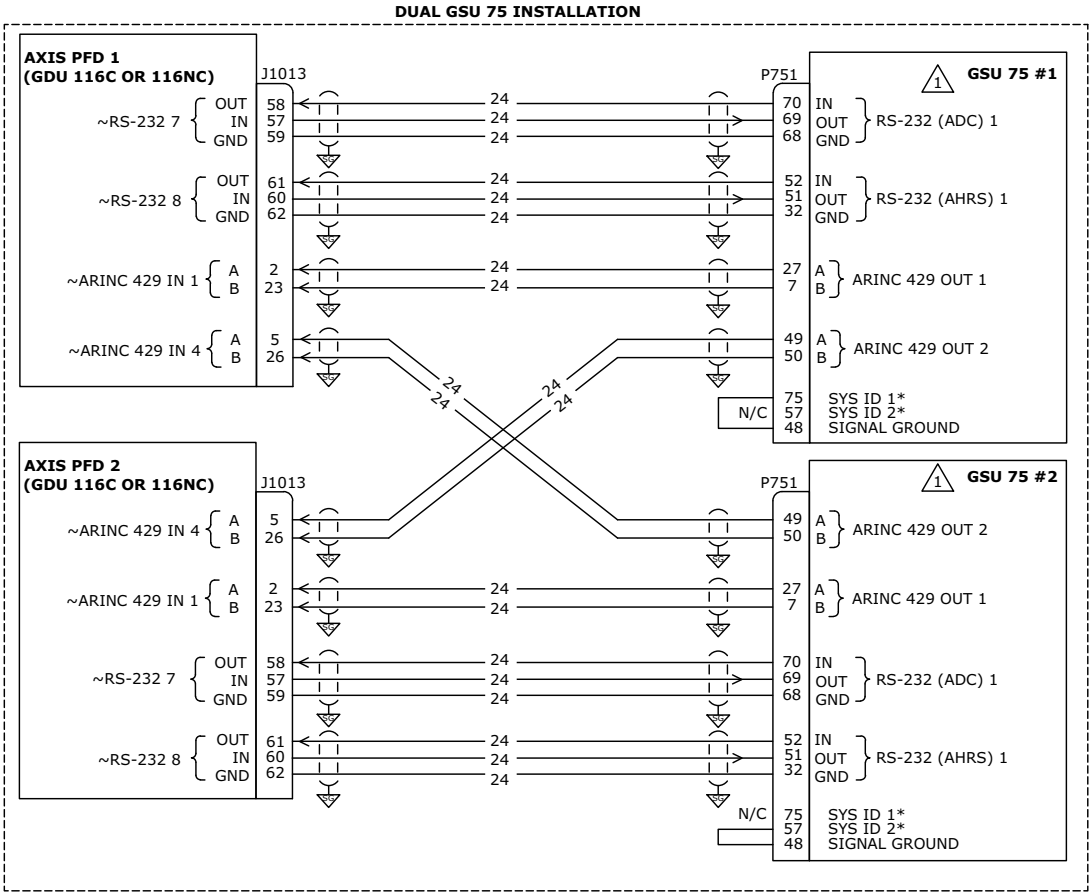

NOTES

1. GSU 75 CAN ONLY INTERFACE TO GDU 116 C/NC UNITS.

2. IF A GDU 116C OR 116NC IS INSTALLED AS AN MFD, THE GSU 75 SHOULD ALSO BE CONNECTED TO THE MFD VIA ARINC 429 AS DEPICTED BY THE CROSS-SIDE INTERFACE IN THE DUAL GSU 75 INSTALLATION DRAWING.

Figure B-1.7 GSU 75 – AXIS Interconnect

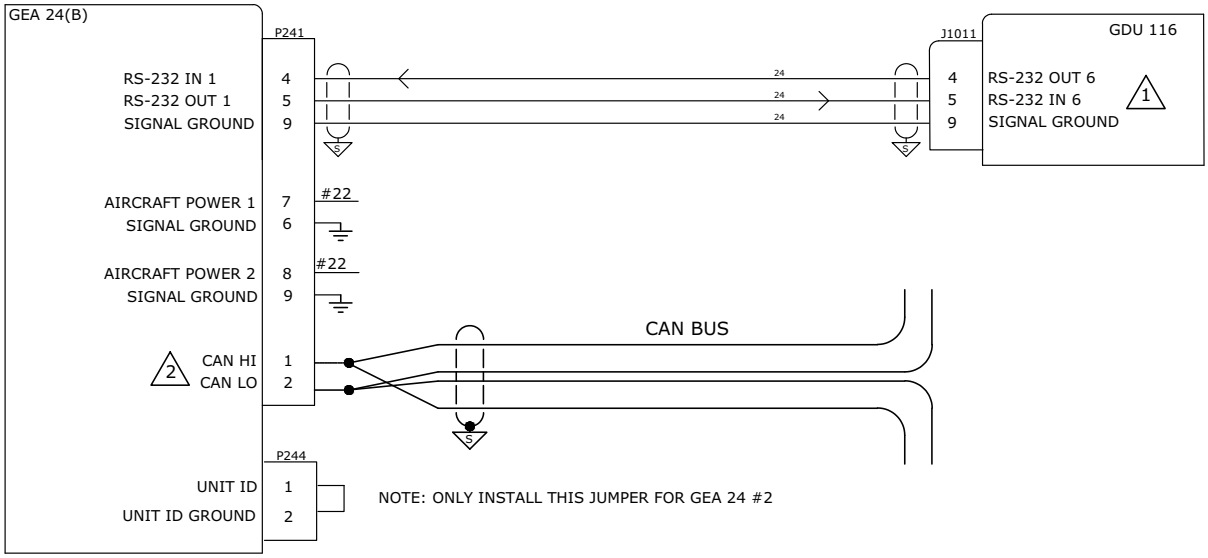

NOTES

1. OPTIONAL BACKUP PATH FOR EIS DATA. IT IS RECOMMENDED THIS BE CONNECTED TO PRESERVE CRITICAL ENGINE DATA IN THE CASE OF A PRIMARY DATABUS FAILURE. USE ANY AVAILABLE RS-232 PORT IN THE AXIS SYSTEM.

2. USE 9-PIN CAN TERMINATION ADAPTER IF GEA 24 IS AT THE END OF THE CAN BUS.

Figure B-1.8 GEA 24(B) Power Interconnect

B.2 Navigation and Communication Interconnects

NOTE: THIS INTERFACE EXAMPLE DRAWING IS NOT SUFFICIENT FOR INSTALLATION OF A GNX 375 UNIT. PLEASE REFERENCE THE APPROPRIATE INSTALLATION DOCUMENTATION FOR THE GNX 375 FOR COMPREHENSIVE INSTALLATION AND CONFIGURATION INFORMATION.

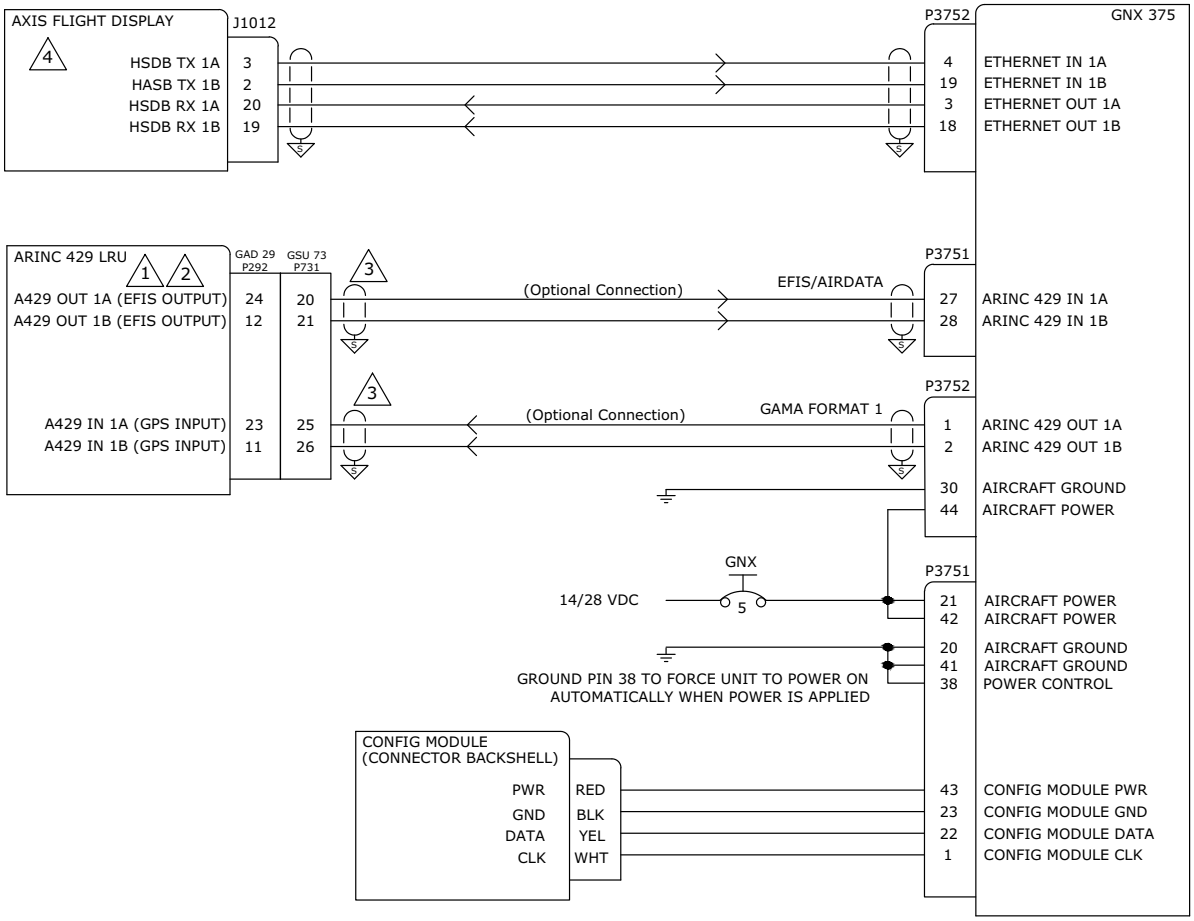

NOTES

1. OPTIONAL ARINC 429 BACKUP PATH TO PROVIDE GPS DATA TO A CONNECTED G5 IN THE SYSTEM. A G5 IN THE SYSTEM CAN ONLY RECEIVE ARINC 429 DATA FROM A GNX 375 NAVIGATOR, VIA GAD 29 OR GSU 73.

2. ARINC 429 PIN ASSIGNMENTS SHOWN FOR EXAMPLE. CONNTECT TO ANY AVAILABLE ARINC 429 PORT ON GAD 29 OR GSU 73. GDU 116 CONNECTOR J1013 CANNOT BE USED FOR THESE CONNECTIONS.

3. ARINC 429 SDI SELECTED IN GNX 375 ARINC 429 PORT CONFIGURATION PAGE MUST MATCH SDI DISPLAYED IN AXIS GNX 375 MODIFY PAGE.

4. USE ANY AVAILABLE HSDB PORT, IN COMPLIANCE WITH REQUIREMENTS LISTED IN SECTION 3.2.1 FOR HSDB ARCHITECTURE GUIDANCE.

REFER TO TABLE C-4 FOR INTERFACING CONFIGURATION INFORMATION.

Figure B-2.1 GNX 375 Navigator Interconnect

NOTE: THIS INTERFACE EXAMPLE DRAWING IS NOT SUFFICIENT FOR INSTALLATION OF A GPS 175 OR GNC 355 UNIT. PLEASE REFERENCE THE APPROPRIATE INSTALLATION DOCUMENTATION FOR THE GPS 175/GNC 355 FOR COMPREHENSIVE INSTALLATION AND CONFIGURATION INFORMATION.

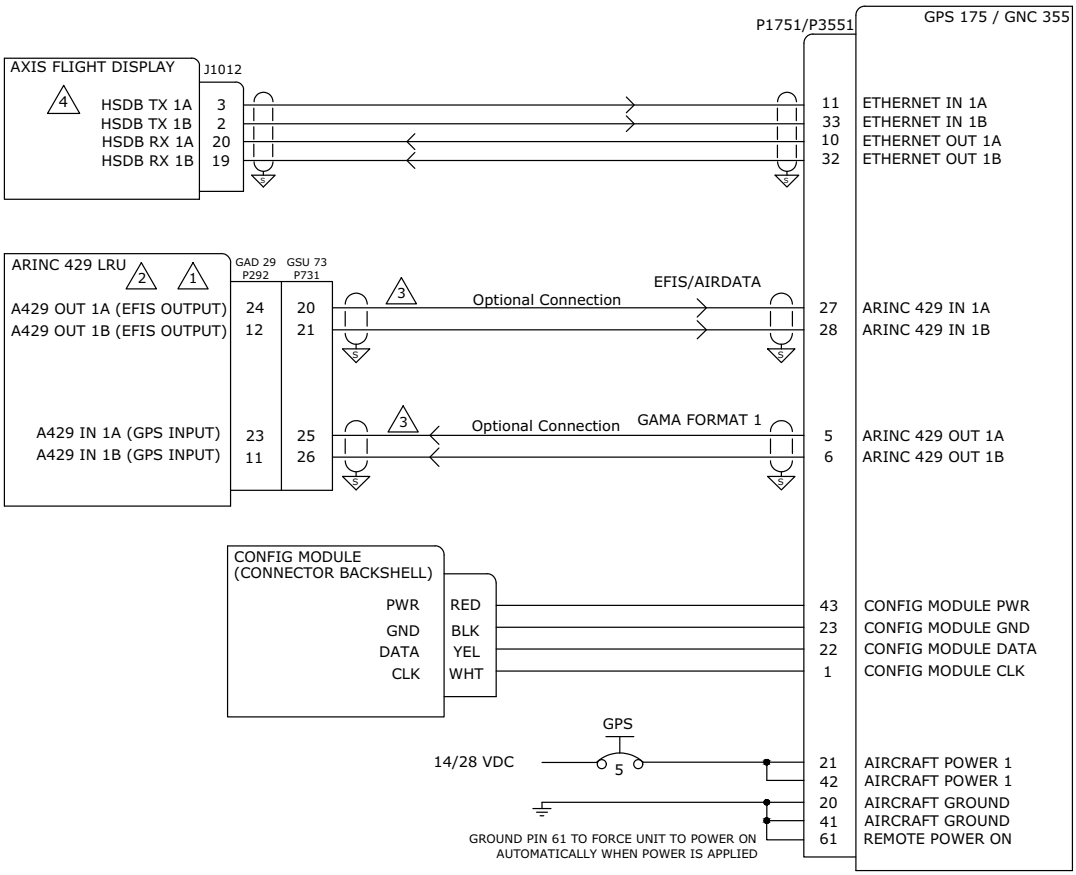

NOTES

1. OPTIONAL ARINC 429 BACKUP PATH TO PROVIDE GPS DATA TO A CONNECTED G5 IN THE SYSTEM. A G5 IN THE SYSTEM CAN ONLY RECEIVE ARINC 429 DATA FROM A GPS 175/GNC 355 NAVIGATOR, VIA GAD 29 OR GSU 73.

2. ARINC 429 PIN ASSIGNMENTS SHOWN FOR EXAMPLE. CONNTECT TO ANY AVAILABLE ARINC 429 PORT ON GAD 29 OR GSU 73. GDU 116 CONNECTOR J1013 CANNOT BE USED FOR THESE CONNECTIONS.

3. ARINC 429 SDI SELECTED IN GPS 175 OR GNC 355 ARINC 429 PORT CONFIGURATION PAGE MUST MATCH SDI DISPLAYED IN AXIS GPS 175 OR GNC 355 MODIFY PAGE.

4. USE ANY AVAILABLE HSDB PORT, IN COMPLIANCE WITH REQUIREMENTS LISTED IN SECTION 3.2.1 FOR HSDB ARCHITECTURE GUIDANCE.

REFER TO TABLE C-2 (GPS 175) AND TABLE C-3 (GNC 355) FOR INTERFACING CONFIGURATION INFORMATION.

Figure B-2.2 GPS 175/GNC 355 Navigator Interconnect

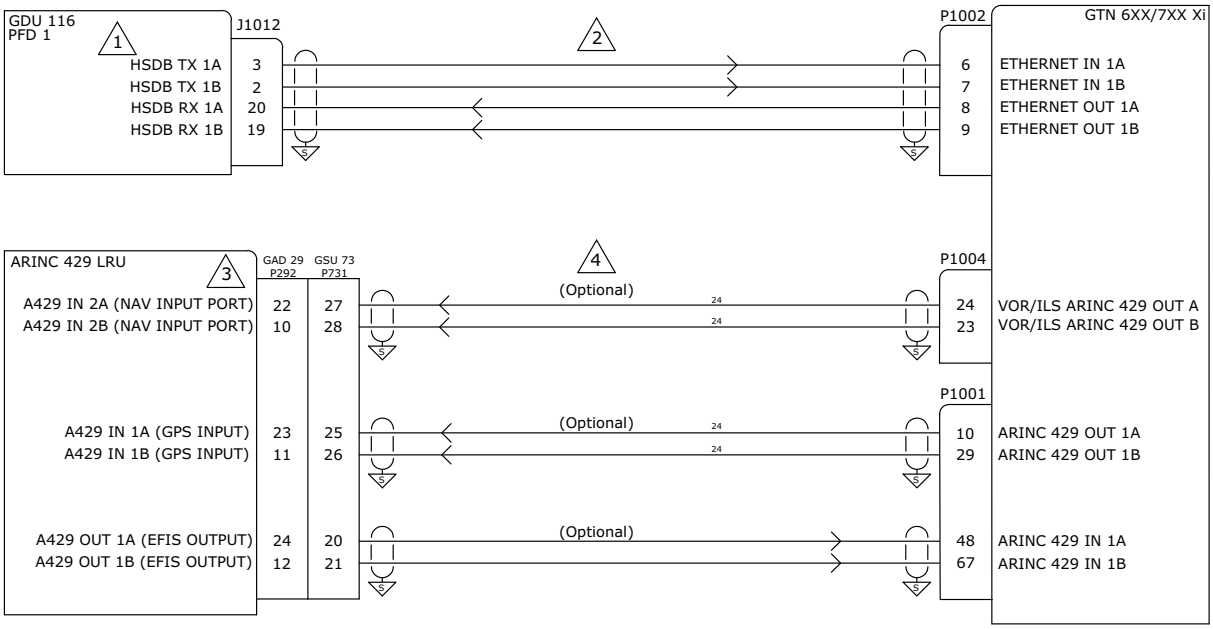

NOTES

1. USE ANY AVAILABLE HSDB PORT. REFERENCE SECTION 3.2.1.

2. GTN SYSTEM ID MUST MATCH ON BOTH AXIS MODIFICATION PAGE AND GTN XI MAIN SETUP CONFIGURATION MENU. THE SELECTED VALUE RESULTS IN THE INTERFACED GTN XI BEING ASSIGNED GPS1/NAV/COM1 OR GPS2/NAV/COM2 IN THE AXIS SYSTEM, AS APPLICABLE. THE RESULTING COM POSITION, IF APPLICABLE, MUST BE CONNECTED TO THE CORRECT COM AUDIO INPUT ON AN INTERFACING AUDIO PANEL.

3. OPTIONAL ARINC 429 BACKUP PATH TO PROVIDE GPS AND NAV DATA TO A CONNECTED G5 IN THE SYSTEM. A G5 IN THE SYSTEM CAN ONLY RECEIVE ARINC 429 DATA FROM A GTN XI NAVIGATOR, VIA GAD 29 OR GSU 73. ARINC 429 PIN ASSIGNMENTS SHOWN FOR EXAMPLE. CONNTECT TO ANY AVAILABLE ARINC 429 PORT ON GAD 29 OR GSU 73. GDU 116 CONNECTOR J1013 CANNOT BE USED FOR THESE CONNECTIONS.

4. NOT APPLICABLE TO GTN 625Xi, GTN 725Xi OR GTN 635Xi.

REFER TO TABLE C-5 FOR INTERFACING CONFIGURATION INFORMATION.

Figure B-2.3 Single GTN Xi Navigator Interconnect

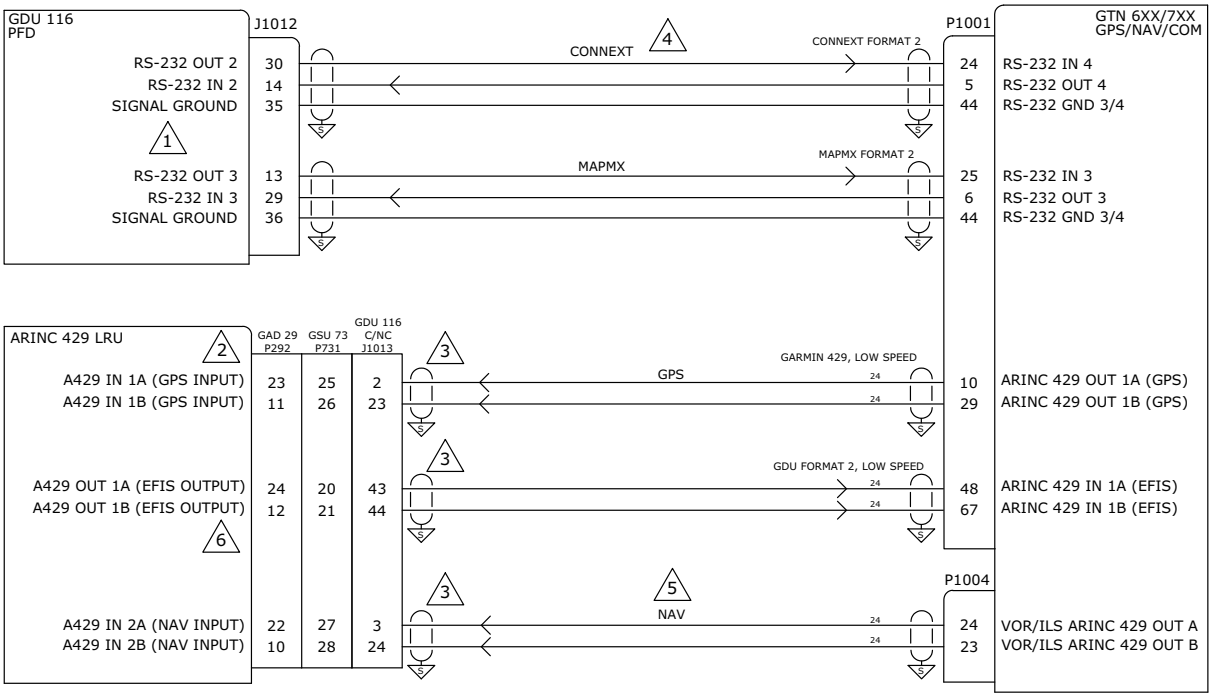

NOTES

1. RS-232 PIN ASSIGNMENTS SHOWN FOR EXAMPLE. CONNECT TO ANY AVAILABLE GDU 116 SERIAL PORT.

2. ARINC 429 PIN ASSIGNMENTS SHOWN FOR EXAMPLE, CONNECT TO ANY AVAILABLE ARINC 429 PORT. THE AXIS GDU WILL USE GTN SERIES NAVIGATOR ARINC 429 DATA USING ANY AVAILABLE ARINC 429 PORT IN THE SYSTEM (GAD 29, GSU 73, GDU 116 CONNECTOR J1013). A G5 IN THE SYSTEM CAN ONLY RECEIVE ARINC 429 DATA FROM A GTN SERIES NAVIGATOR, VIA GAD 29 OR GSU 73. USE GAD29 IF AVAILABLE.

3. ARINC 429 SDI SELECTED IN GTN ARINC 429 PORT CONFIGURATION PAGE MUST MATCH SDI DISPLAYED IN AXIS GTN 6XX/7XX MODIFY PAGE.

4. OPTIONAL CONNECTION. IF TWO EXTERNAL NAVIGATORS ARE INSTALLED, ONLY CONNECT TO UNIT #1.

5. GTN 650/750 ONLY.

6. THE EFIS OUTPUT ARINC 429 PORT CAN BE PARALLELED TO TWO EXTERNAL NAVIGATORS, IF BOTH REQUIRE THIS DATA FROM THE AXIS SYSTEM.

REFER TO TABLE C-6 FOR INTERFACING CONFIGURATION INFORMATION.

Figure B-2.4 Single GTN Series Navigator Interconnect

GNC 215 HSDB Connection Option (Recommended)

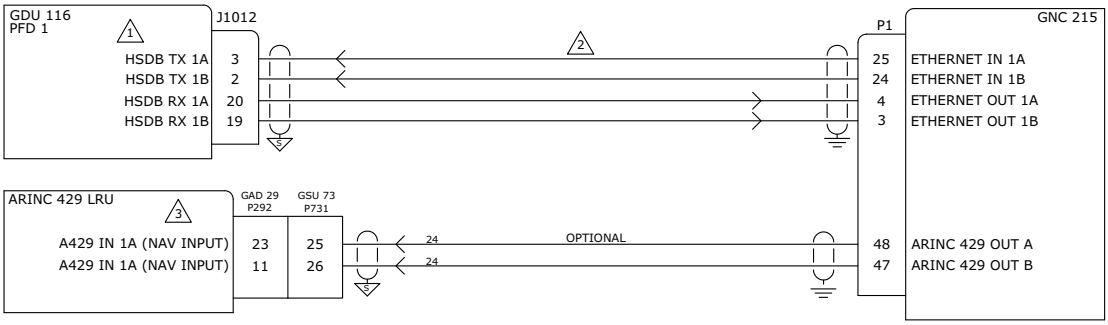

GNC 215/GNC 255 Serial Connection Option

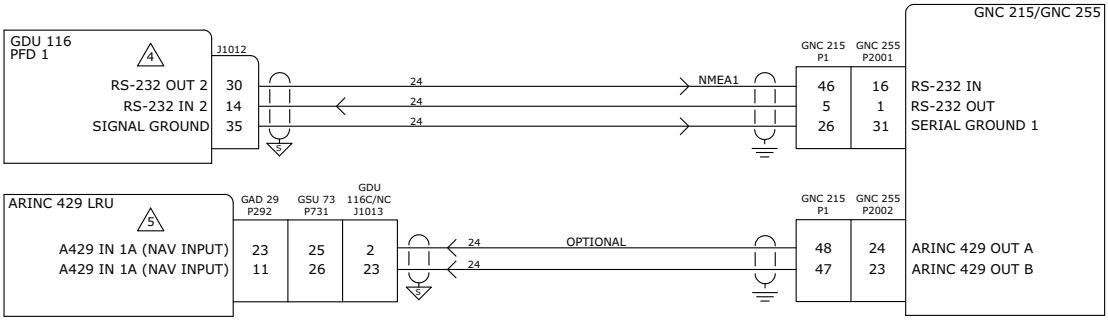

NOTES

1. USE ANY AVAILABLE HSDB PORT, IN COMPLIANCE WITH REQUIREMENTS LISTED IN SECTION 3.2.1.

2. GNC SYSTEM ID MUST MATCH ON BOTH AXIS MODIFICATION PAGE AND GNC UNIT SETUP CONFIGURATION MENU. THE SELECTED VALUE RESULTS IN THE INTERFACED GNC BEING ASSIGNED NAV/COM1 OR NAV/ COM2 IN THE AXIS SYSTEM.

3. OPTIONAL BACKUP PATH TO PROVIDE NAV DATA TO A CONNECTED G5 IN THE SYSTEM. A G5 IN THE SYSTEM CAN ONLY RECEIVE ARINC 429 DATA FROM A GNC 215 NAVIGATOR CONNECTED USING HSDB, VIA GAD 29 OR GSU 73. USE ANY AVAILABLE PORT PRESENT ON A GAD 29 OR GSU 73.

4. RS-232 PIN ASSIGNMENTS SHOWN FOR EXAMPLE. CONNECT TO ANY AVAILABLE GDU 116 SERIAL PORT.

5. OPTIONAL BACKUP PATH. THE GDU WILL CONSUME GNC 215 OR GNC 255 ARINC 429 DATA USING ANY AVAILABLE ARINC 429 PORT IN THE SYSTEM (GAD 29, GSU 73, GDU 116 CONNECTOR J1013). A G5 IN THE SYSTEM CAN ONLY RECEIVE ARINC 429 DATA FROM A GNC255/215, VIA GAD 29 OR GSU 73. ARINC 429 PIN ASSIGNMENTS SHOWN FOR EXAMPLE, CONNTECT TO ANY AVAILABLE ARINC 429 PORT.

REFER TO TABLE C-18 (GNC 215 HSDB) OR TABLE 5 (GNC 215 SERIAL) AND TABLE C-17 (GNC 255) FOR INTERFACING CONFIGURATION INFORMATION.

Figure B-2.5 GNC 215/GNC 255 Interconnect

GTR 205(R)(x) HSDB CONNECTION OPTION (RECOMMENDED)

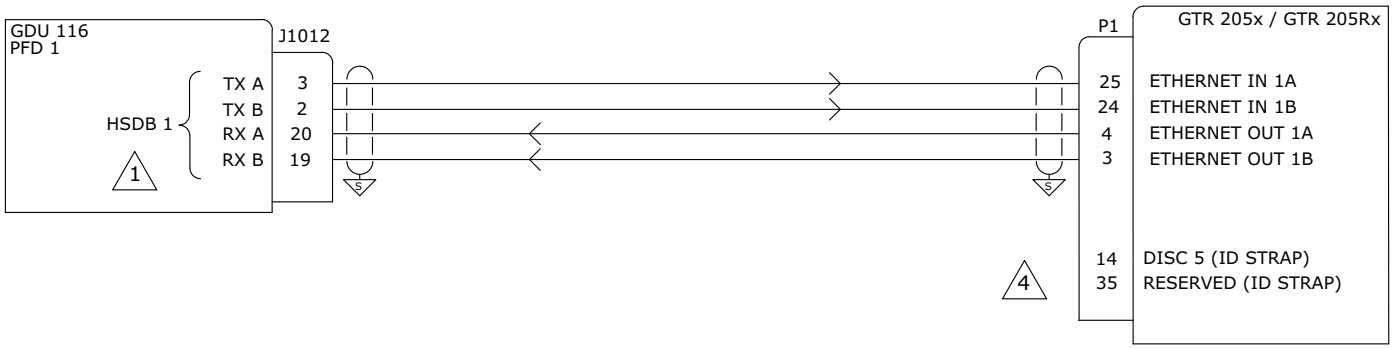

GTR 205(R)(x) CAN CONNECTION OPTION

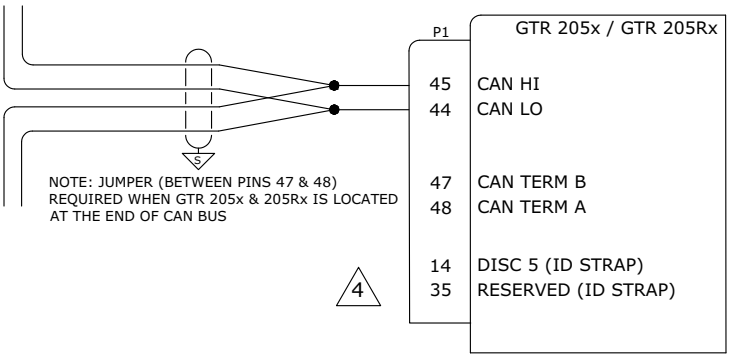

GTR 205x SERIAL CONNECTION OPTION

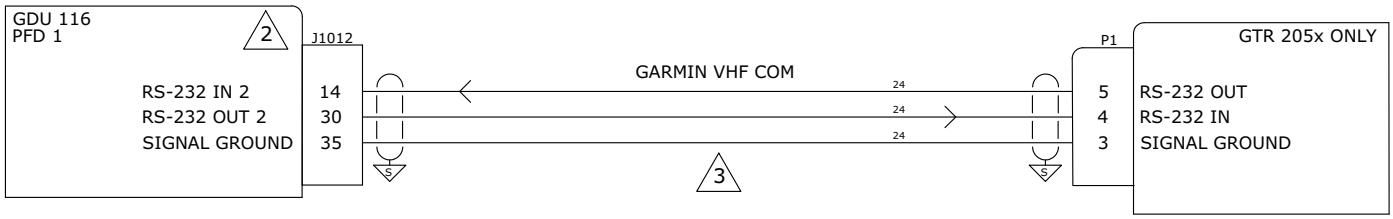

NOTES

1. USE ANY AVAILABLE HSDB PORT, IN COMPLIANCE WITH REQUIREMENTS LISTED IN SECTION 3.2.1.

2. RS-232 PIN ASSIGNMENTS SHOWN FOR EXAMPLE. CONNECT TO ANY AVAILABLE GDU 116 SERIAL PORT.

3. INTERNAL INTERCOM INTEGRATION NOT SUPPORTED VIA RS-232 INTERFACE.

4. APPLIES TO REMOTE GTR RADIO ONLY. THE ID STRAP IS USED TO ASSIGN THE 205X(R) AS EITHER COM1 OR COM2 IN THE SYSTEM. LEAVE PIN 14 OPEN TO IDENTIFY AS COM 1, AND CONNECT PIN 14 TO 35 TO IDENTIFY IT AS COM 2.

REFER TO TABLE C-13 FOR INTERFACING CONFIGURATION INFORMATION.

Figure B-2.6 GTR 205(R)(x) Interconnect

GTR 200(B)/20 CAN CONNECTION METHOD

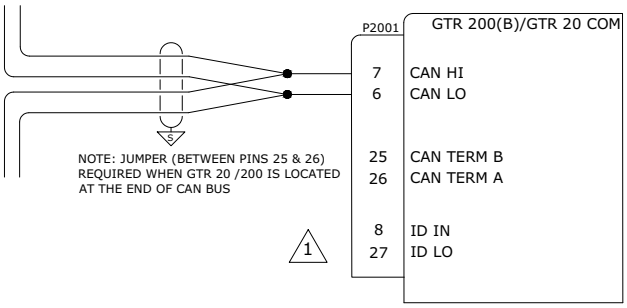

GTR 225 SERIAL CONNECTION METHOD

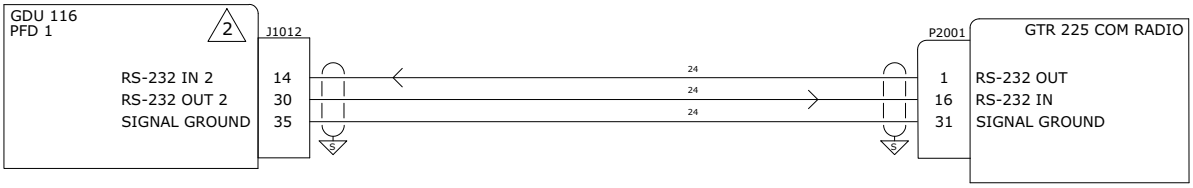

NOTES

1. THE ID STRAP INPUT IS FOR SETTING UP THE GTR 200(B)/20 TO BE IDENTIFIED IN THE CAN BUS SYSTEM AS EITHER A COM 1 OR A COM 2 RADIO. LEAVE PIN 8 OPEN TO IDENTIFY THE GTR 200(B)/20 AS COM 1, AND CONNECT PIN 8 TO 27 TO IDENTIFY IT AS COM 2.

2. RS-232 PIN ASSIGNMENTS SHOWN FOR EXAMPLE. CONNECT TO ANY AVAILABLE GDU 116 SERIAL PORT.

REFER TO TABLE C-9 FOR INTERFACING CONFIGURATION INFORMATION.

Figure B-2.7 GTR 200(B)/20/225 Interconnect

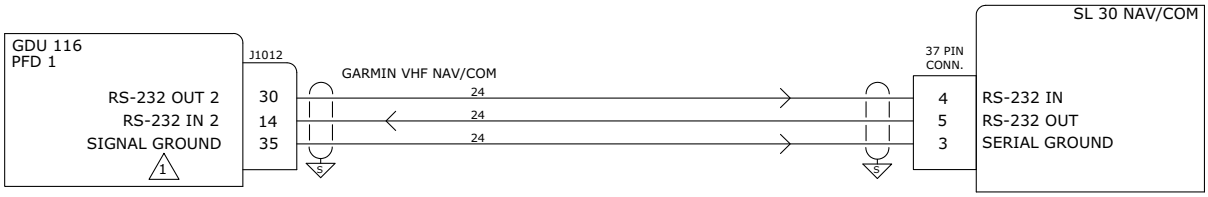

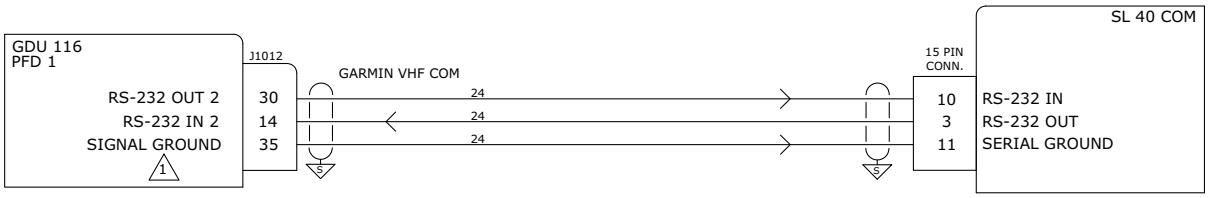

NOTES

1 RS-232 PIN ASSIGNMENTS SHOWN FOR EXAMPLE. CONNECT TO ANY AVAILABLE GDU 116 SERIAL PORT.

REFER TO TABLE C-16 (SL30) OR TABLE C-15 (SL40) FOR INTERFACING CONFIGURATION INFORMATION.

Figure B-2.8 SL30/SL40 Interconnect

NOTE: THIS INTERFACE EXAMPLE DRAWING IS NOT SUFFICIENT FOR INSTALLATION OF A GNS 4XX(W)/5XX(W) SERIES PRODUCT. PLEASE REFERENCE THE APPROPRIATE INSTALLATION DOCUMENTATION FOR THE GNS 4XX(W)/5XX(W) SERIES PRODUCTS FOR COMPREHENSIVE INSTALLATION AND CONFIGURATION INFORMATION.

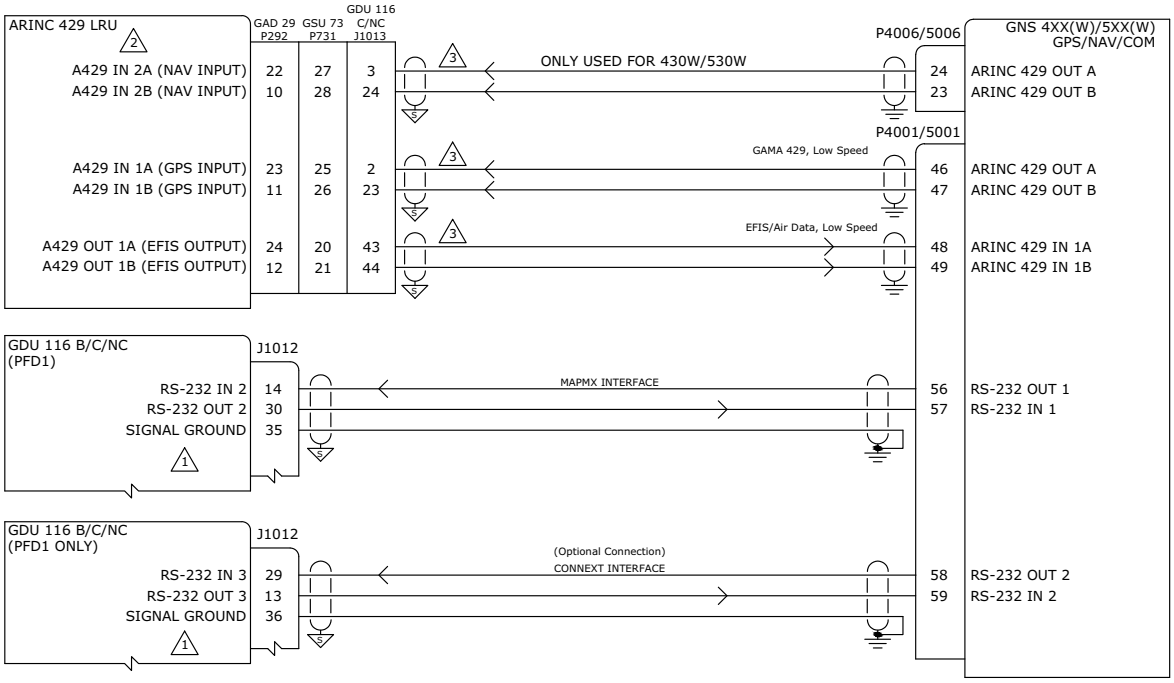

NOTES

1. RS-232 PIN ASSIGNMENTS SHOWN FOR EXAMPLE. CONNECT TO ANY AVAILABLE GDU 116 SERIAL PORT.

2. THE AXIS GDU WILL USE GNS SERIES NAVIGATOR ARINC 429 DATA USING ANY AVAILABLE ARINC 429 PORT IN THE SYSTEM (GAD 29, GSU 73, GDU 116 CONNECTOR J1013). A G5 IN THE SYSTEM CAN ONLY RECEIVE ARINC 429 DATA FROM A GNS SERIES NAVIGATOR, VIA GAD 29 OR GSU 73. USE GAD29 IF AVAILABLE. ARINC 429 PIN ASSIGNMENTS SHOWN FOR EXAMPLE, CONNECT TO ANY AVAILABLE ARINC 429 PORT.

3. ARINC 429 SDI SELECTED IN GNS SERIES NAVIGATOR ARINC 429 PORT CONFIGURATION PAGE MUST MATCH SDI DISPLAYED IN AXIS GNS MODIFY PAGE. THE EFIS OUTPUT ARINC 429 PORT CAN BE PARALLELED TO TWO EXTERNAL NAVIGATORS, IF BOTH REQUIRE THIS DATA FROM THE AXIS SYSTEM.

REFER TO TABLE C-7 FOR INTERFACING CONFIGURATION INFORMATION.

Figure B-2.9 Single GNS 430W/530W Interconnect

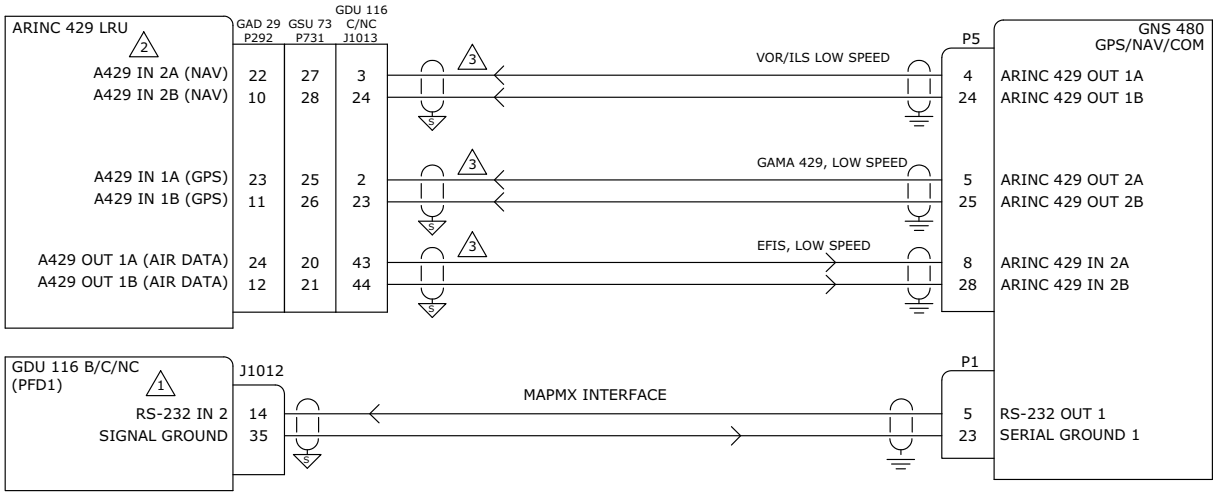

NOTES

1. RS-232 PIN ASSIGNMENTS SHOWN FOR EXAMPLE. CONNECT TO ANY GDU 116 SERIAL PORT.

2. THE AXIS GDU WILL USE GNS 480 ARINC 429 DATA USING ANY AVAILABLE ARINC 429 PORT IN THE SYSTEM (GAD 29, GSU 73, GDU 116 CONNECTOR J1013). A G5 IN THE SYSTEM CAN ONLY RECEIVE ARINC 429 DATA FROM A GNS 480 VIA GAD 29 OR GSU 73. USE GAD29 IF AVAILABLE. ARINC 429 PIN ASSIGNMENTS SHOWN FOR EXAMPLE, CONNECT TO ANY AVAILABLE ARINC 429 PORT.

3. ARINC 429 SDI SELECTED IN GNS 480 ARINC 429 PORT CONFIGURATION PAGE MUST MATCH SDI DISPLAYED IN AXIS GNS 480 MODIFY PAGE.

REFER TO TABLE C-8 FOR INTERFACING CONFIGURATION INFORMATION.

Figure B-2.10 GNS 480 Interconnect

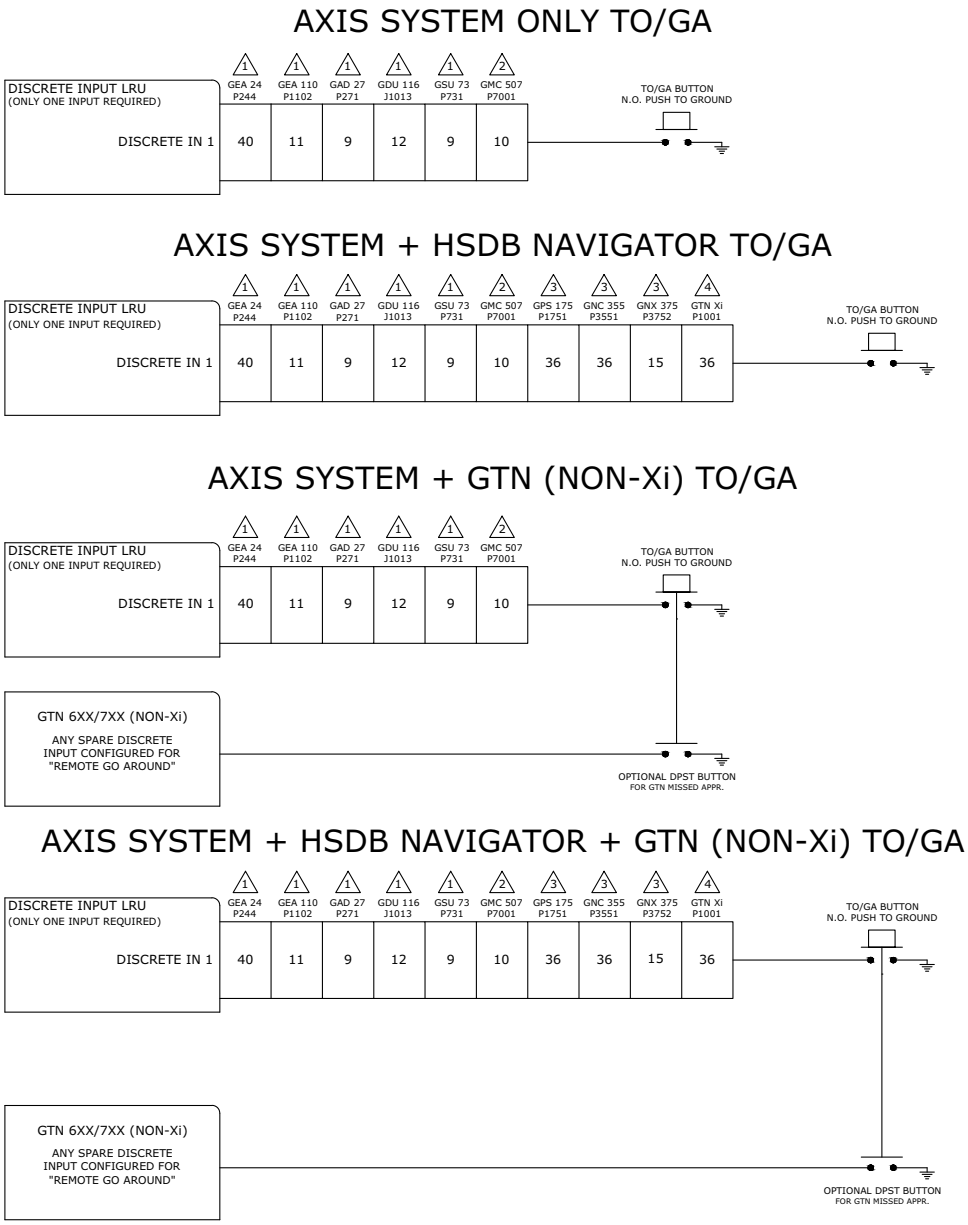

NOTES

1. USE ANY CONFIGURABLE DISCRETE INPUT IN THE SYSTEM CONFIGURED FOR AFCS TO/GA. NOT ALL POSSIBLE OPTIONS ARE SHOWN. GENERAL PURPOSE INPUTS ON GEA 24 ARE ALSO AVAILABLE TO BE USED FOR THIS PURPOSE.

2. GMC 507 PIN 10 IS HARD CODED FOR AFCS TO/GA.

3. GPS 175, GNC 355, GNX 375 HAVE A SINGLE PIN HARD CODED TO REMOTE GO AROUND.

4. GTN XI DISCRETE INPUT SHOWN FOR EXAMPLE, USE ANY CONFIGURABLE DISCRETE INPUT.

Figure B-2.11 TO/GA Switch Interconnect

B.3 Transponder Interconnects

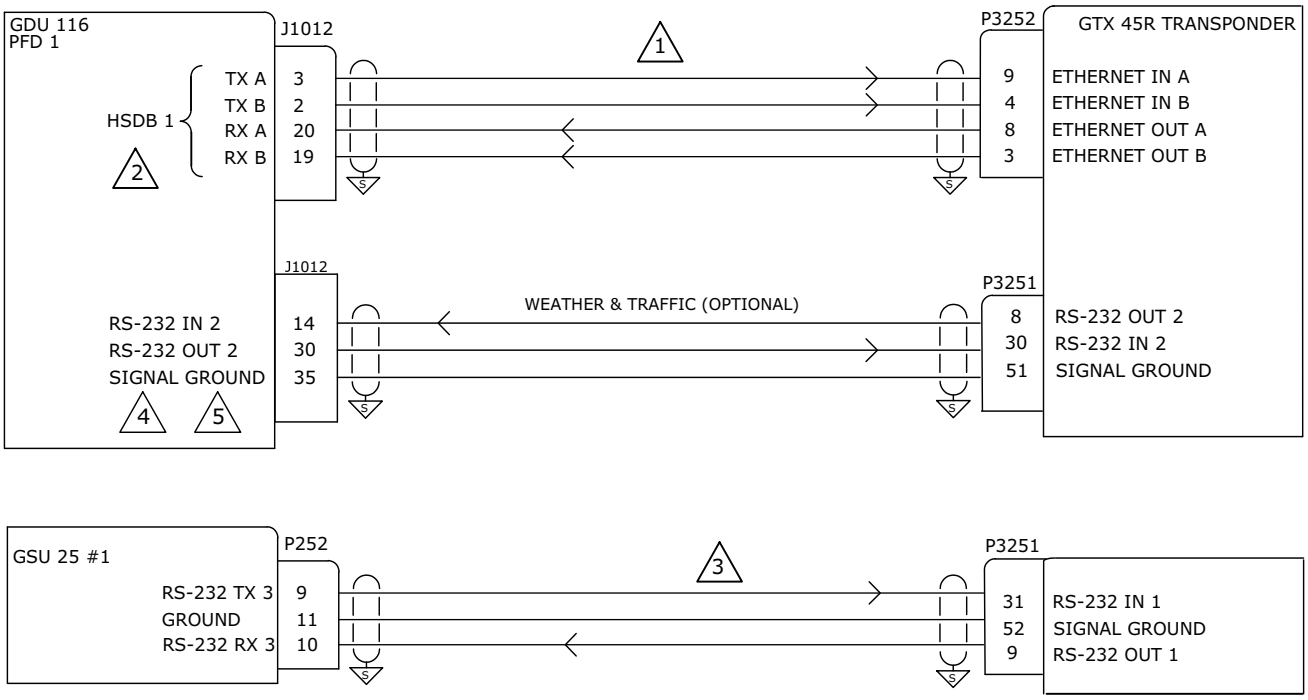

NOTES

1. HSDB IS RECOMMENDED, BUT NOT REQUIRED FOR GTX 45R.

2. USE ANY AVAILABLE HSDB PORT, IN COMPLIANCE WITH REQUIREMENTS LISTED IN SECTION 3.2.1 HSDB ARCHITECTURE.

3. RS-232 CONNECTION REQUIRED IN ADDITION TO HSDB NETWORK CONNECTION FOR GTX 45R.

4. RS-232 PIN ASSIGNMENTS SHOWN FOR EXAMPLE. CONNECT TO ANY AVAILABLE GDU 116 SERIAL PORT.

5. ONLY REQUIRED TO BE CONNECTED TO ONE AXIS RS-232 PORT IN THE SYSTEM. WEATHER AND TRAFFIC ARE SHARED ACROSS DISPLAYS.

REFER TO TABLE C-23 FOR INTERFACING CONFIGURATION INFORMATION.

Figure B-3.1 GTX 45R Transponder Connection Method Interconnect

GTX 345(D)(R) HSDB CONNECTION OPTION (RECOMMENDED)

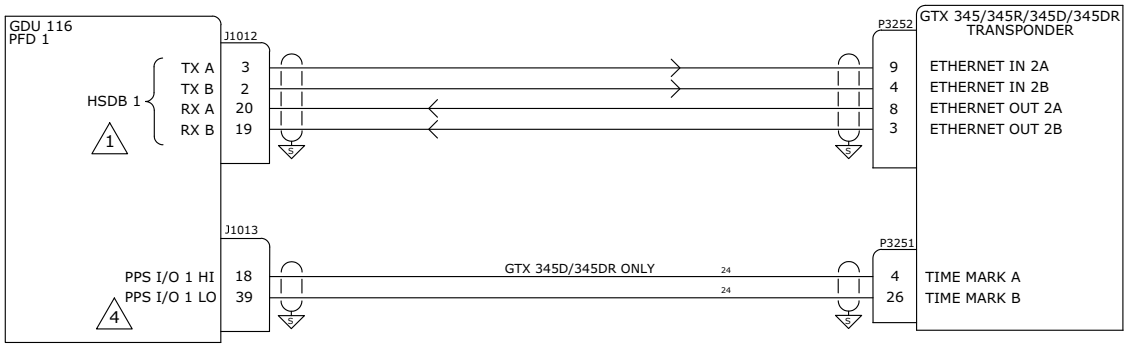

GTX 345(D)(R)/45R SERIAL CONNECTION OPTION

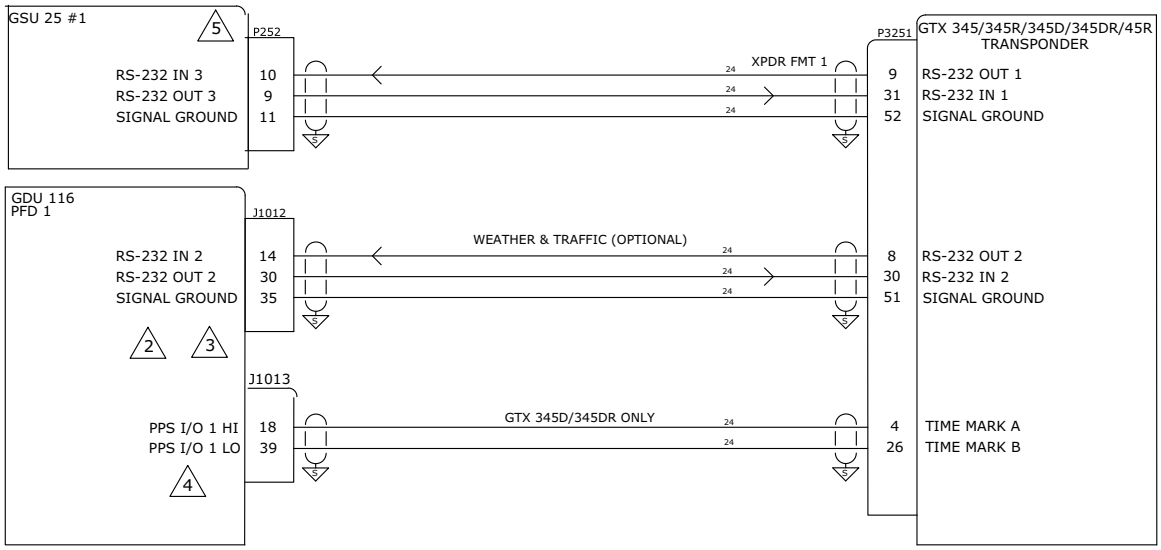

NOTES

1. USE ANY AVAILABLE HSDB PORT, IN COMPLIANCE WITH REQUIREMENTS LISTED IN SECTION 3.2.1 HSDB ARCHITECTURE.

2. RS-232 PIN ASSIGNMENTS SHOWN FOR EXAMPLE. CONNECT TO ANY AVAILABLE GDU 116 SERIAL PORT.

3. ONLY REQUIRED TO BE CONNECTED TO ONE AXIS RS-232 PORT IN THE SYSTEM. WEATHER AND TRAFFIC ARE SHARED ACROSS DISPLAYS.

4. ONLY APPLICABLE TO GTX 345D OR 345DR MODEL TRANSPONDERS. GDU 116C OR NC REQUIRED. NOT APPLICABLE IF THE GTX 345D OR 345DR IS RECEIVING GPS DATA FROM A SOURCE OTHER THAN THE AXIS FLIGHT DISPLAY.

5. AN ADDITIONAL RS-232 CONNECTION CAN BE MADE BETWEEN THE GTX TRANSPONDER AND A #2 GSU 25, FOR ADDED SYSTEM REDUNDANCY.

REFER TO TABLE C-20 (GTX 345, GTX 345D) AND TABLE C-22 (GTX 345R, GTX 345DR) FOR CONFIGURATION INFORMATION

Figure B-3.2 GTX 345/345R/345D/345DR Transponder Interconnect

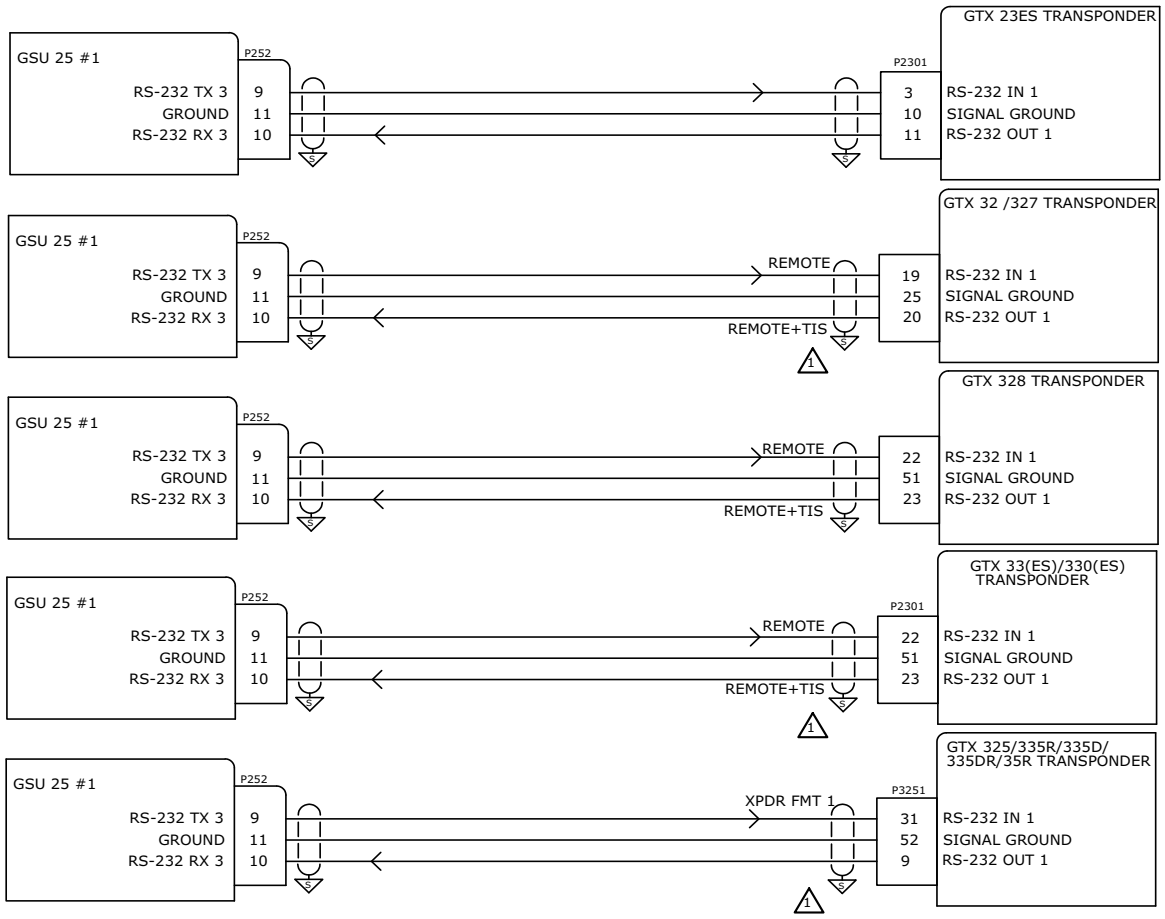

NOTES

1. GTX 33(ES), GTX 32, GTX 335R, GTX 335DR, AND GTX 35R DO NOT REQUIRE ADDITIONAL INTERFACING CONFIGURATION TO COMMUNICATE WITH THE AXIS SYSTEM.

REFER TO TABLE C-24 (GTX 327/328/330/330ES) AND TABLE C-25 (GTX 325/335/335D) FOR INTERFACING CONFIGURATION INFORMATION

Figure B-3.3 GTX 23ES/32/327/328/33(ES)/330(ES)/325/335/335D/335R/335DR/35R XPDR Interconnect

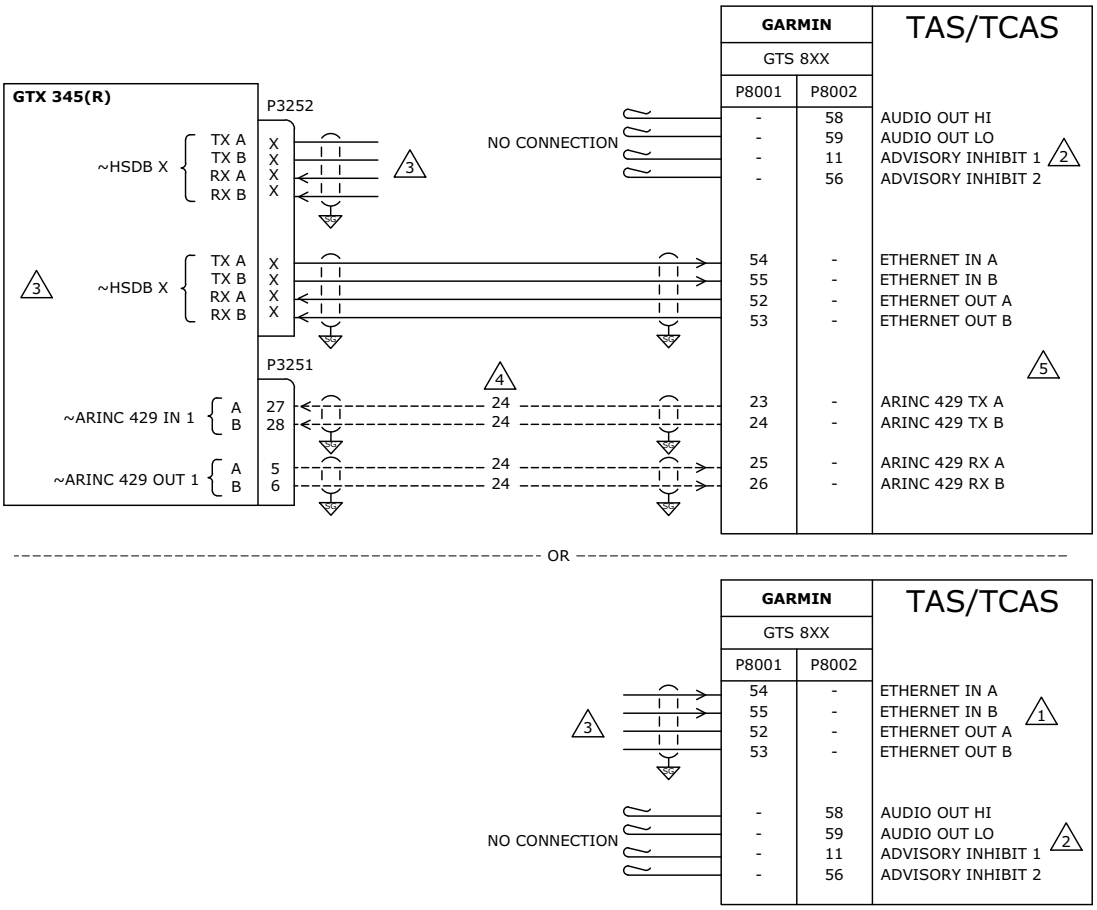

NOTES

1. TO PREVENT CONFLICTING TRAFFIC INFORMATION, GTS 8XX CONNECTION TO THE AXIS FLIGHT DISPLAY IS NOT ALLOWED IF A GNX 375 IS INSTALLED.

2. CAP AND STOW, OR REMOVE THE AUDIO CONNECTION WIRING FOR THIS TAS/TCAS.

3. REFERENCE SECTION 3.2.1 FOR HSDB ARCHITECTURE.

4. IF HSDB INTERFACE BETWEEN GTX AND GTS IS CONNECTED, ARINC CONNECTIONS ARE NOT REQUIRED.

5. GTX TO GTS CONNECTIONS ARE SHOWN FOR REFERENCE ONLY.

Figure B-3.4 GTS 8XX and 8X5 Traffic Receiver Interconnect

B.4 Weather and Traffic Interconnects

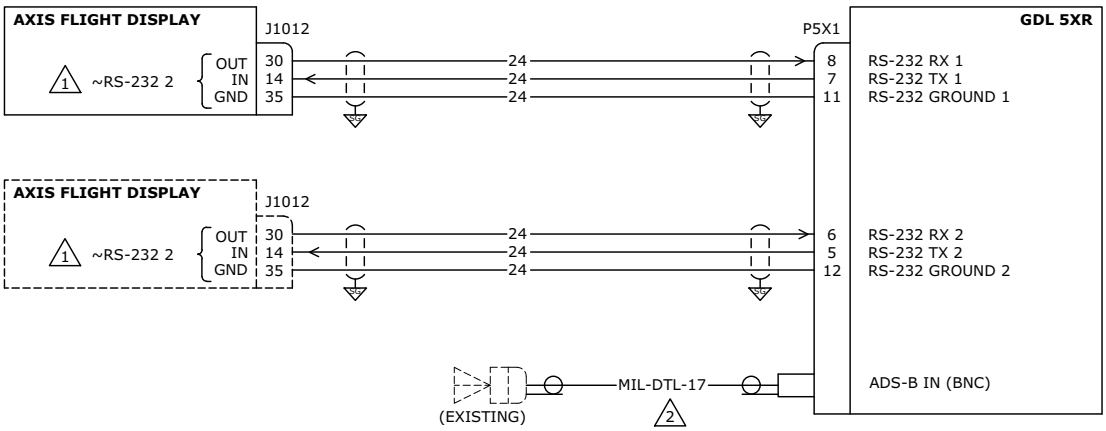

NOTES

1. CONNECT TO ANY AVAILABLE RS-232 PORT ON THE GDU. ONLY ONE RS-232 CONNECTION TO THE GDL5XR IS REQUIRED.ATALINK WEATHER WILL BE SHARED TO OTHER DISPLAYS VIA HSDB. OPTIONALLY, THE GDL 5XR CAN BE CONNECTED DIRECTLY TO A SECOND DISPLAY FOR REDUNDANCY.

2. REFER TO SECTION 4.2 FOR COAX CABLE GUIDANCE.

Figure B-4.1 GDL 50/52(R) Interconnect

B.5 Autopilot Interconnects

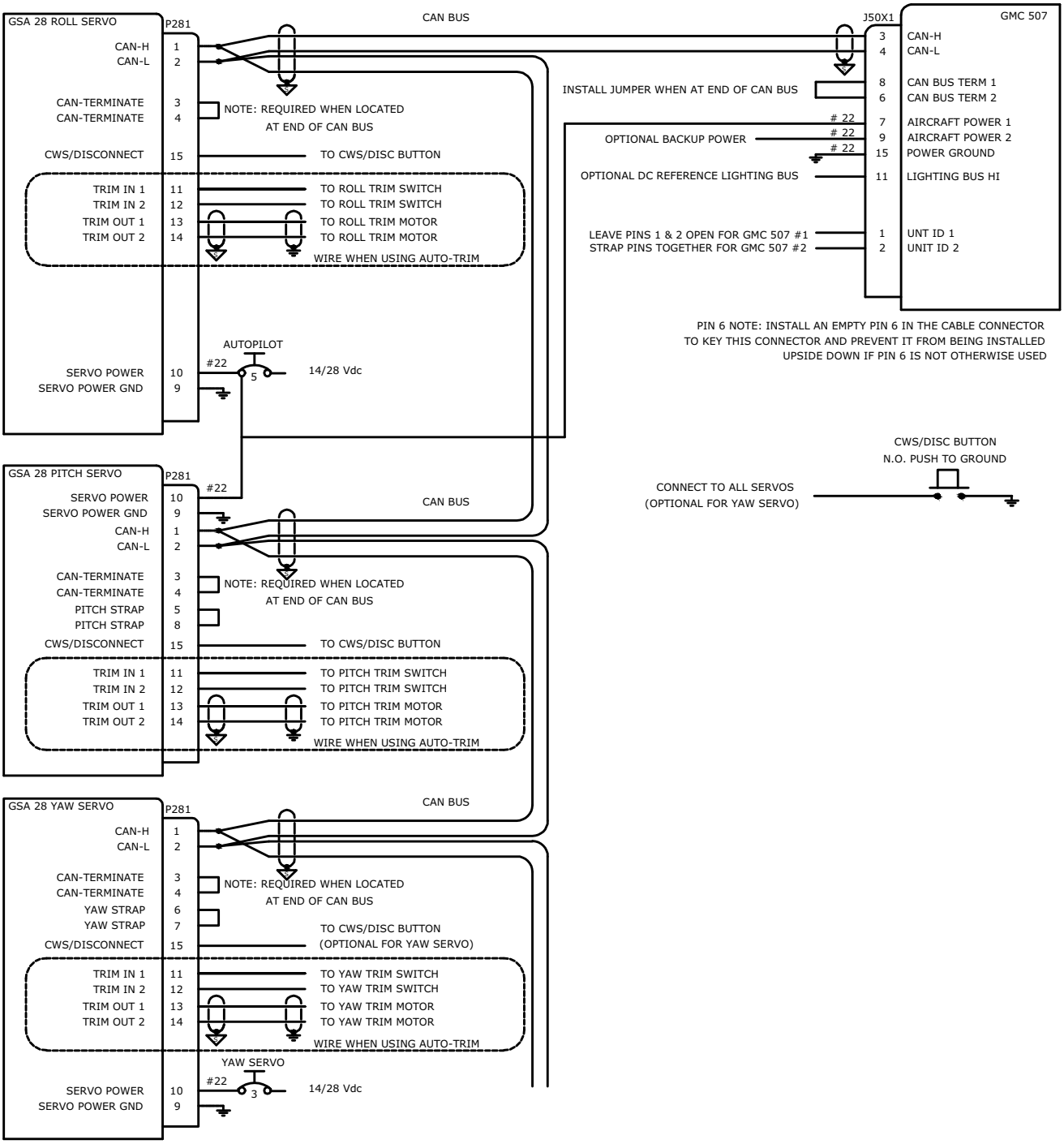

Figure B-5.1 GMC 507/GSA 28 Interconnect

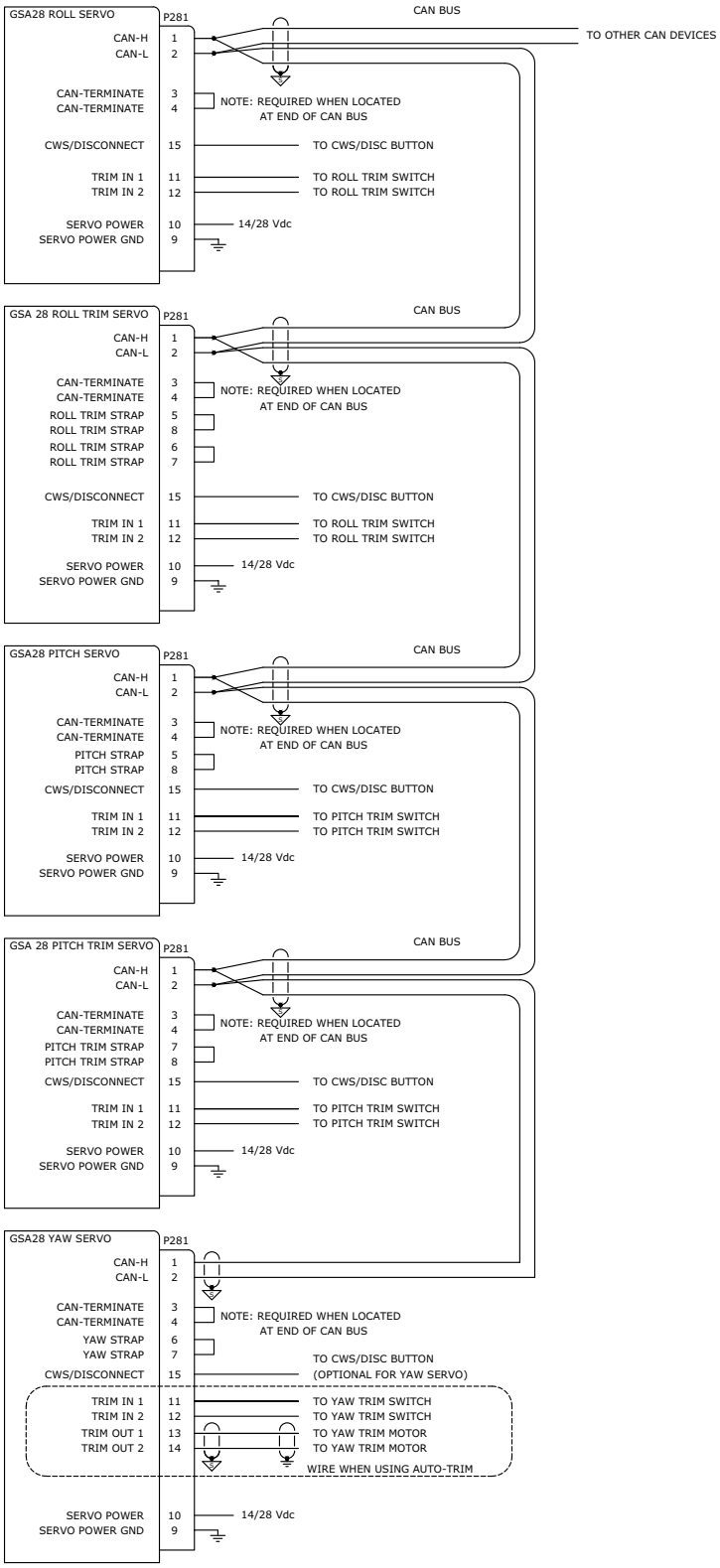

Figure B-5.2 GSA 28 Roll and Pitch Trim Interconnect

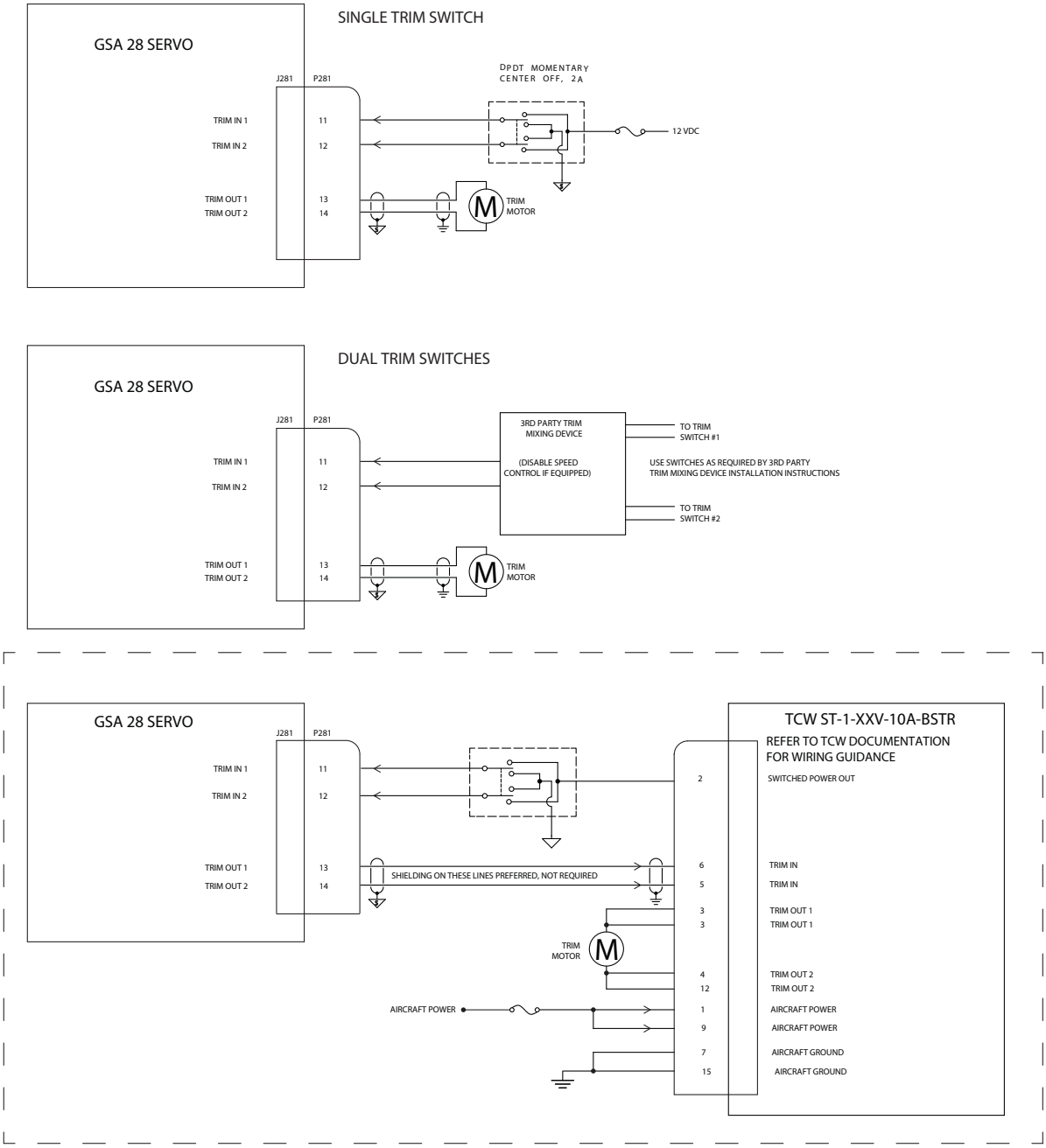

Figure B-5.3 Trim Switch Interconnect

B.6 GAD 27 Interconnects

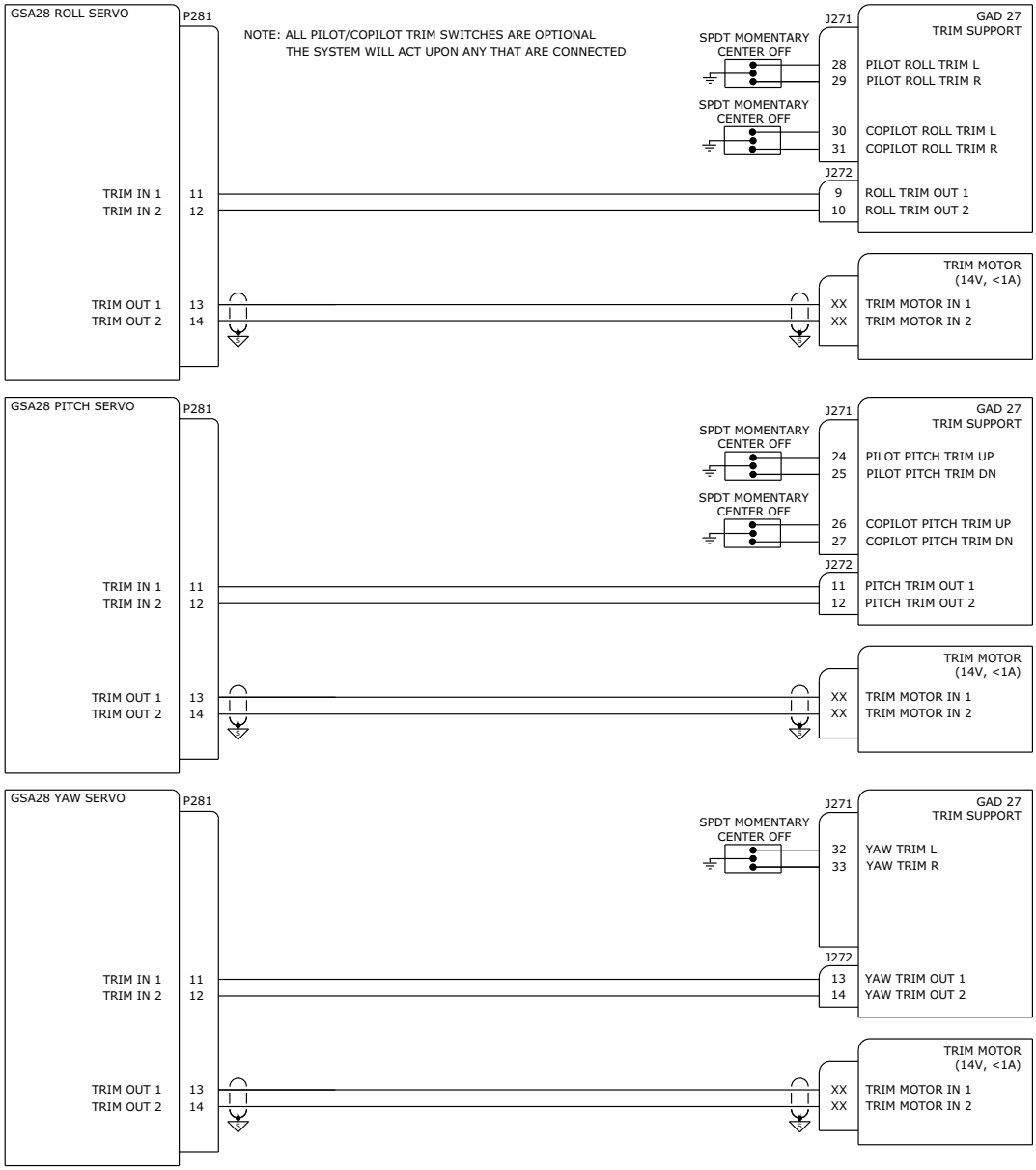

Figure B-6.1 GAD 27 Trim Control Interconnect

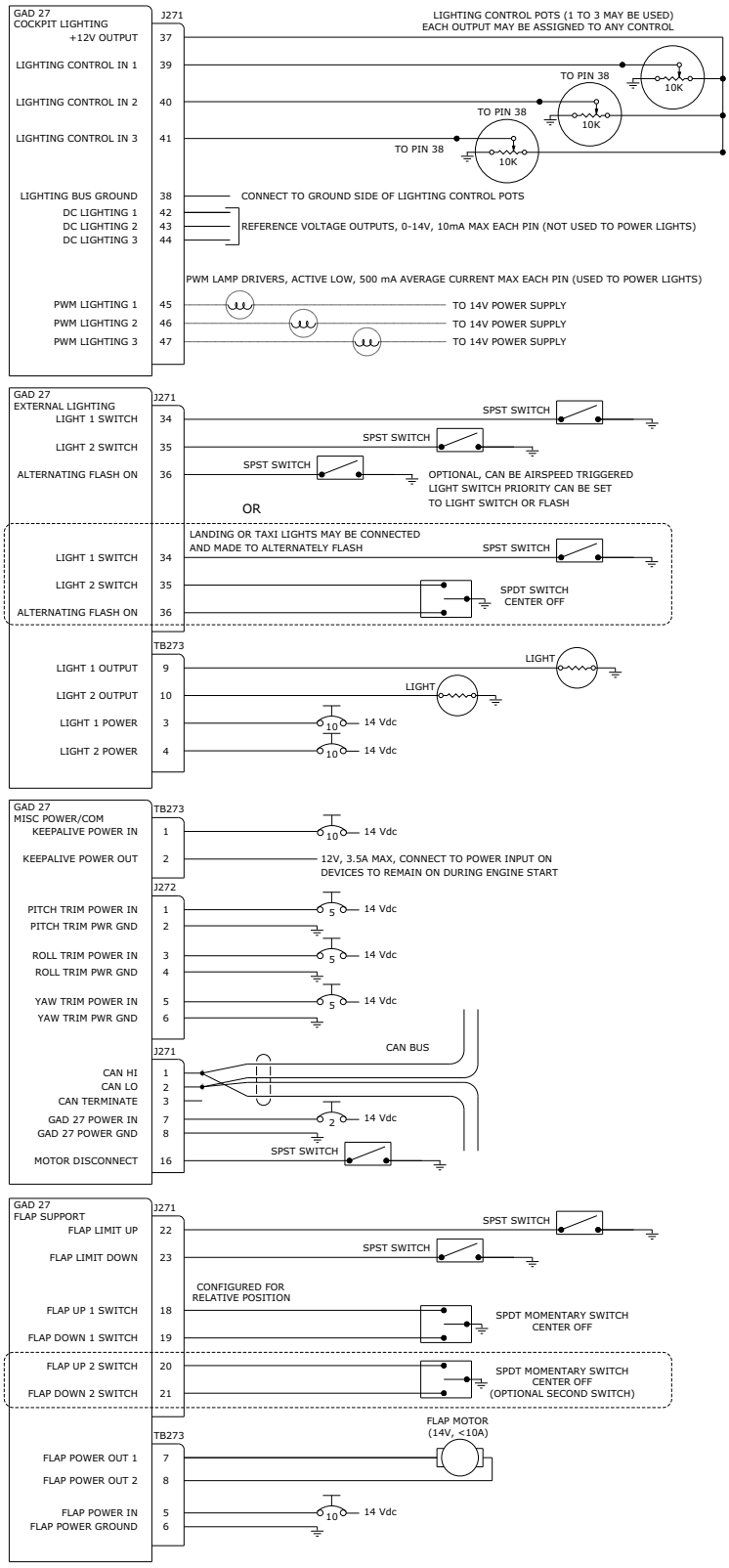

Figure B-6.2 GAD 27 External and Cockpit Lighting, Power and Flaps Interconnect

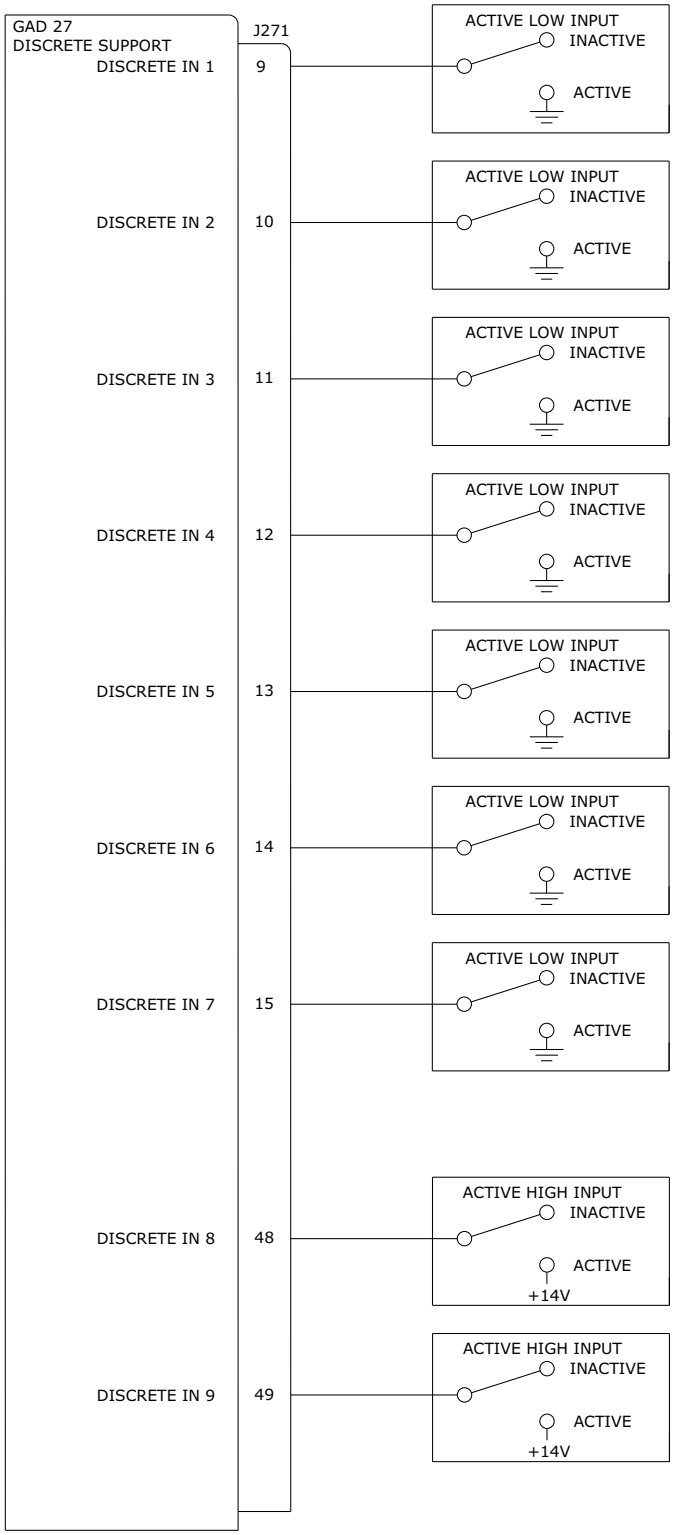

Figure B-6.3 GAD 27 Discrete Input Interconnect

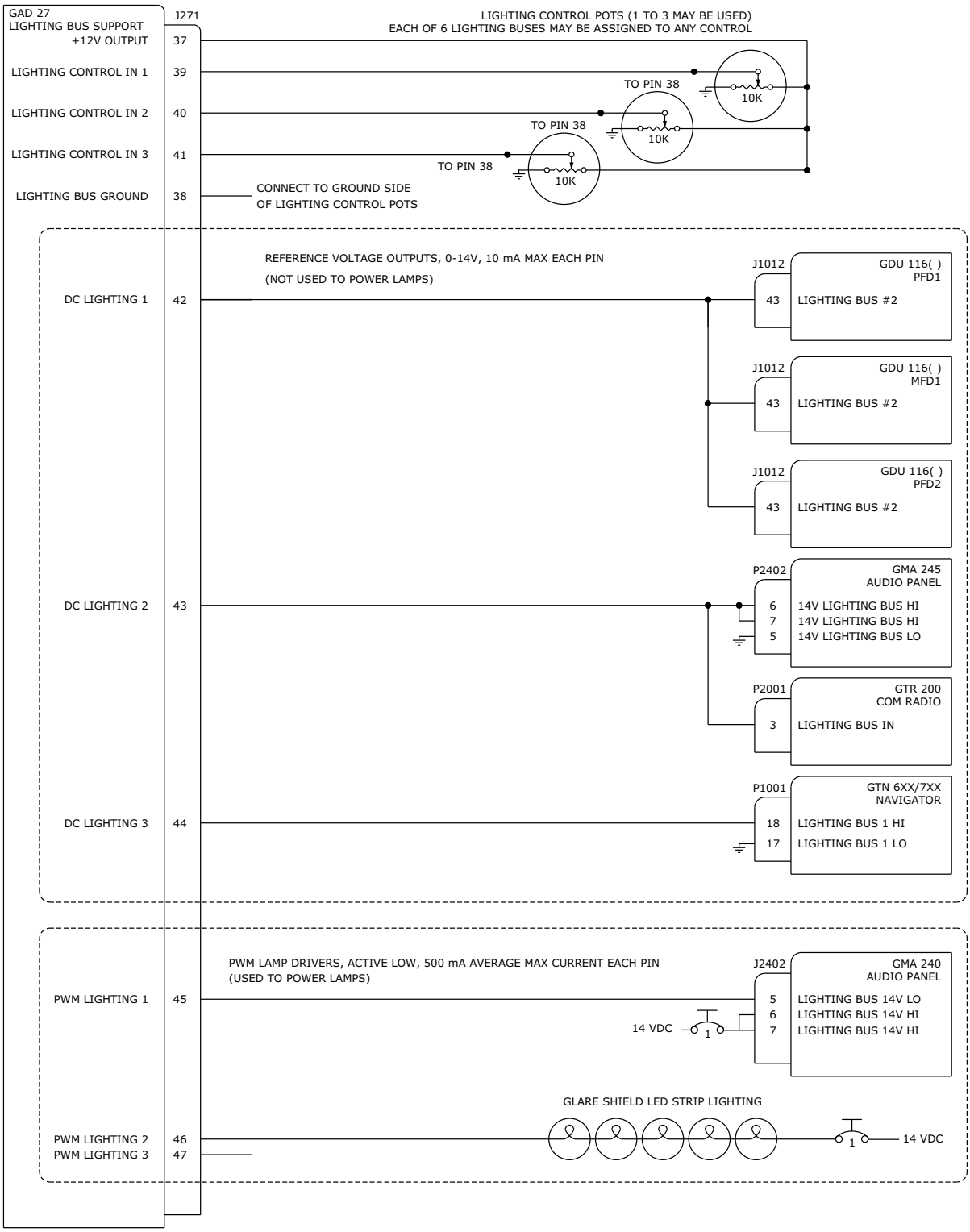

Figure B-6.4 GAD 27 Lighting Bus Control Interconnect

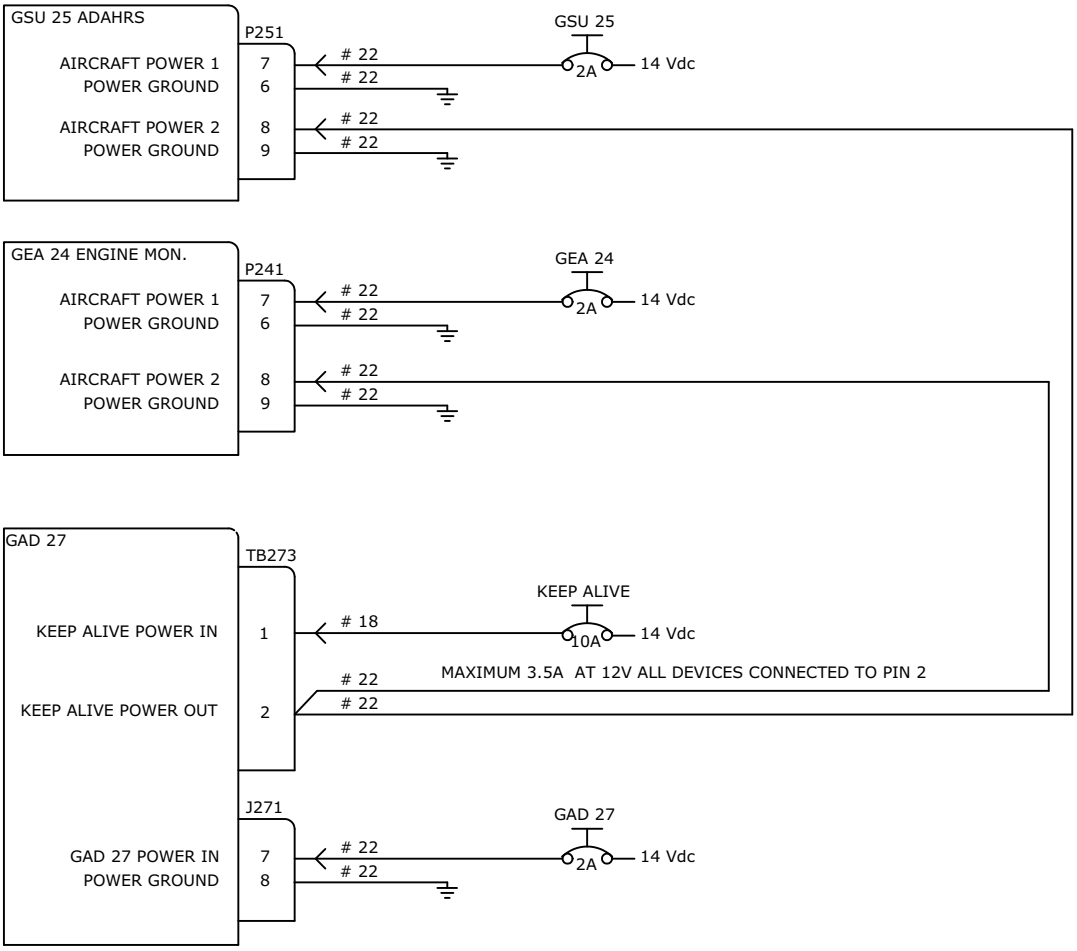

Figure B-6.5 GAD 27 Keep Alive Power Interconnect

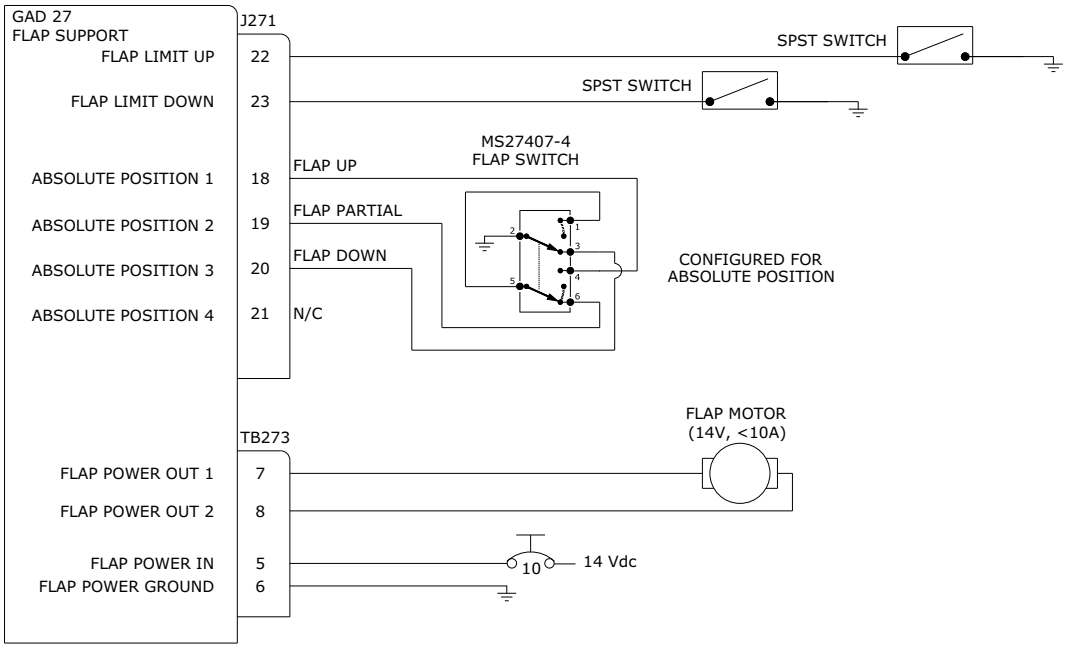

Figure B-6.6 GAD 27 Absolute Position Flaps Control (3-position Switch) Interconnect

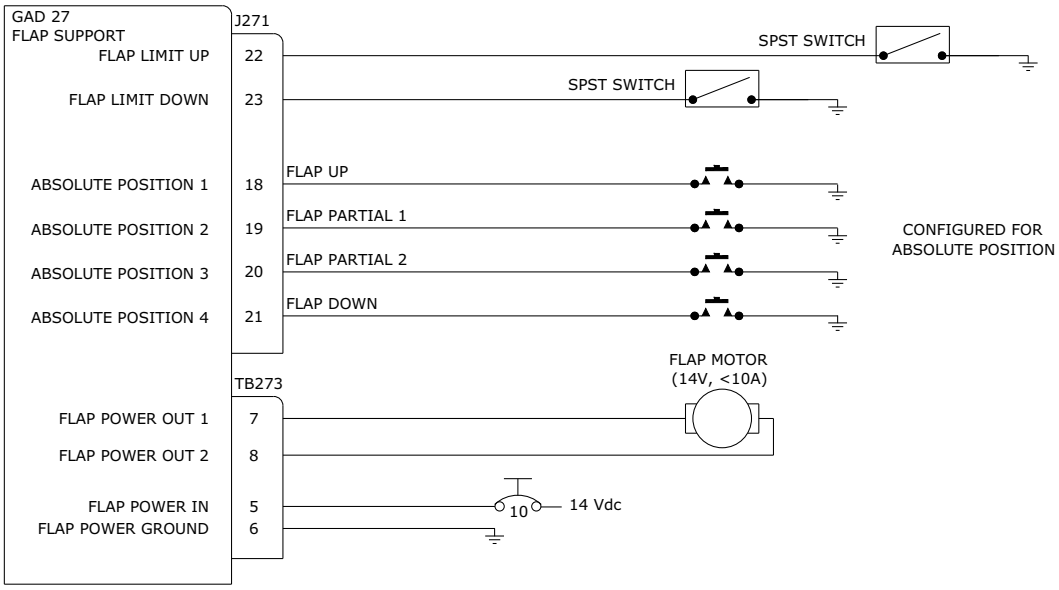

Figure B-6.7 GAD 27 Absolute Position Flaps Control (Push-Button Switch) Interconnect

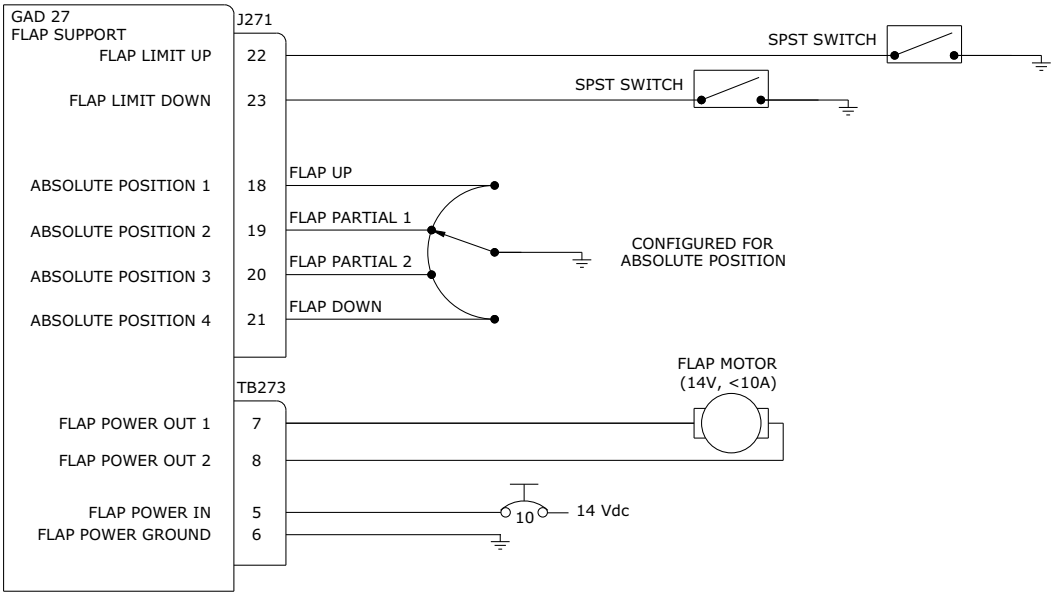

Figure B-6.8 GAD 27 Absolute Position Flaps Control (Rotary Switch) Interconnect

B.7 Miscellaneous Interconnects

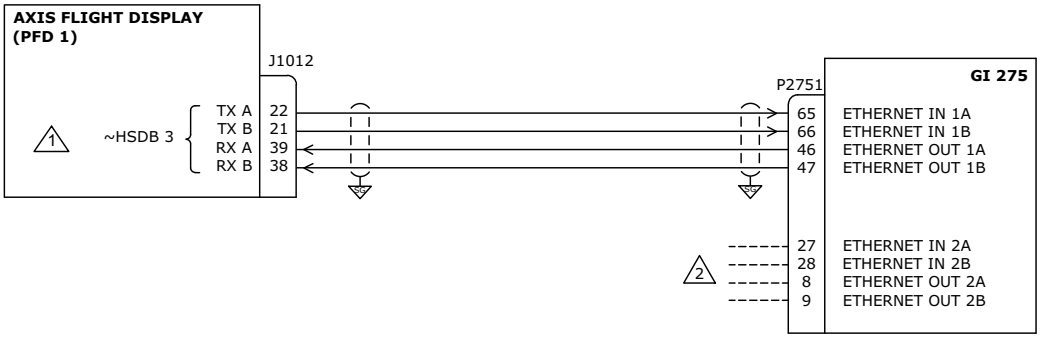

NOTES

1. REFER TO SECTION 3.2.1 FOR HSDB ARCHITECTURE.

2. CONNECT TO A SECOND AXIS FLIGHT DISPLAY IF INSTALLED. OTHERWISE, CONNECT TO AN HSDB NAVIGATOR IF INSTALLED.

Figure B-7.1 Standby Flight Display (GI 275) Interconnect

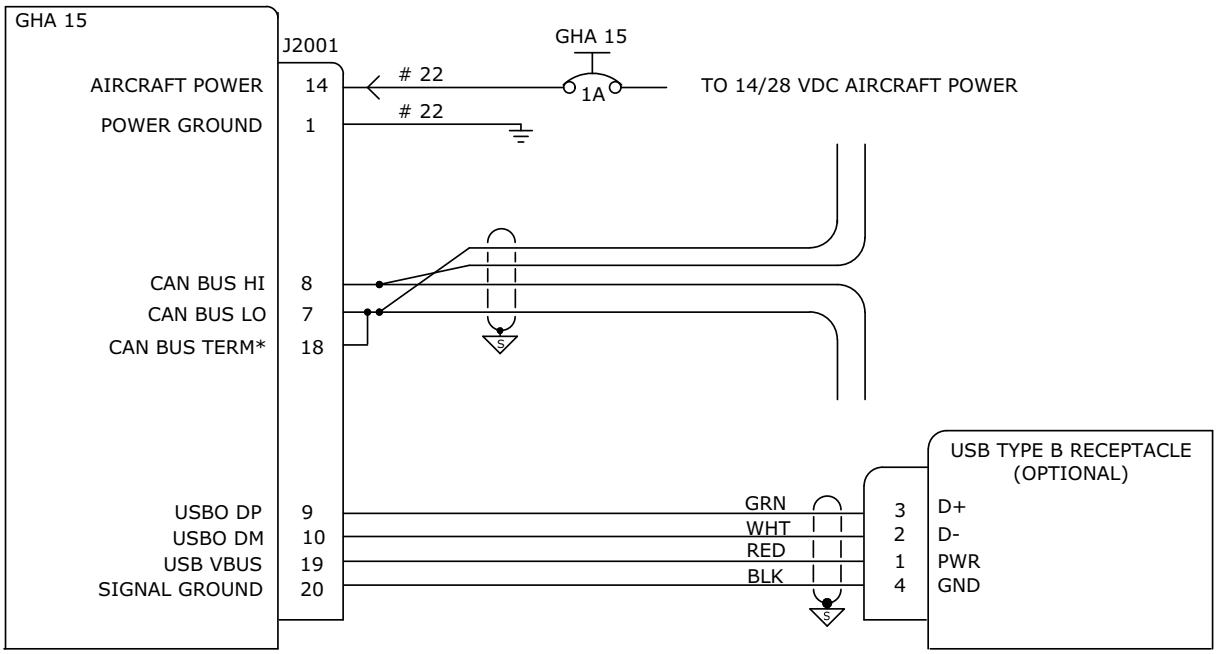

*IF GHA 15 IS NOT LOCATED AT EITHER EXTREME END OF THE CAN BUS, LEAVE PIN 18 (CAN BUS TERM) UNCONNECTED.

Figure B-7.2 GHA 15 Radio AGL Interconnect

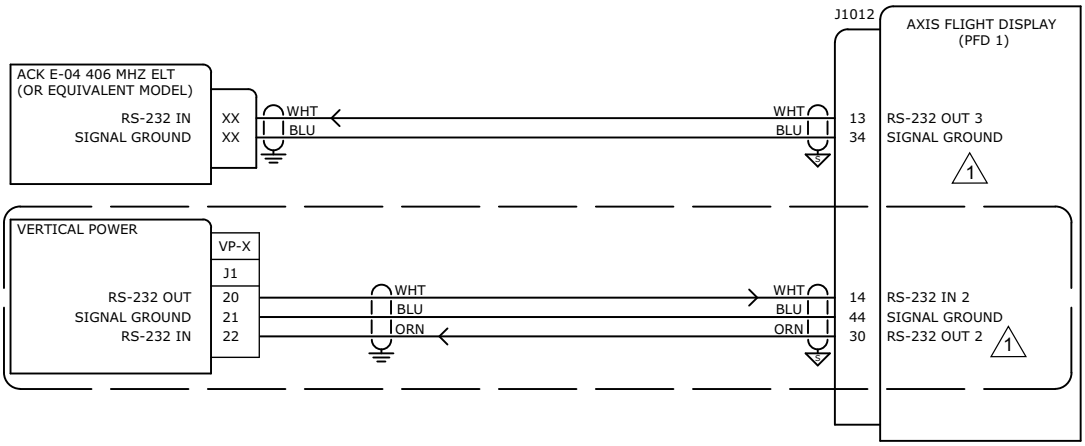

NOTES

1 ANY AVAILABLE AXIS DISPLAY RS-232 PORT CAN BE USED FOR ANY OF THESE CONNECTIONS.

Figure B-7.3 Serial Devices (ELT and Vertical Power VP-X) Interconnect

Figure B-7.4 Reserved

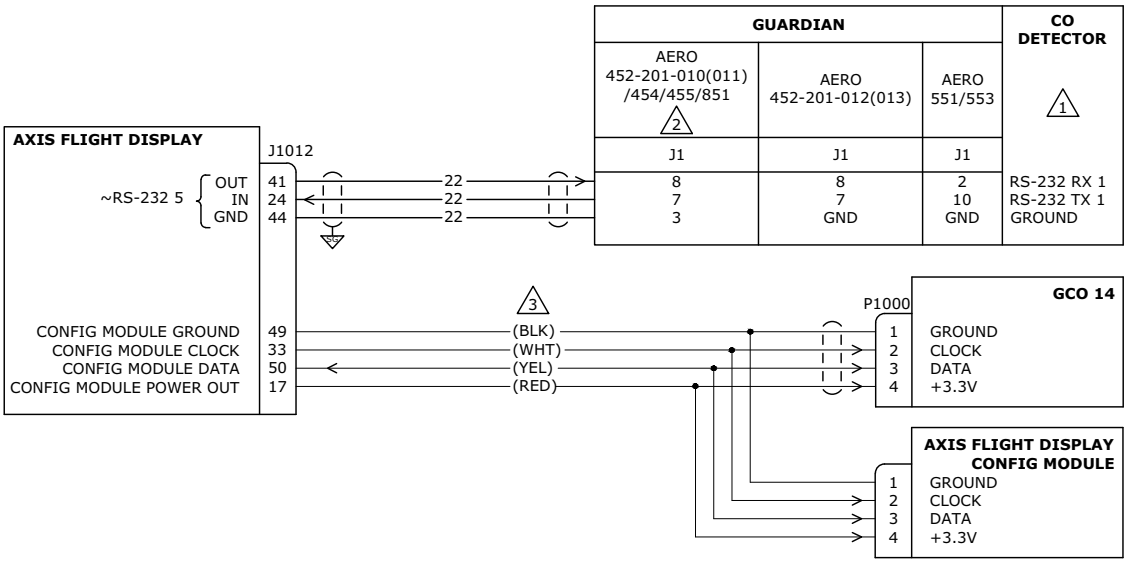

NOTES

1. REFERENCE GUARDIAN CO DETECTOR INSTALLATION MANUAL FOR FURTHER INFORMATION ABOUT CONFIGURATION SETTINGS AND CONNECTIONS REQUIRED FOR SYSTEM OPERATION.

2. FOR THE GUARDIAN MODEL 851 ONLY, IT IS ACCEPTABLE TO CONNECT TO ANY AVAILABLE RS-232 PORT.

3. CONFIGURATION MODULE IS MOUNTED IN THE BACKSHELL OF THE J1012 CONNECTOR. THE GCO 14 CABLE KIT (P/N 011-06537-10) INCLUDES A PREFABRICATED WIRE HARNESS TO CONNECT THE GCO 14, CONFIGURATION MODULE, AND AXIS FLIGHT DISPLAY.

Figure B-7.5 Carbon Monoxide Interconnect

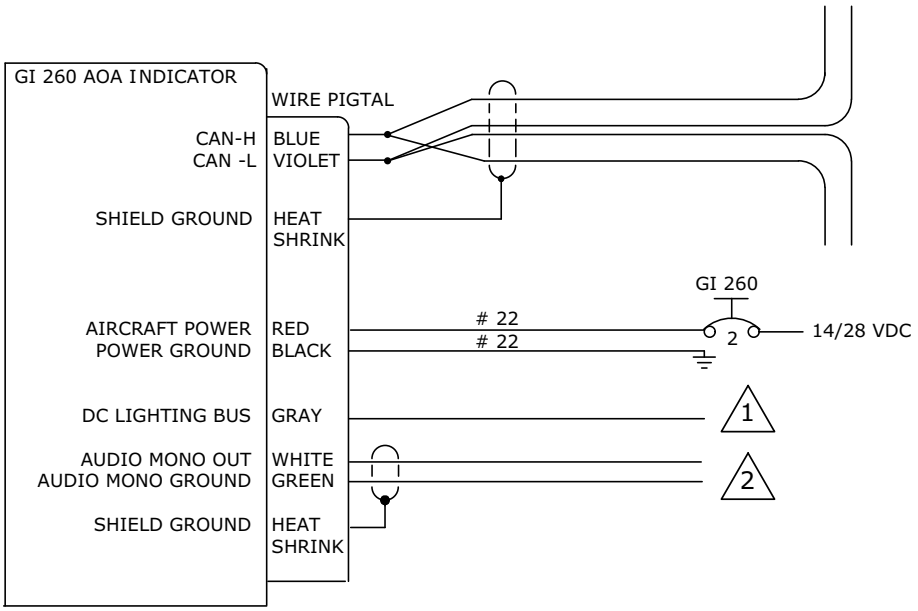

NOTES

1. 14/28 VDC AIRCRAFT LIGHTING BUS REFERENCE VOLTAGE OR LEAVE DISCONNECTED AND USE PHOTOCELL.

2. NOT REQUIRED FOR AXIS FLIGHT DISPLAYS.

Figure B-7.6 GI 260 Interconnect

B.8 Audio Interconnects

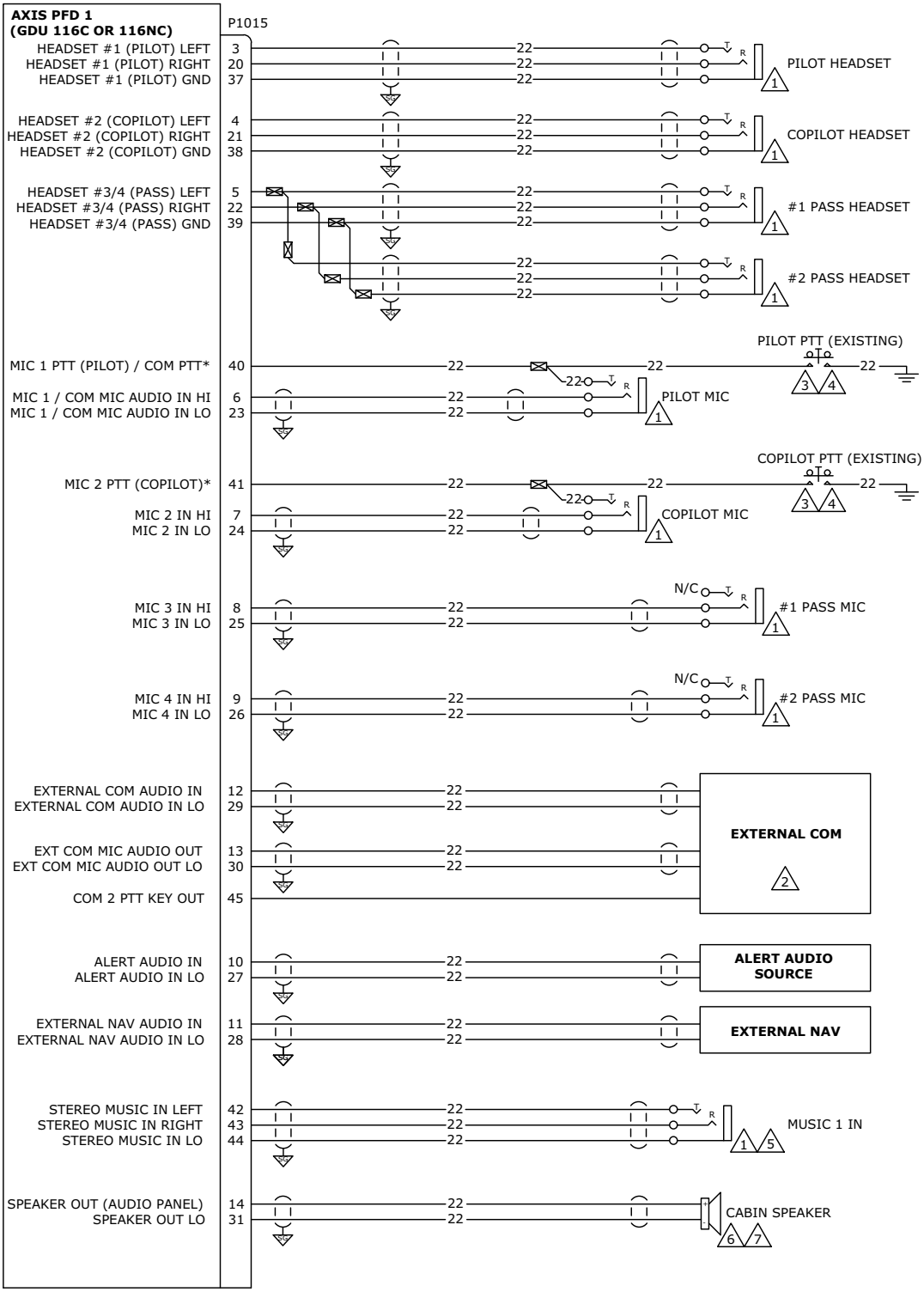

Figure B-8.1 AXIS Flight Display (C or N/C) Internal Audio Panel Interconnect Sheet 1 of 3

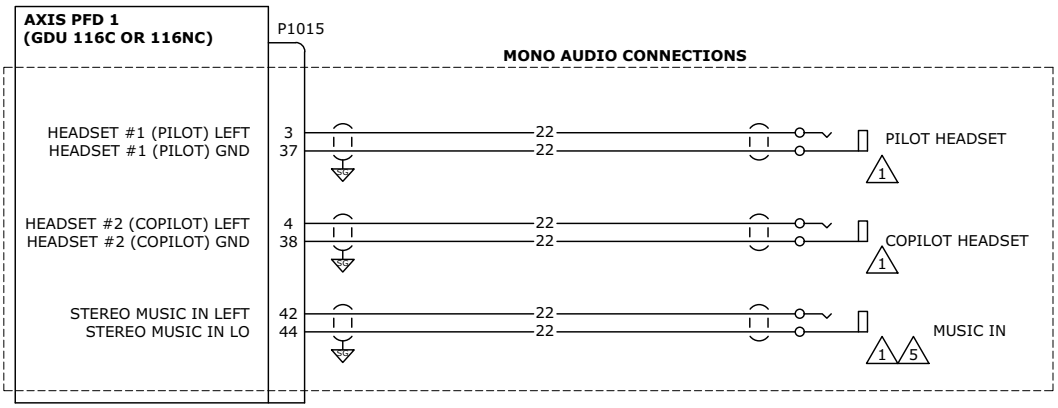

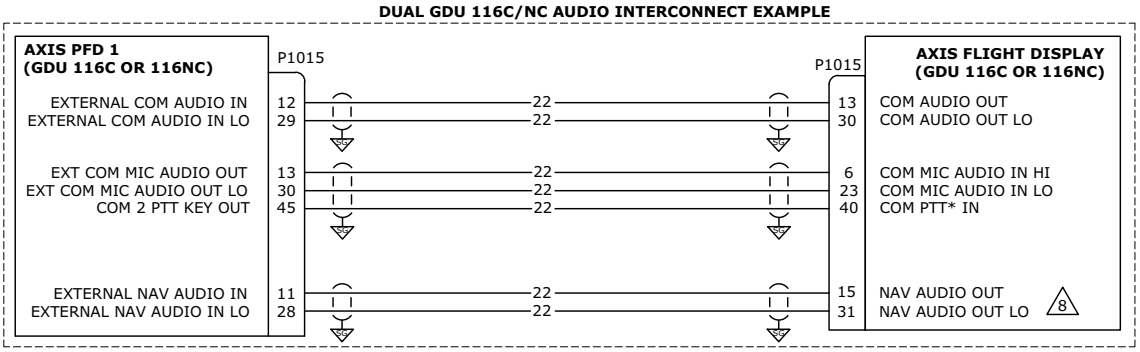

NOTES

ISOLATE JACK SLEEVE (MOUNTING NUT AND NUT PLATE) FROM AIRCRAFT CHASSIS. ALL HEADSET, MICROPHONE, AND MUSIC PHONE JACKS MUST BE ELECTRICALLY ISOLATED FROM GROUND. REFER TO THE FIGURE BELOW FOR HOW THE JACK IS ISOLATED. NOT ISOLATING WILL CAUSE GROUND LOOPS AND NOISE.

1

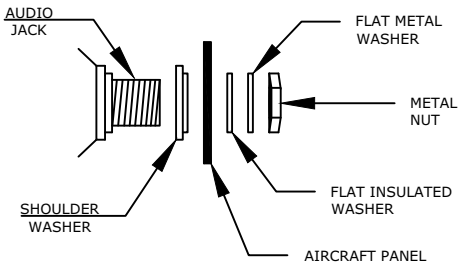

2 TRANSCEIVER INTERFACES CAN ALSO BE WIRED THROUGH SUITABLE JACKS AND CABLES TO HANDHELD COMS THAT HAVE HEADSET INTERFACE CAPABILITY. THE HANDHELD'S HEADSET OUTPUT (LEFT CHANNEL ONLY IF STEREO) CONNECTS TO THE GDU'S COM AUDIO IN HI AND COM AUDIO LO PINS, THE HANDHELD'S MIC INPUT CONNECTS TO GDU'S COM MIC AUDIO OUT HI AND COM AUDIO OUT LO PINS, AND THE HANDHELD'S PTT KEY CONNECTS TO GDU'S COM PTT KEY OUT. REFER TO TRANSCEIVER'S INSTRUCTION MANUAL.

3 THE CONNECTION BETWEEN PTT AND THE MIC JACK TIP IS REQUIRED IF HAND MICS WILL BE USED.

Figure B-8.1 AXIS Flight Display (C or N/C) Internal Audio Panel Interconnect Sheet 2 of 3

NOTES CONT'D

ALTERNATIVELY, BASED UPON AIRCRAFT INSTALLATION, PTT INPUT CAN BE CONNECTED AS FOLLOWS:

4

E GDU NAV-COM INTERCONNECT DIAGRAM

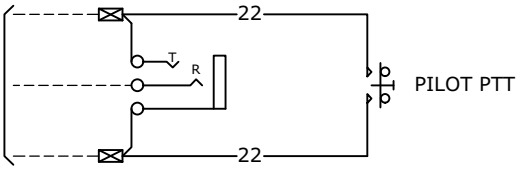

5

THE MUSIC LO SIGNALS ARE NOT THE SAME REFERENCE AS OTHER GROUNDS. THE MUSIC LO SIGNALS ARE PART OF A DIFFERENTIAL PAIR WITH THE RIGHT AND LEFT SIGNALS. IF THE MUSIC LO SIGNAL IS TIED TO A GROUND, THE MUSIC WILL CONTAIN NOISE, AND THE AUDIO QUALITY WILL BE DEGRADED.

6

DO NOT CONNECT THE SPEAKER GROUND RETURN TO THE AIRCRAFT CHASSIS. THE GROUND RETURN MUST GO TO THE GDU.

7

USE A MINIMUM 10 WATT SPEAKER.
USE 8 OHM SPEAKER FOR 28 VOLT SYSTEMS ONLY.
USE 4 OHM SPEAKER FOR 14 OR 28 VOLT SYSTEMS.

Figure B-8.1 AXIS Flight Display (C or N/C) Internal Audio Panel Interconnect Sheet 3 of 3

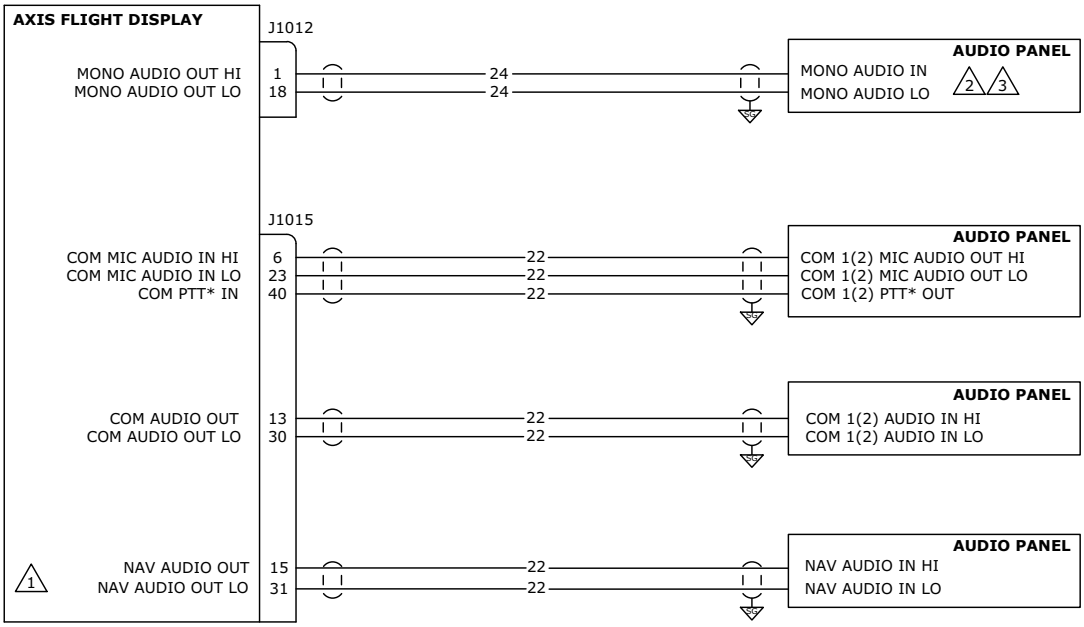

NOTES

1. ONLY APPLICABLE FOR GDU 116NC.

2. CONNECT TO AN UNSWITCHED AND UNMUTED PORT.

3. WHEN INSTALLING AXIS FLIGHT DISPLAYS WITH A GFC500 SYSTEM, DISCONNECT THE GMC507 INTERFACE TO THE AUDIO PANEL.

Figure B-8.2 AXIS Flight Display Alert and COM Audio Interface to EXT Audio Panel Interconnect

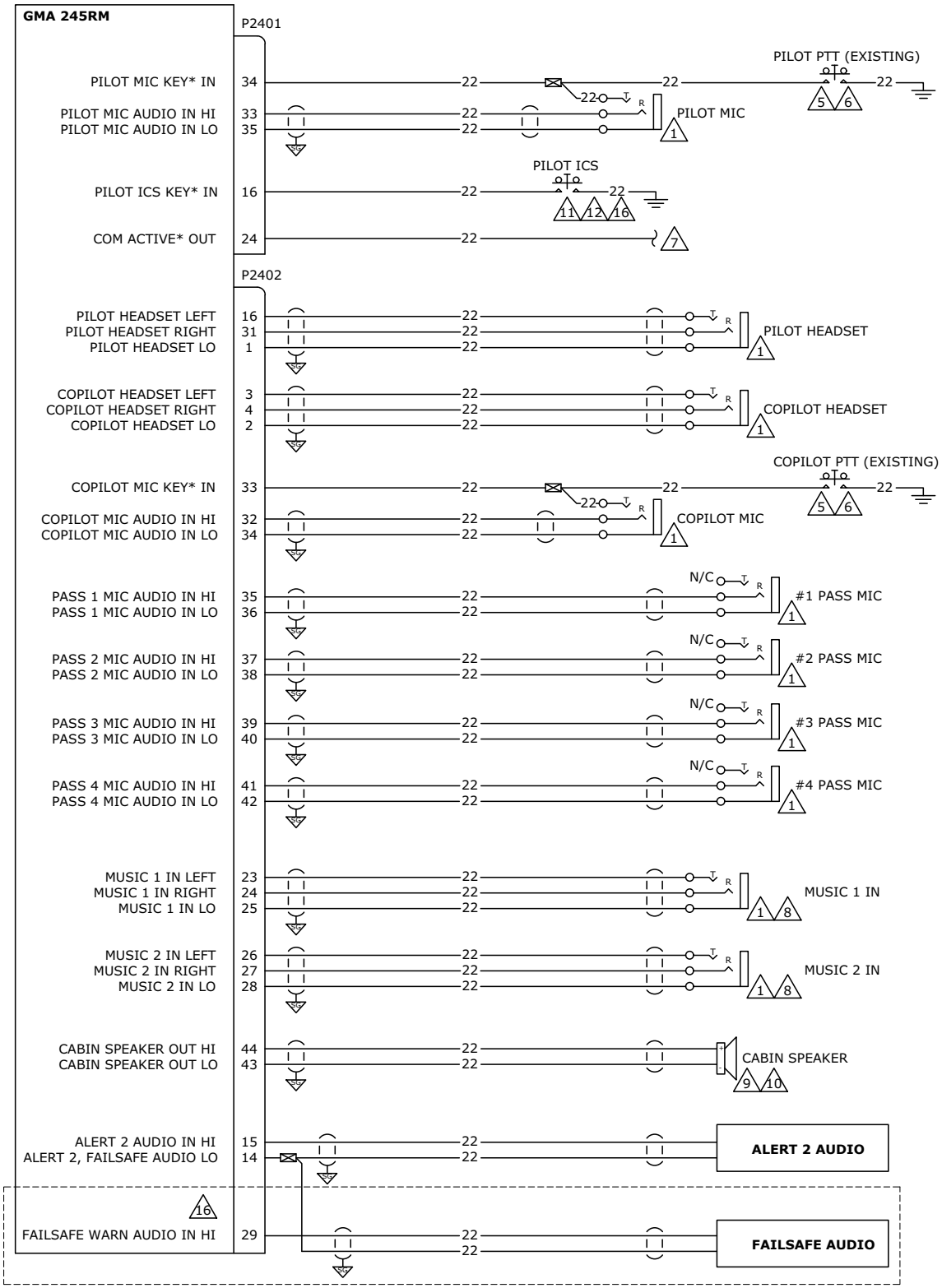

Figure B-8.3 GMA 245RM Interconnect
Sheet 1 of 6

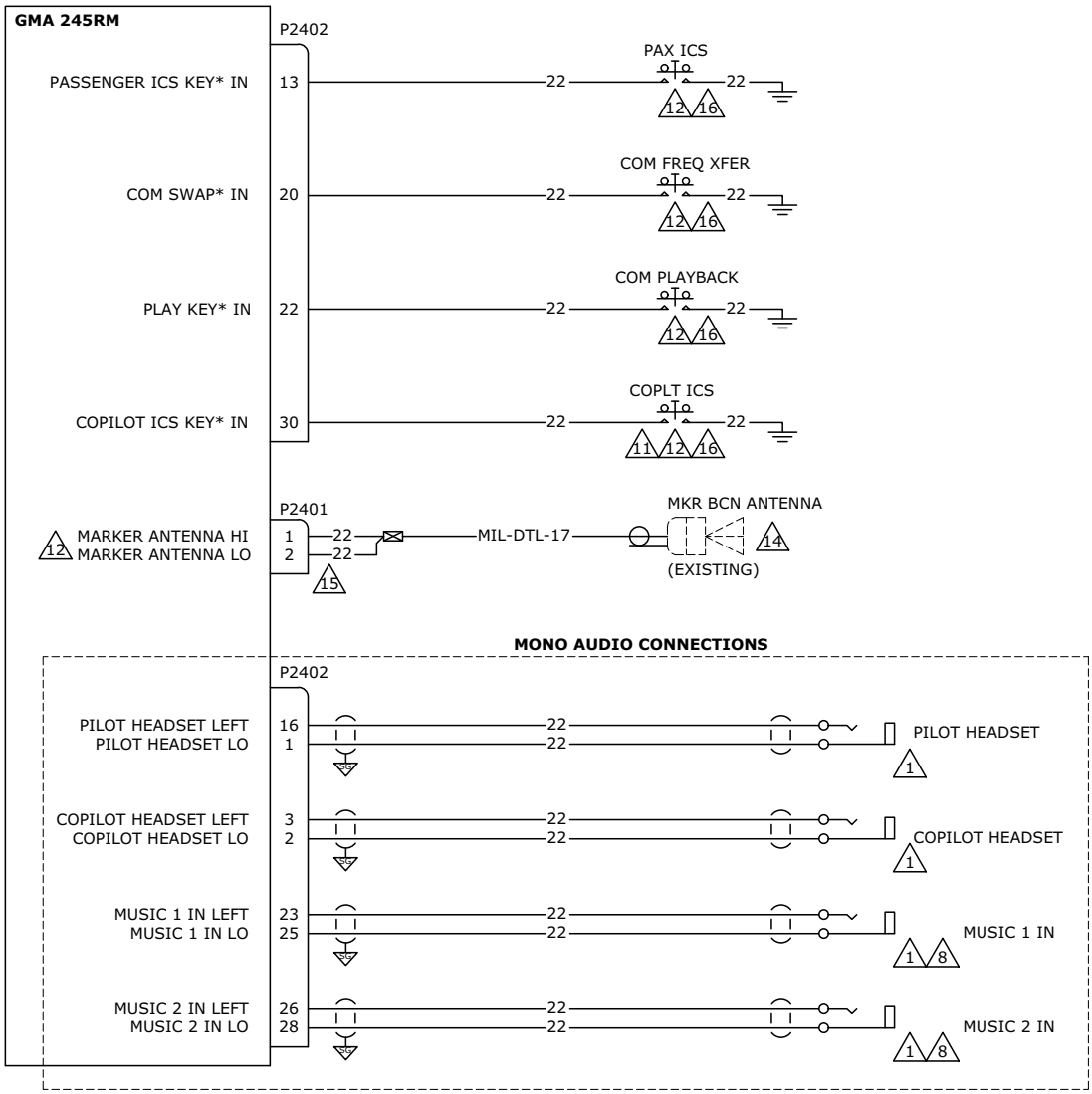

Figure B-8.3 GMA 245RM Interconnect
Sheet 2 of 6

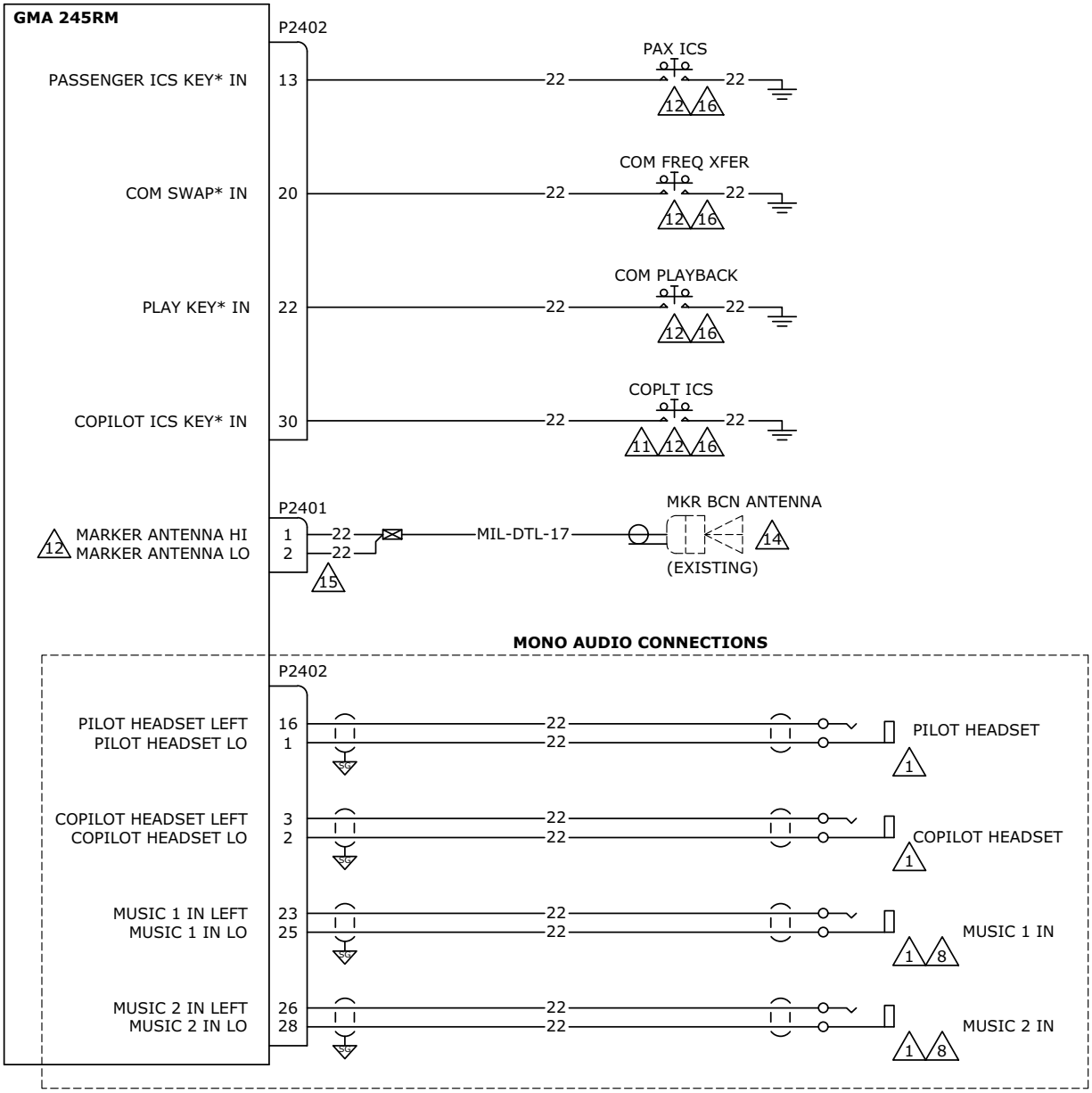

Figure B-8.3 GMA 245RM Interconnect
Sheet 3 of 6

NOTES

1. ISOLATE JACK SLEEVE (MOUNTING NUT AND NUT PLATE) FROM AIRCRAFT CHASSIS. ALL HEADSET, MICROPHONE, AND MUSIC PHONE JACKS MUST BE ELECTRICALLY ISOLATED FROM GROUND. REFER TO THE FIGURE BELOW FOR HOW THE JACK IS ISOLATED. NOT ISOLATING WILL CAUSE GROUND LOOPS AND NOISE.

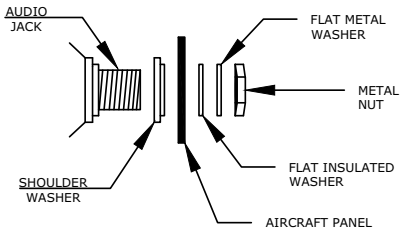

2. IF THE TRANSCEIVER HAS A SEPARATE RETURN FOR AUDIO IN AND AUDIO OUT, CONNECT BOTH TO THE GMA AUDIO LO AT THE GMA.

3. TRANSCEIVER INTERFACES CAN ALSO BE WIRED THROUGH SUITABLE JACKS AND CABLES TO HANDHELD COMS THAT HAVE HEADSET INTERFACE CAPABILITY. THE HANDHELD'S HEADSET OUTPUT (LEFT CHANNEL ONLY IF STEREO) CONNECTS TO THE GMA'S COM AUDIO IN HI AND COM AUDIO LO PINS, THE HANDHELD'S MIC INPUT CONNECTS TO GMA'S COM MIC AUDIO OUT HI AND COM AUDIO LO PINS, AND THE HANDHELD'S PTT KEY CONNECTS TO GMA'S COM MIC KEY* OUT. REFER TO THE TRANSCEIVER'S INSTRUCTION MANUAL.

4. THE TELEPHONE INTERFACE MAY BE WIRED TO A FIXED MOUNTED TELEPHONE SOURCE (SHOWN) OR TO A SUITABLE JACK FOR PORTABLE TELEPHONE.

5. THE CONNECTION BETWEEN PTT AND THE MIC JACK TIP IS REQUIRED IF HAND MICS WILL BE USED.

6. ALTERNATIVELY, BASED UPON AIRCRAFT INSTALLATION, PTT INPUT CAN BE CONNECTED AS FOLLOWS:

SEE GMA 245RM INTERCONNECT DIAGRAM

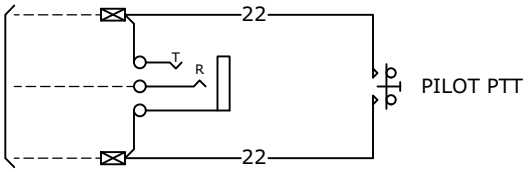

7. THIS ACTIVE LOW OUTPUT DISCRETE CAN BE CONNECTED TO OTHER INSTALLED LRUS AS NECESSARY.

8. THE MUSIC LO SIGNALS ARE NOT THE SAME REFERENCE AS OTHER GROUNDS. THE MUSIC LO SIGNALS ARE PART OF A DIFFERENTIAL PAIR WITH THE RIGHT AND LEFT SIGNALS. IF THE MUSIC LO SIGNAL IS TIED TO A GROUND, THE MUSIC WILL CONTAIN NOISE, AND THE AUDIO QUALITY WILL BE DEGRADED.

9. DO NOT CONNECT THE SPEAKER GROUND RETURN TO THE AIRCRAFT CHASSIS. THE GROUND RETURN MUST GO TO THE GMA.

Figure B-8.3 GMA 245RM Interconnect
Sheet 4 of 6

NOTES CONTINUED

10

USE A MINIMUM 10 WATT SPEAKER.

USE 8 OHM SPEAKER FOR 28 VOLT SYSTEMS ONLY.

USE 4 OHM SPEAKER FOR 14 OR 28 VOLT SYSTEMS.

11

ICS KEY INPUTS ARE ALSO COMPATIBLE WITH TWO-STAGE PTT KEYS IN WHICH THE FIRST DETENT ACTIVATES THE ICS KEY AND THE SECOND DETENT ACTIVATES THE TRANSCEIVER PTT (CREW ONLY) FOR THAT POSITION.

12

THIS IS AN OPTIONAL CONNECTION FOR THE GMA.

13

PASSENGER HEADSET AUDIO CAN BE SPLICED UP TO 4 TIMES.

14

SEE APPENDIX C FOR MKR BCN ANTENNA REQUIREMENTS.

15

REFER TO SECTION 4.2 FOR PREPARATION OF THE MARKER BEACON CONNECTION TO THE GMA.

16

ACCEPTABLE MOMENTARY-ON SWITCHES INCLUDE:

- GRAYHILL P/N 30-3 PUSH-BUTTON
- GARMIN P/N 340-00258-00 OR OTHER MIL PRF-M8805/110-5112 PUSH-BUTTON
- TOGGLE SWITCH QUALIFIED TO MIL SPEC, FOR EXAMPLE C&K P/N M83731/9-261 OR -341 (SPDT, MOM ON, MIL-DTL-83731 F)

SWITCHES MUST BE LABELED AS SHOWN DIRECTLY ADJACENT TO THE SWITCH.

Figure B-8.3 GMA 245RM Interconnect
Sheet 5 of 6

NOTES CONT'D

FAILSAFE AUDIO IS ONLY HEARD WHILE THE GMA IS NOT POWERED. IF MORE THAN ONE AUDIO SOURCE IS REQUIRED TO BE CONNECTED TO THE FAILSAFE INPUT, MIX AUDIO FROM THE AUDIO SOURCES USING MIXING RESISTORS. MIXING RESISTORS ARE TYPICALLY 390 OHM (±5%), 0.25W. RE-EVALUATE THE AUDIO LEVELS AFTER MIXING RESISTORS ARE INSTALLED.

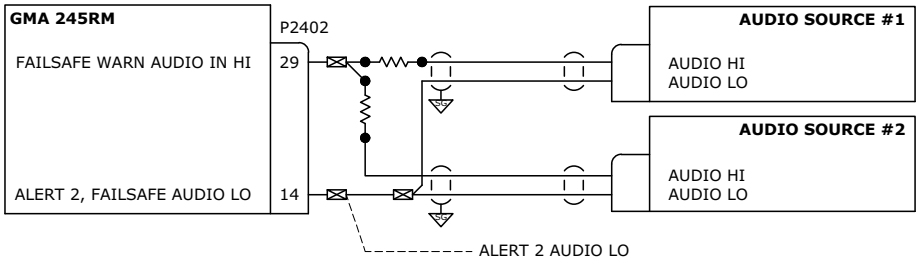

SUMMING RESISTOR BUILDUP

17

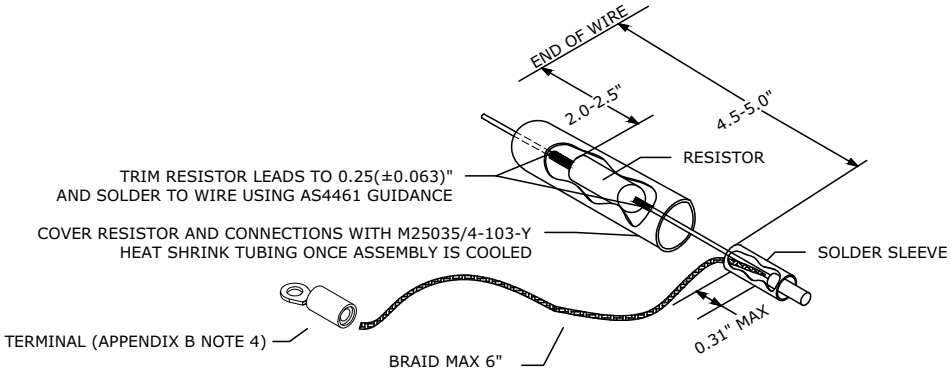

SUMMING RESISTOR BUILDUP NOTES:

1. FOR THE SUMMING RESISTOR (GMA 245R), USE A 390 OHM (±5%), 0.25W RESISTOR, RATED TO MAINTAIN RESISTANCE AND POWER RATING AT 70°C, AND BE QUALIFIED TO MIL-R-10509 OR MIL-PRF-22684.
2. THE "-Y" CHARACTER IN THE HEAT SHRINK P/N IS COLOR OF THE HEAT SHRINK, COLOR OF HEAT SHRINK IS THE INSTALLER'S CHOICE.
3. ACCEPTABLE SOLDER TYPES ARE SN60 OR SN63. CLEAN FLUX RESIDUES USING AN APPROPRIATE FLUX CLEANER.

Figure B-8.3 GMA 245RM Interconnect
Sheet 6 of 6

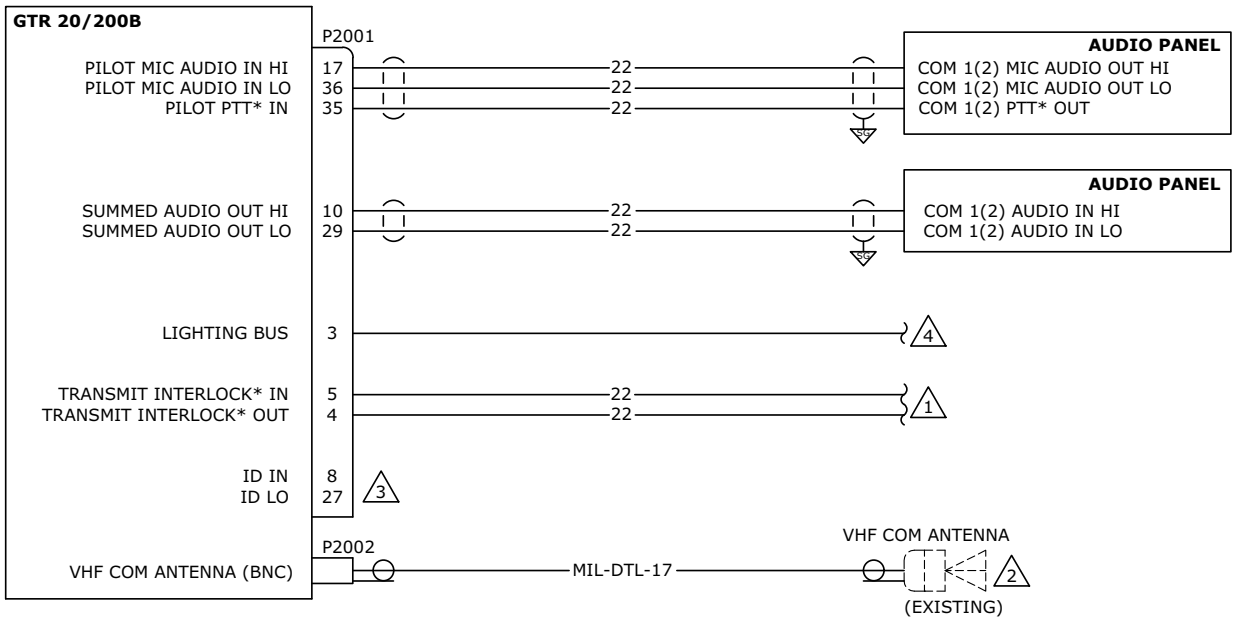

NOTES

1. THE INTERLOCK SIGNALS CAN BE CONNECTED TO SYSTEMS THAT REQUIRE AN ACTIVE LOW SIGNAL FOR COM TRANSMIT INTERLOCK FUNCTIONS. IF THE GTR 20/200B IS INSTALLED WITH A GDU 116C/NC, CONNECT INTERLOCK PINS TO GDU INTERLOCK PINS. INTERLOCK IN TO INTERLOCK OUT AND INTERLOCK OUT TO INTERLOCK IN.

2. REFER TO SECTION C.13 FOR COM ANTENNA REQUIREMENTS.

3. IF THE GTR 20/200B IS INSTALLED AS COM 2, CONNECT PINS P2001 PIN 8 AND 27. JUMPER MUST BE LESS THAN 4 INCHES LONG.

4. THIS CONNECTION IS ONLY APPLICABLE TO GTR 200B. AS BEST AS POSSIBLE, MATCH EXISTING LIGHTING WIRING GAUGE SIZE WHEN CONNECTING TO LIGHTING CONTROL MECHANISM (i.e., RHEOSTAT, POTENTIOMETER).

Figure B-8.4 GTR 20/200B VHF COM Interconnect

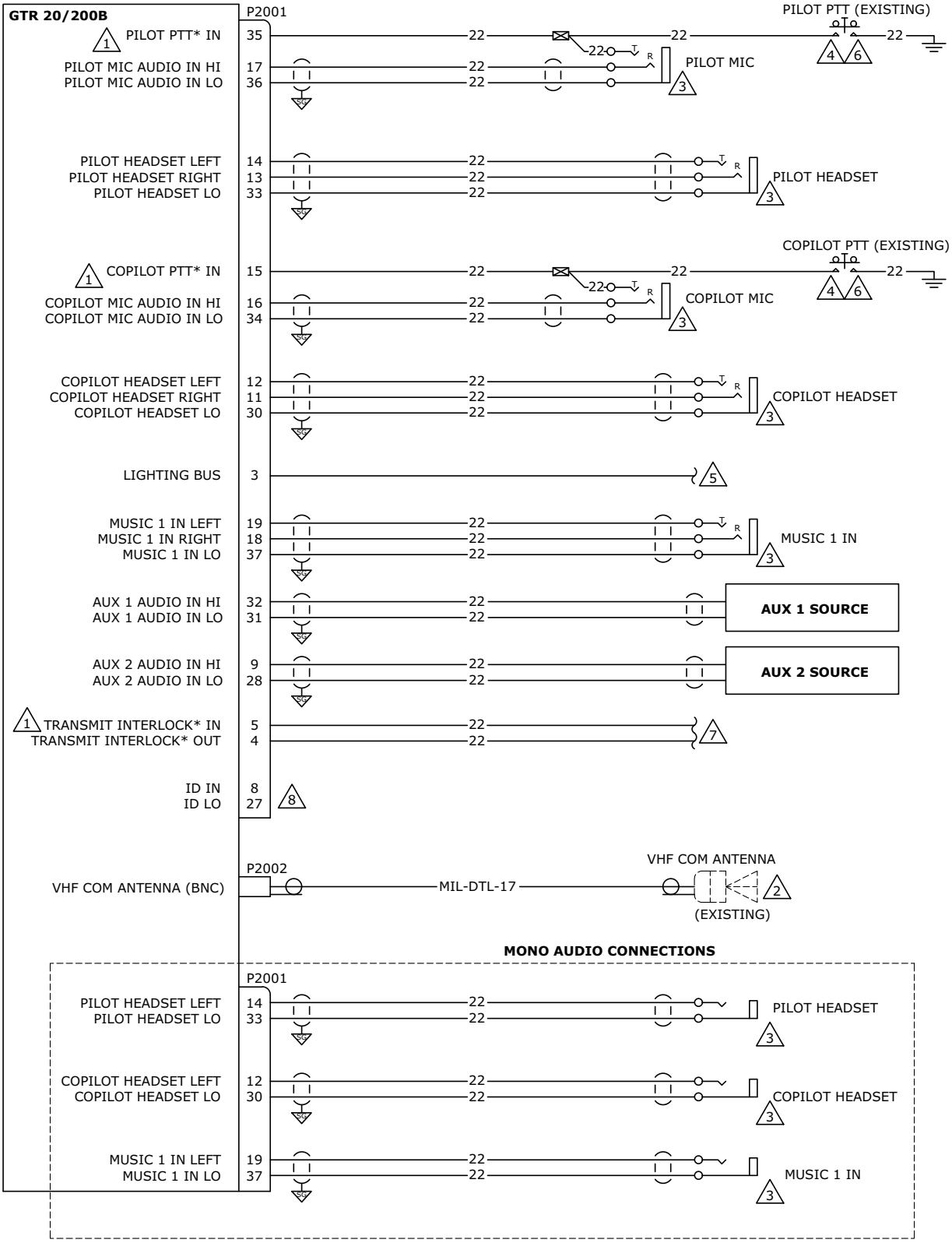

Figure B-8.5 GTR 20/200B VHF COM with Intercom Interconnect Sheet 1 of 2

NOTES

1. REFER TO SECTION C.13 FOR COM ANTENNA REQUIREMENTS.

2. ISOLATE JACK SLEEVE (MOUNTING NUT AND NUT PLATE) FROM AIRCRAFT CHASSIS. ALL HEADSET, MICROPHONE, AND MUSIC PHONE JACKS MUST BE ELECTRICALLY ISOLATED FROM GROUND. REFER TO THE FIGURE BELOW FOR HOW THE JACK IS ISOLATED. NOT ISOLATING WILL CAUSE GROUND LOOPS AND NOISE.

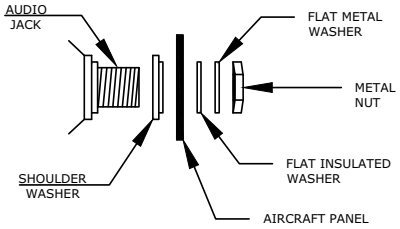

ALTERNATIVELY, BASED UPON AIRCRAFT INSTALLATION, PTT INPUT CAN BE CONNECTED AS FOLLOWS:

3. ERNATIVELY, BASED UPON AIRCRAFT INSTALLATION, PTT INPUT CAN BE CONNECTED AS FOLLOWS:

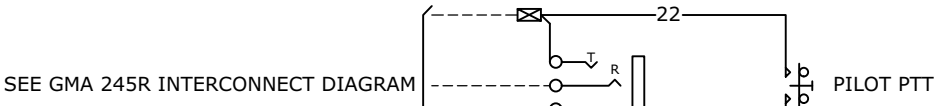

4. THIS CONNECTION ONLY APPLICABLE TO GTR 200B. AS BEST AS POSSIBLE, MATCH EXISTING LIGHTING WIRING GAUGE SIZE WHEN CONNECTING TO LIGHTING CONTROL MECHANISM (i.e., RHEOSTAT, POTENTIOMETER).

5. THE CONNECTION BETWEEN PTT AND THE MIC JACK TIP IS REQUIRED IF HAND MICS WILL BE USED.

6. THE INTERLOCK SIGNALS CAN BE CONNECTED TO SYSTEMS THAT REQUIRE AN ACTIVE LOW SIGNAL FOR COM TRANSMIT INTERLOCK FUNCTIONS. IF THE GTR IS INSTALLED WITH A GDU 116C/NC, CONNECT INTERLOCK PINS TO GDU INTERLOCK PINS. INTERLOCK IN TO INTERLOCK OUT AND INTERLOCK OUT TO INTERLOCK IN.

7. IF THE GTR 20/200B IS INSTALLED AS COM 2, CONNECT PINS P2001 PIN 8 AND 27. JUMPER MUST BE LESS THAN 4 INCHES LONG.

Figure B-8.5 GTR 20/200B VHF COM with Intercom Interconnect
Sheet 2 of 2

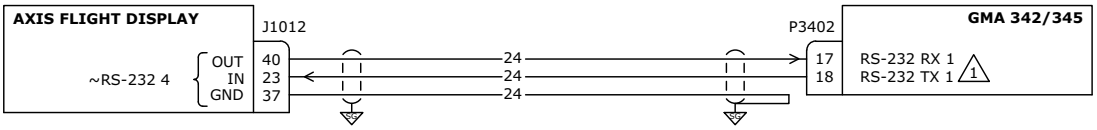

NOTES

1 THIS INTERFACE IS OPTIONAL. THIS INTERFACE ENABLES SELECTED COM FROM THE GMA 342/345 TO BE DISPLAYED ON THE GDU. REFERENCE GMA 342/345 INSTALLATION MANUAL FOR FURTHER INFORMATION.

Figure B-8.6 GMA 342/345 Interconnect

B.9 Sensor Wiring Examples

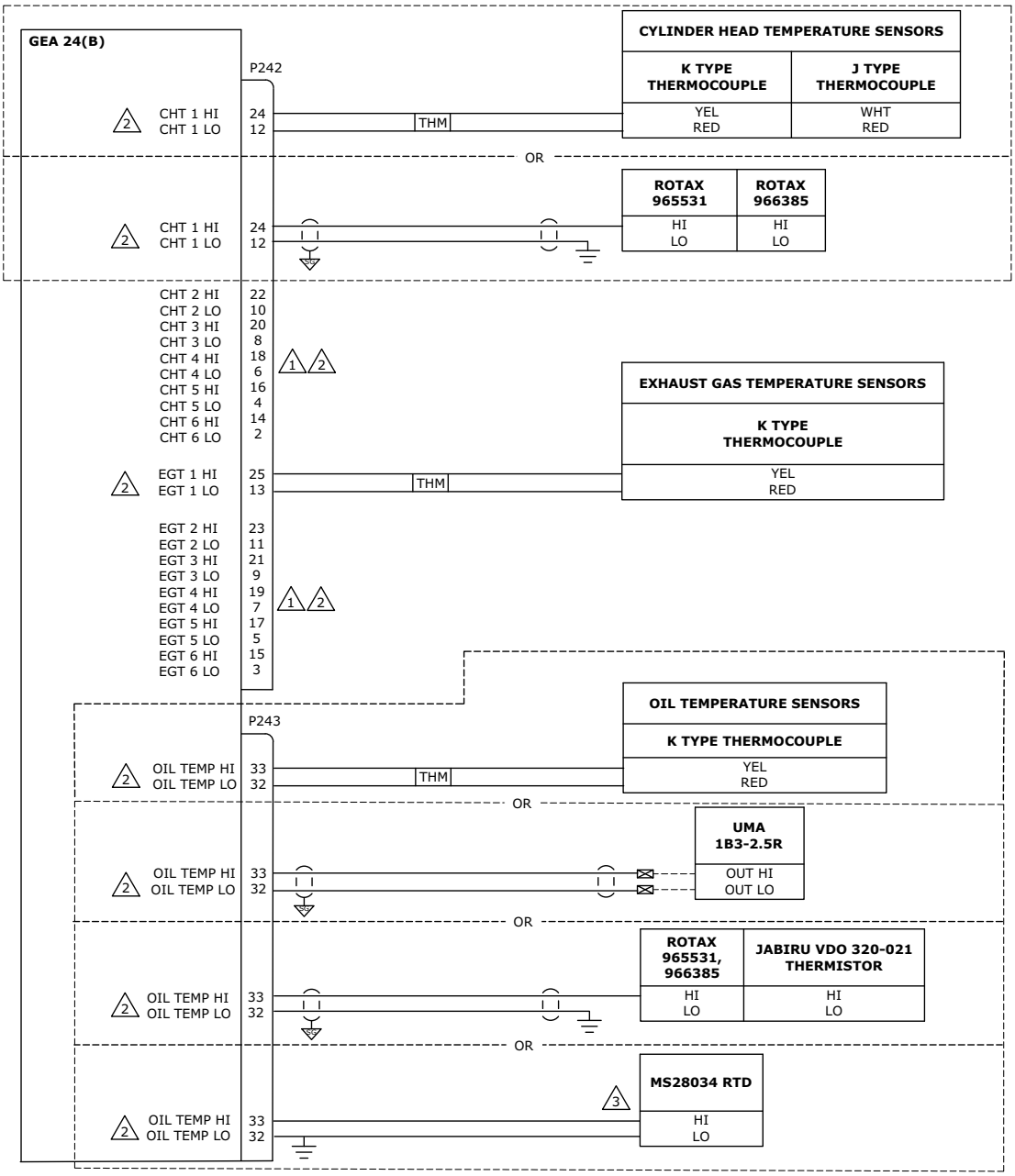

NOTES

1. USE THESE INPUTS AS NECESSARY GIVEN ENGINE CONFIGURATION. USE IDENTICAL WIRING FOR ADDITIONAL INPUTS.

2. USING A GEA 24B, ADDITIONAL TEMPERATURE MEASUREMENT CAN BE ACCOMPLISHED USING TEMP PORTS 1-6. TEMP 3-4 ARE UNAVAILABLE IF CHT 5-6 ARE IN USE. TEMP 5-6 ARE UNAVAILABLE IF EGT 5-6 ARE IN USE. TEMP 5-6 IS FOR THERMOCOUPLES ONLY. REFER TO APPENDIX A FOR MORE INFO.

3. USE SOCKET P/N MS39029/30-217 TO INTERFACE WITH RTD P/N MS28034.

Figure B-9.1 GEA 24(B) Temperature Sensors

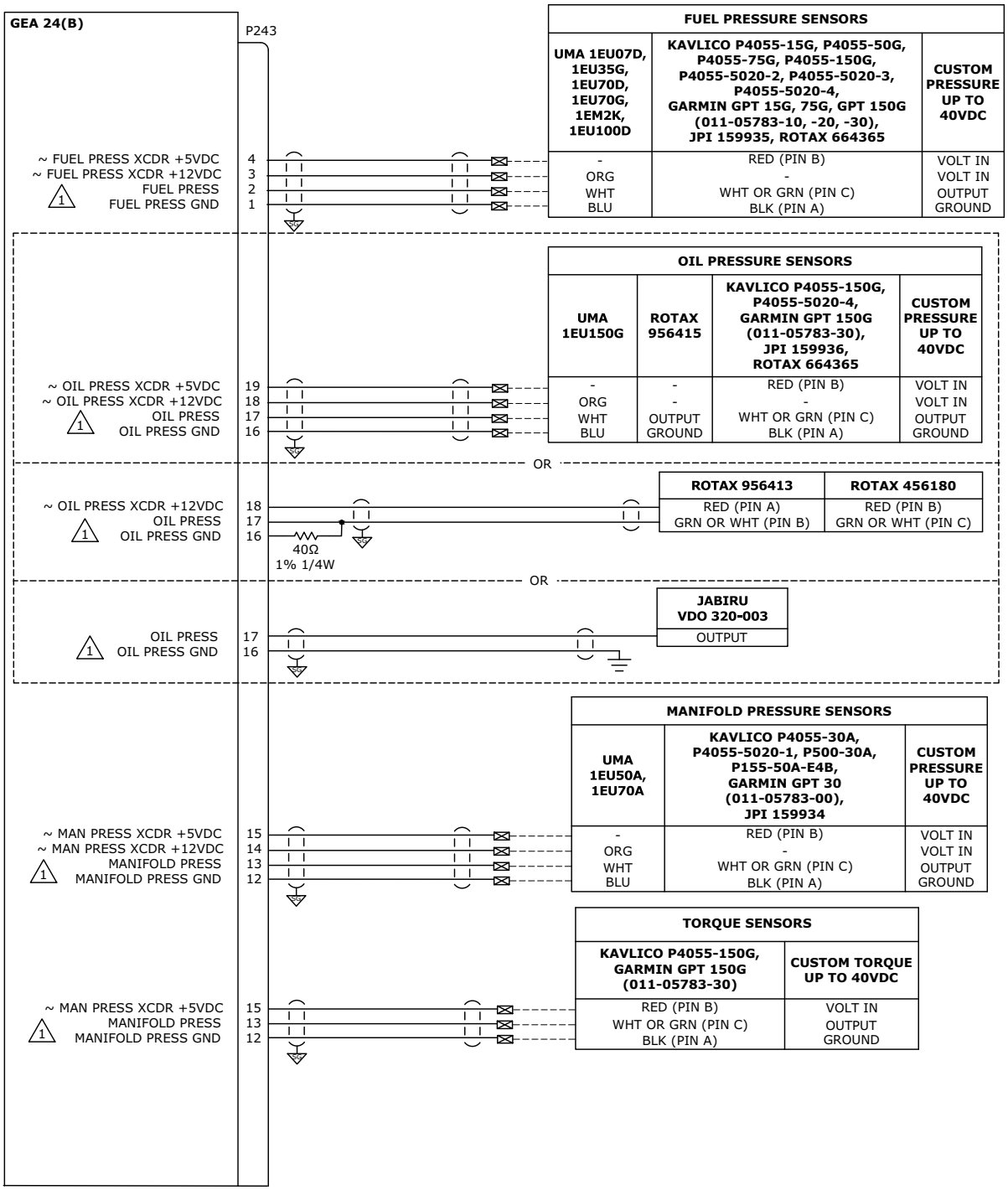

NOTES

1 ADDITIONAL PRESSURE TRANSDUCER MEASUREMENT CAN BE ACCOMPLISHED USING GENERAL PURPOSE PORTS 1-7. REFER TO SECTION B-9.6 FOR MORE INFORMATION AND WIRING.

Figure B-9.2 GEA 24(B) Pressure Sensors

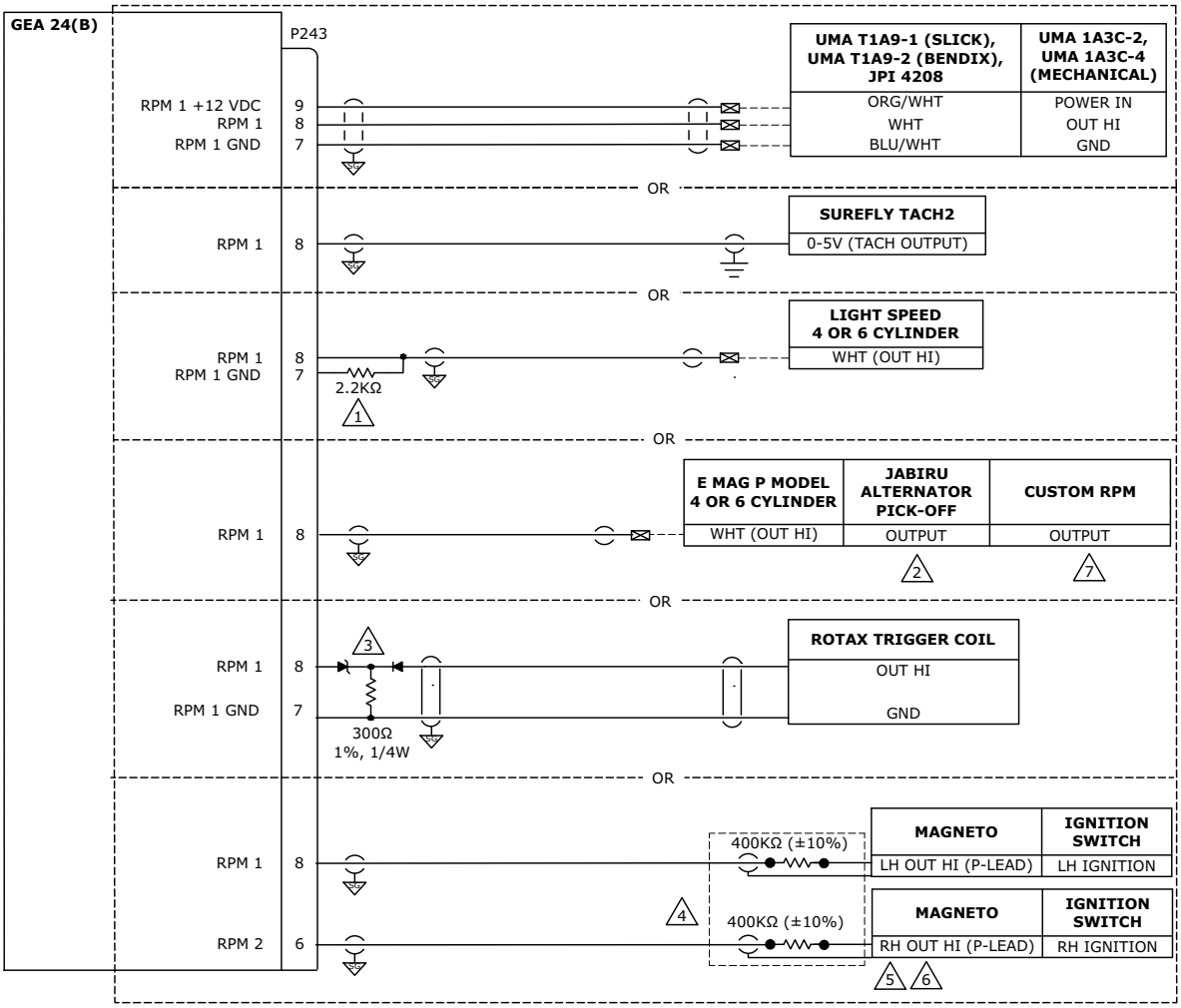

NOTES

1. LIGHT SPEED ENGINEERING PLASMA III “B” AND “C” MODELS REQUIRE A 2.2KΩ PULL DOWN RESISTOR FOR PROPER OPERATION. PLASMA III “A” MODELS AND PLASMA II MODELS DO NOT REQUIRE A PULL DOWN RESISTOR. PLASMA III “B” AND “C” MODELS MODIFIED FOR OPEN COLLECTOR TACH OUTPUT ALSO DO NOT REQUIRE A PULL DOWN RESISTOR.

2. RPM SIGNAL FOR JABIRU 3300 IS TYPICALLY OBTAINED BY TYING INTO ONE OF THE TWO WIRES RUNNING BETWEEN THE ALTERNATOR AND THE ALTERNATOR REGULATOR. ONE OF THE TWO WHITE WIRES ON THE ALTERNATOR SIDE OF ONE OF THE TWO PALE BLUE WIRES ON THE REGULATOR SIDE CAN BE USED FOR THE SIGNAL.

3. FOR ROTAX RPM 1, USE GARMIN P/N 682-00012-00 ZENER DIODE, P/N 680-00006-D0 DIODE, AND P/N 902-A300R-F0 300Ω 1% 1/2W RESISTOR AS SHOWN. THESE THREE PARTS ARE INCLUDED IN KIT P/N 011-02348-00.

4. REFER TO P-LEAD RESISTOR INSTALLATION, FIGURE B-9.17, FOR DETAILED INSTALLATION OF RESISTOR.

5. FOR MAGNETO, CONNECT WIRE SHIELD TO THE GROUND STUD ON THE MAGNETO. FOR IGNITION SWITCH, CONNECT WIRE SHIELD TO AIRFRAME GROUND.

Figure B-9.3 GEA 24(B) RPM Sensors
Sheet 1 of 2

NOTES CONT'D

6 GEA 24B OR GEA 24 MOD 2 MUST BE USED FOR P-LEAD RPM SENSING. MOD LEVEL STATUS CAN BE DETERMINED BY CHECKING THE SERIAL TAG ON THE UNIT.

7 CUSTOM RPM ALLOWABLE RANGES ARE AS FOLLOWS: 0-10, 0-15, 0-500, AND 0-1000HZ.

Figure B-9.3 GEA 24(B) RPM Sensors
Sheet 2 of 2

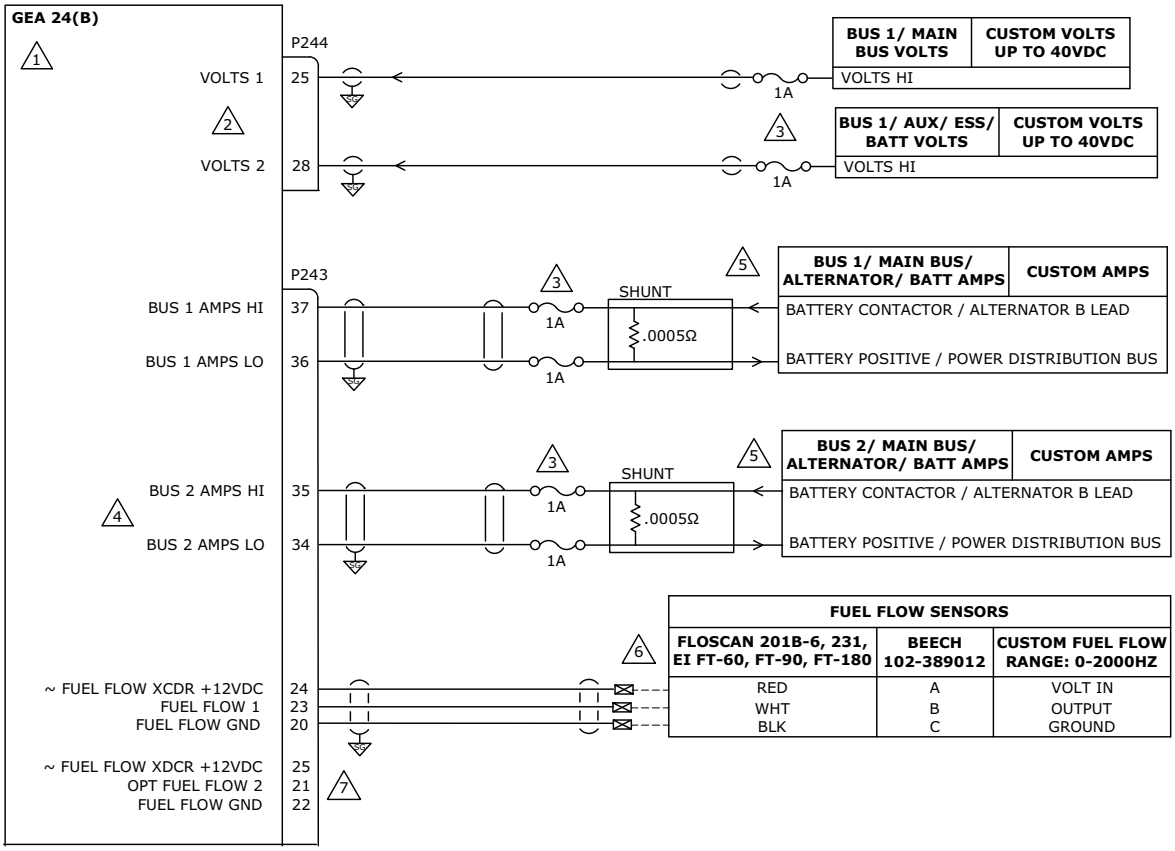

NOTES

1. ADDITIONAL VOLTAGE/CURRENT MEASUREMENT CAN BE ACCOMPLISHED USING GENERAL PURPOSE PORTS 1-7. REFER TO FIGURE B-9.7 FOR MORE INFORMATION AND WIRING.

2. CONNECTIONS ARE OPTIONAL, BUS VOLTAGE CAN BE MONITORED FROM THE GEA 24(B) POWER SUPPLY INPUTS. SEE SECTION X FOR CONFIGURATION INFO.

3. FUSES MUST BE SAME TYPE AND RATING.

4. SHUNT 2 HAS TWO INPUTS THAT MAY BE USED (J243, PIN 34 AND 35, OR J244, PIN 46 AND 47). USE THE INPUTS FROM ONE CONNECTOR ONLY. REFER TO APPENDIX A FOR MORE INFORMATION.

5. IF MEASURING BATTERY CURRENT, PLACE SHUNT BETWEEN BATTERY POS TERMINAL AND THE BATTERY CONTACTOR. IF MEASURING ALTERNATOR CURRENT, PLACE SHUNT BETWEEN ALTERNATOR B LEAD AND POWER DISTRIBUTION BUS.

6. USE PIN P/N M39029/26-212 TO CONNECT WIRING TO EXISTING CONNECTOR ON BEECH 102-389012 SENSOR.

7. THE FUEL FLOW 2 CHANNEL CAN OPTIONALLY BE CONFIGURED TO MEASURE EI P-300C FUEL QUANTITY, OR CONFIGURED TO MEASURE RETURN FUEL FLOW. IF A FUEL FLOW TRANSDUCER IS WIRED TO THIS INPUT, THE MEASURE FUEL FLOW WILL BE SUBTRACTED FROM THE MEASURE FUEL FLOW 1 INPUT AS PART OF A DIFFERENTIAL FUEL FLOW CALCULATION.

Figure B-9.4 GEA 24(B) Current, Voltage, and Flow Sensors

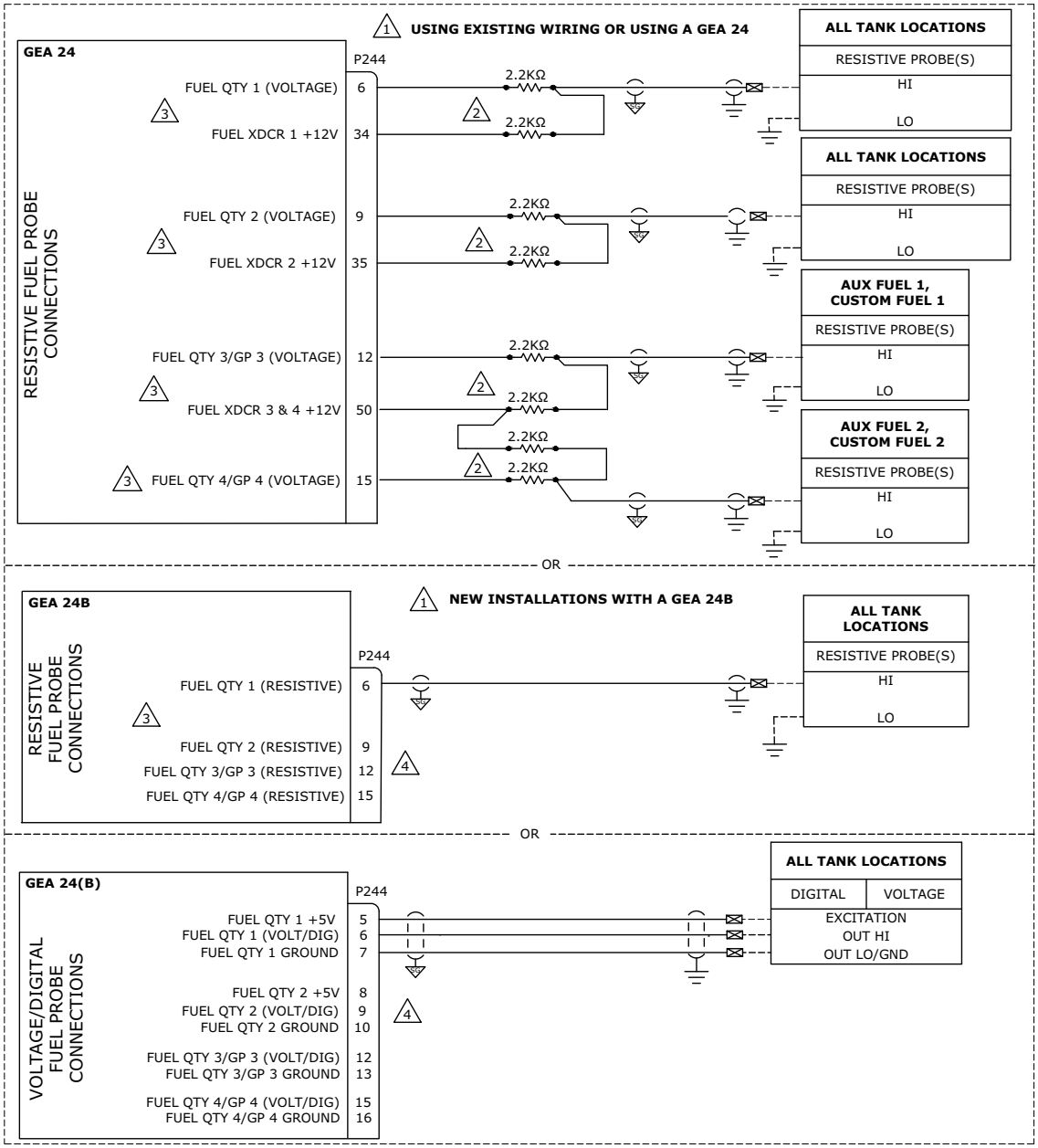

NOTES

1. FOR COMPOSITE OR TUBE AND FABRIC AIRCRAFT INSTALLATIONS WITH A GEA 24 (P/N 010-01042-00) THAT ARE USING FQ SENSORS ASSIGNED TO A RESISTIVE INPUT, TWO 2.2KΩ RESISTORS IN SERIES MUST BE INSTALLED. FOR METAL AIRCRAFT, RESISTORS ARE OPTIONAL. IT IS NOT RECOMMENDED TO INSTALL RESISTORS FOR GEA 24B INSTALLATIONS (P/N 010-02770-00), ALTHOUGH IT IS ACCEPTABLE IF ALREADY PRESENT.

2. RESISTORS MUST BE 2.2KΩ (±1%), MINIMUM POWER OF 0.25W, RATED TO MAINTAIN RESISTANCE POWER RATING AT 70°C, AND BE QUALIFIED TO MIL-R-10509. ALL RESISTORS MUST BE SAME PART NUMBER.

Figure B-9.5 GEA 24(B) Fuel Quantity Wiring
Sheet 1 of 2

NOTES CONT'D

3 WHEN RESISTIVE PROBES ARE INSTALLED WITH INLINE RESISTORS, THE CONFIGURATION SETTING MUST BE SET TO "VOLTAGE" TYPE. WHEN RESISTIVE PROBES ARE NOT INSTALLED WITH RESISTORS, THE CONFIGURATION SETTING MUST BE SET TO "RESISTIVE" TYPE.

4 USE THESE INPUTS AS NECESSARY GIVEN ENGINE CONFIGURATION. USE IDENTICAL WIRING FOR ADDITIONAL INPUTS.

Figure B-9.5 GEA 24(B) Fuel Quantity Wiring
Sheet 2 of 2

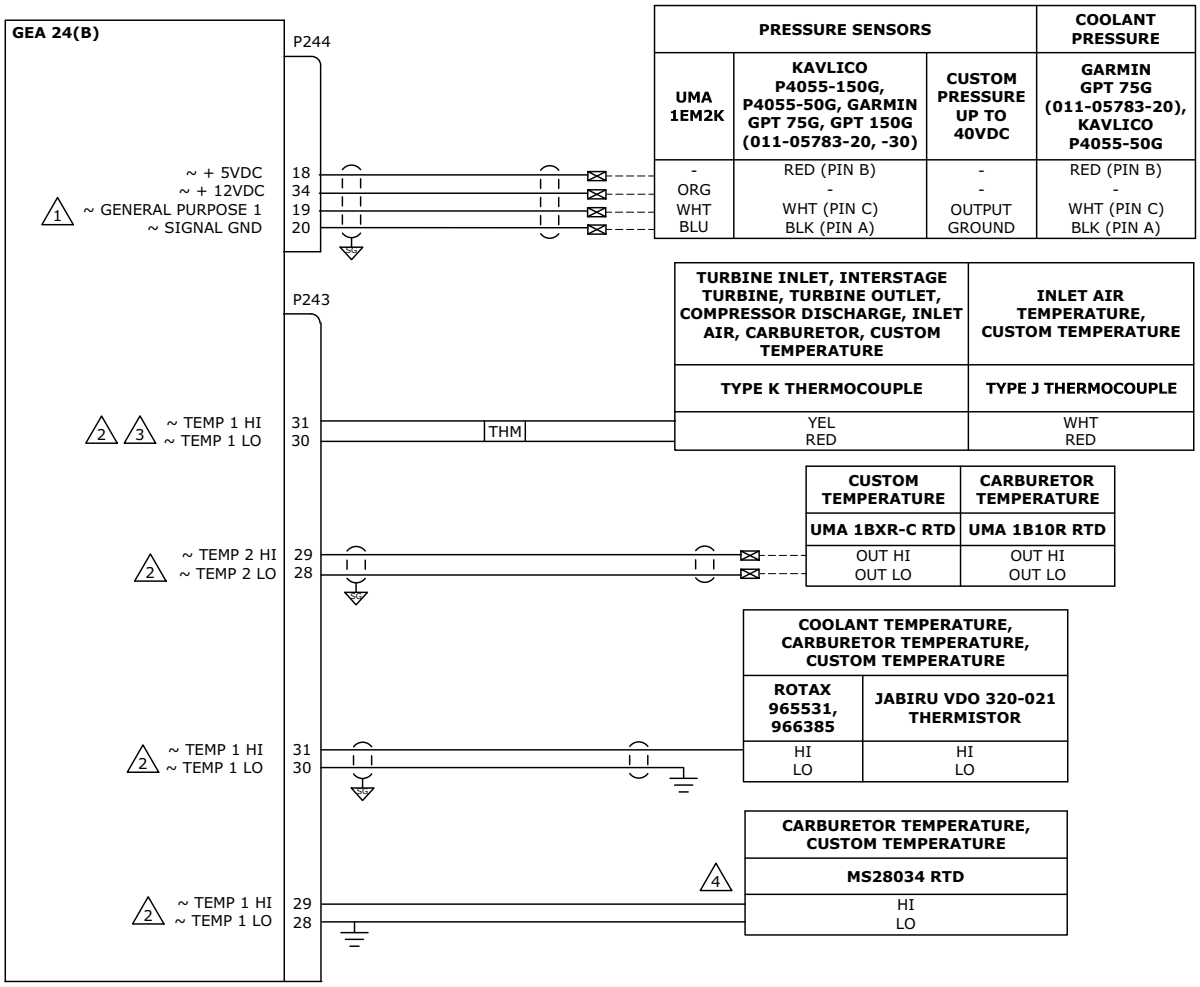

NOTES

1. ANY GENERAL PURPOSE PORT 1 - 7 MAY BE USED. USE IDENTICAL WIRING FOR ADDITIONAL INPUTS.

2. ANY TEMP PORT 1 - 6 MAY BE USED. USE IDENTICAL WIRING FOR ADDITIONAL INPUTS. FOR CARB TEMP, ONLY TYPE K THERMOCOUPLE IS AVAILABLE ON GP PORTS 5 AND 6.

3. IF INSTALLING AN UNGROUNDED THERMOCOUPLE TO AN ANALOG IN INPUT, A DC REFERENCE MUST BE ADDED TO THE LO INPUT. THIS CAN BE ACCOMPLISHED BY ADDING A RESISTANCE OF 1 MΩ OR LESS BETWEEN GROUND AND THE ANALOG IN LO INPUT THAT THE UNGROUNDED THERMOCOUPLE IS INSTALLED ON.

4. USE SOCKET P/N MS39029/30-217 TO INTERFACE WITH RTD P/N MS28034.

Figure B-9.6 GEA 24(B) General Purpose Sensors
Sheet 1 of 2

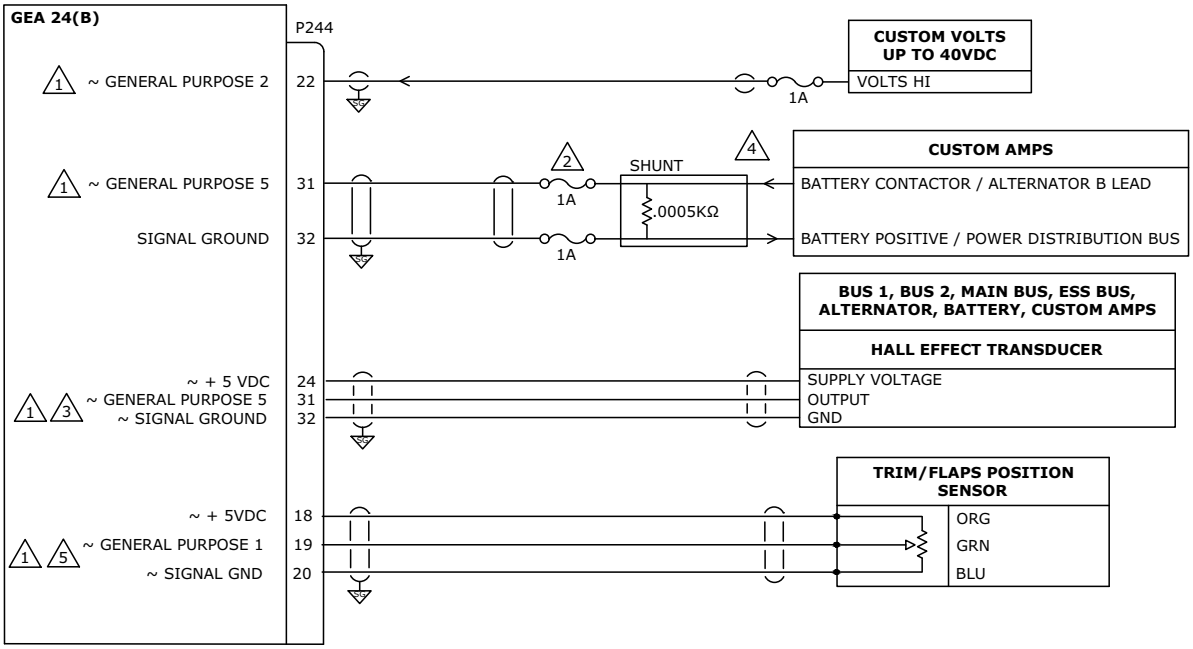

NOTES

1. ANY GENERAL PURPOSE PORT 1 - 7 MAY BE USED. USE IDENTICAL WIRING FOR ADDITIONAL INPUTS.

2. FUSES MUST BE SAME TYPE AND RATING.

3. IF USING GP6 OR GP7 FOR GENERAL PURPOSE VOLTAGE SENSING (HALL EFFECT SENSORS), THE EQUIVALENT GP6 LO OR GP7 LO 7 MUST BE GROUNDED.

4. IF MEASURING BATTERY CURRENT, PLACE SHUNT BETWEEN BATTERY POS TERMINAL AND THE BATTERY CONTACTOR. IF MEASURING ALTERNATOR CURRENT, PLACE SHUNT BETWEEN ALTERNATOR B LEAD AND POWER DISTRIBUTION BUS.

5. WIRING IS APPLICABLE FOR THE FOLLOWING SENSORS: ELEV TRIM POSITION, AILERON TRIM POSITION, RUDDER TRIM POSITION, FLAPS POSITION, POSITION SENSOR.

Figure B-9.6 GEA 24(B) General Purpose Sensors
Sheet 2 of 2

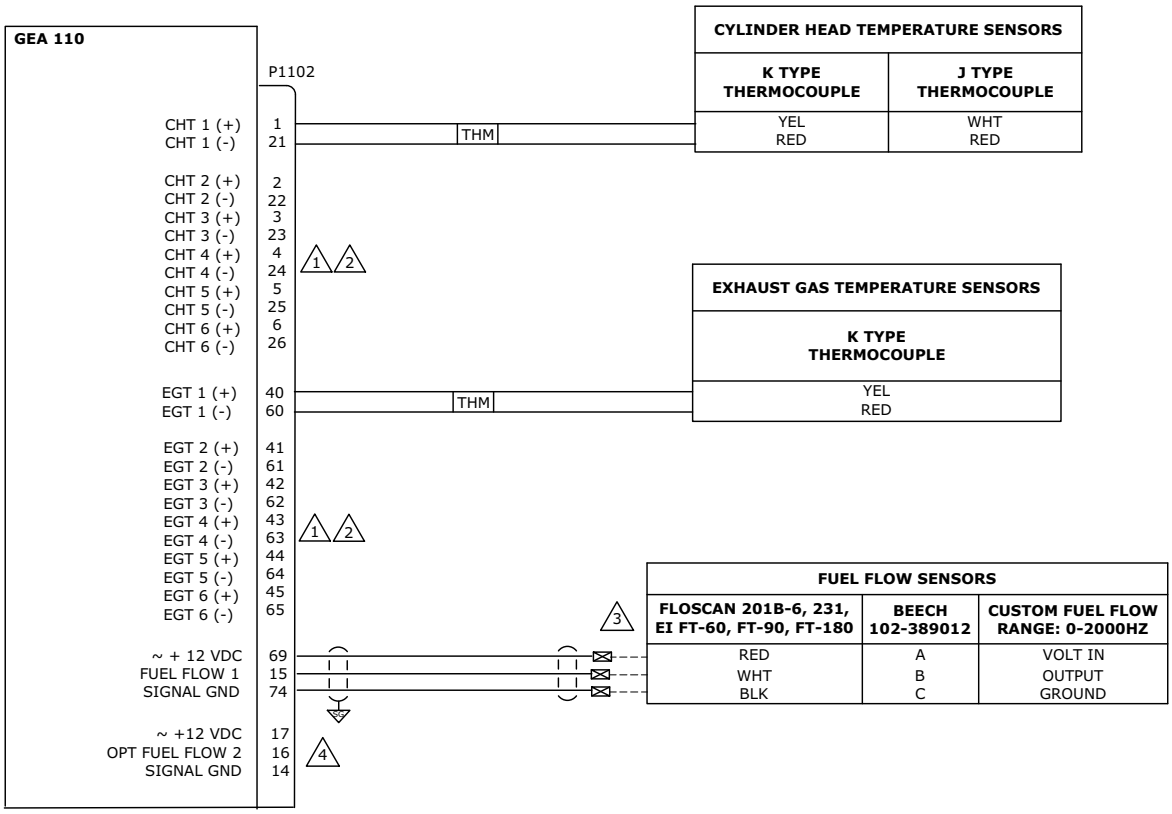

NOTES

1. USE THESE INPUTS AS NECESSARY GIVEN ENGINE CONFIGURATION. USE IDENTICAL WIRING FOR ADDITIONAL INPUTS.

2. ADDITIONAL TEMPERATURE MEASUREMENT CAN BE ACCOMPLISHED USING GENERAL PURPOSE PORTS 1, 2, 5, AND 6. REFER TO FIGURE B-9.13 FOR GENERAL PURPOSE WIRING.

3. USE PIN P/N M39029/26-212 TO CONNECT WIRING TO EXISTING CONNECTOR ON BEECH P/N 102-389012 SENSOR.

4. THE FUEL FLOW 2 CHANNEL CAN OPTIONALLY BE CONFIGURED TO MEASURE EI P-300C FUEL QUANTITY, OR CONFIGURED TO MEASURE RETURN FUEL FLOW. IF A FUEL FLOW TRANSDUCER IS WIRED TO THIS INPUT, THE MEASURE FUEL FLOW WILL BE SUBTRACTED FROM THE MEASURE FUEL FLOW 1 INPUT AS PART OF A DIFFERENTIAL FUEL FLOW CALCULATION.

Figure B-9.7 GEA 110 Temperature and Flow Sensors

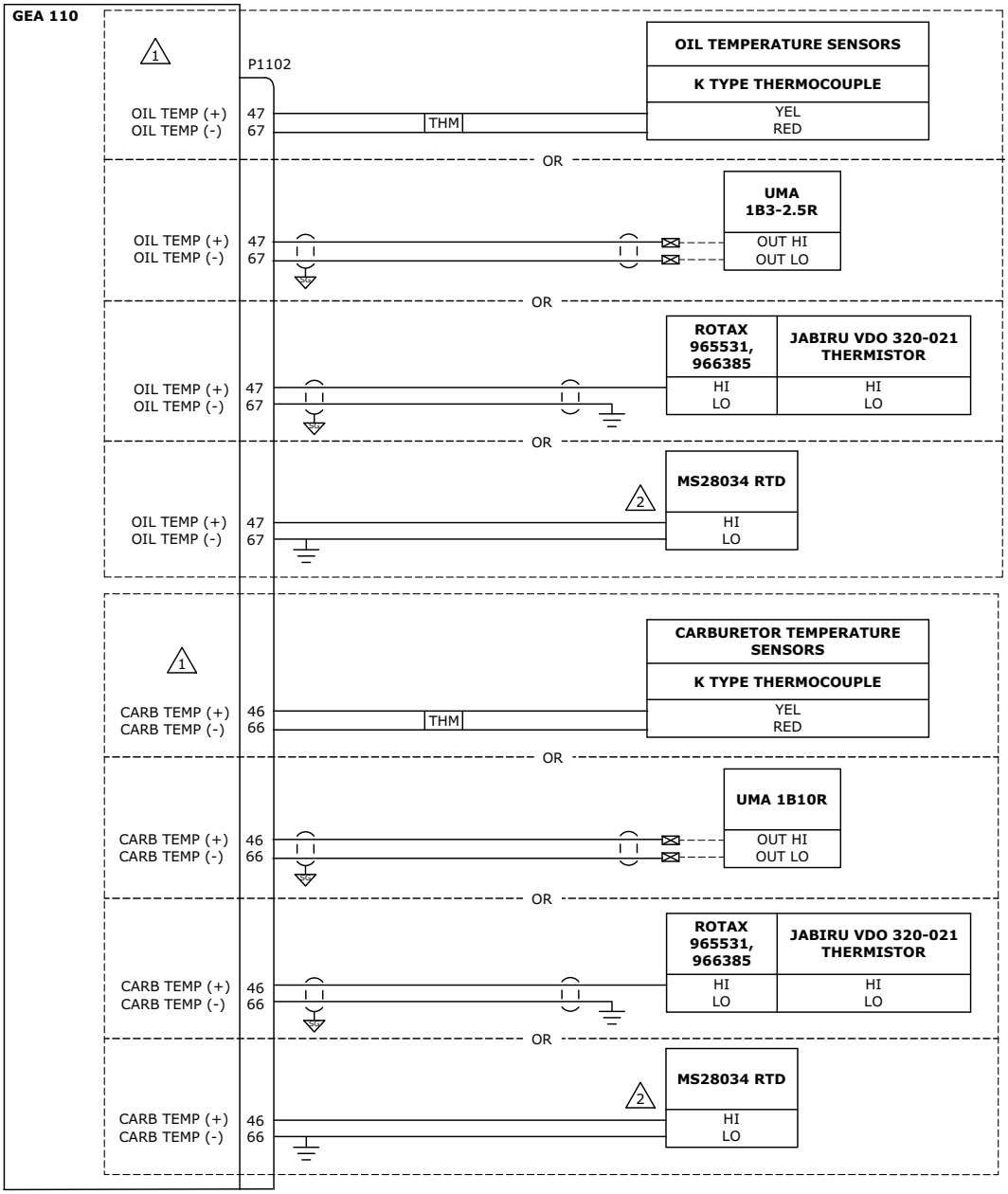

NOTES

1. ADDITIONAL TEMPERATURE MEASUREMENT CAN BE ACCOMPLISHED USING GENERAL PURPOSE PORTS 1, 2, 5, AND 6. REFER TO FIGURE B-9.13 FOR GENERAL PURPOSE WIRING.

2. USE SOCKET P/N MS39029/30-217 TO INTERFACE WITH RTD P/N MS28034.

Figure B-9.8 GEA 110 Temperature Sensors

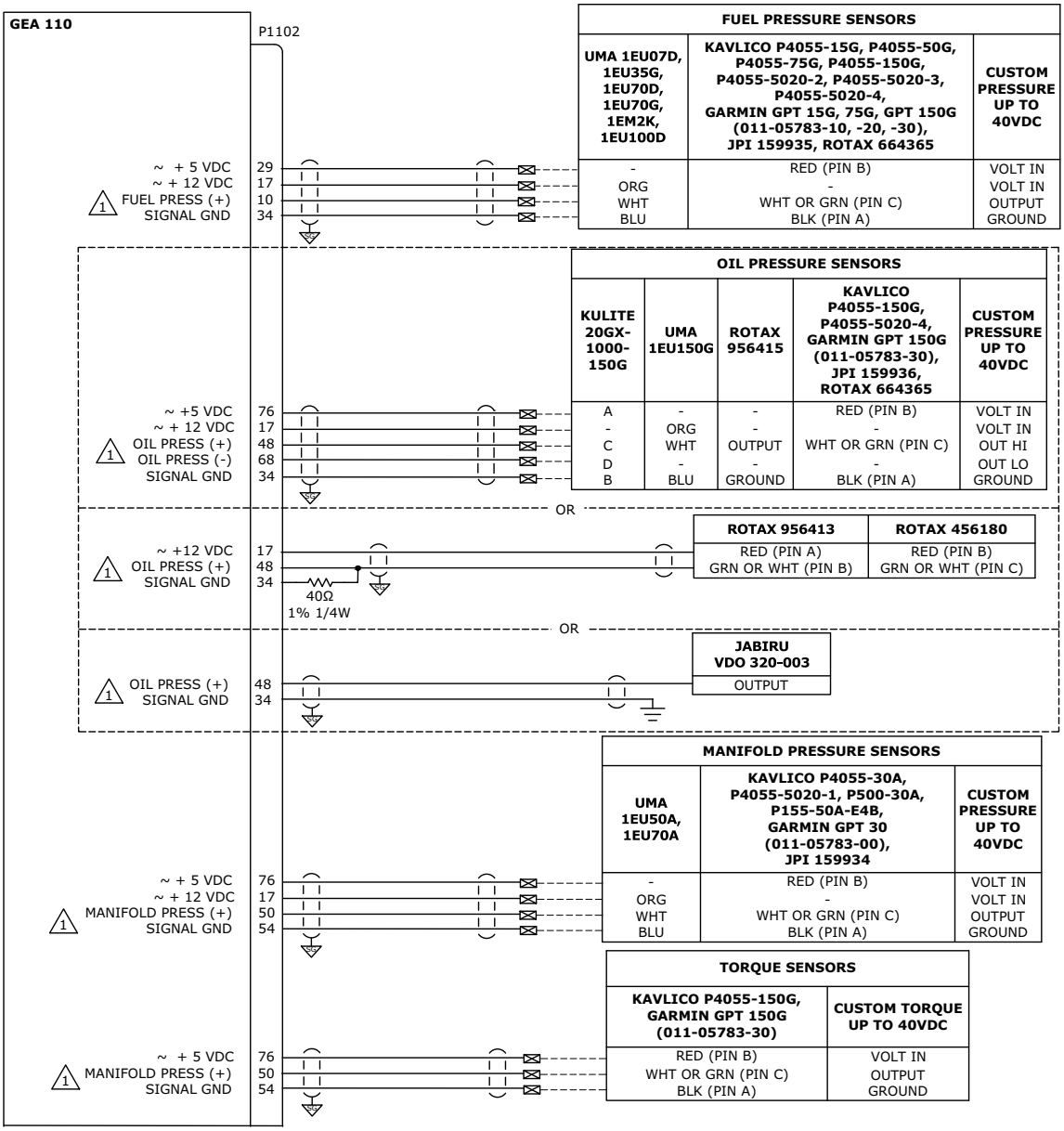

NOTES

1. ADDITIONAL PRESSURE TRANSDUCER MEASUREMENT CAN BE ACCOMPLISHED USING GENERAL PURPOSE PORTS 1-6. REFER TO FIGURE B-9.13 FOR GENERAL PURPOSE WIRING.

2. USE PIN P/N M39029/26-212 TO CONNECT WIRING TO EXISTING CONNECTOR ON BEECH 102-389012 SENSOR.

Figure B-9.9 GEA 110 Pressure Sensors

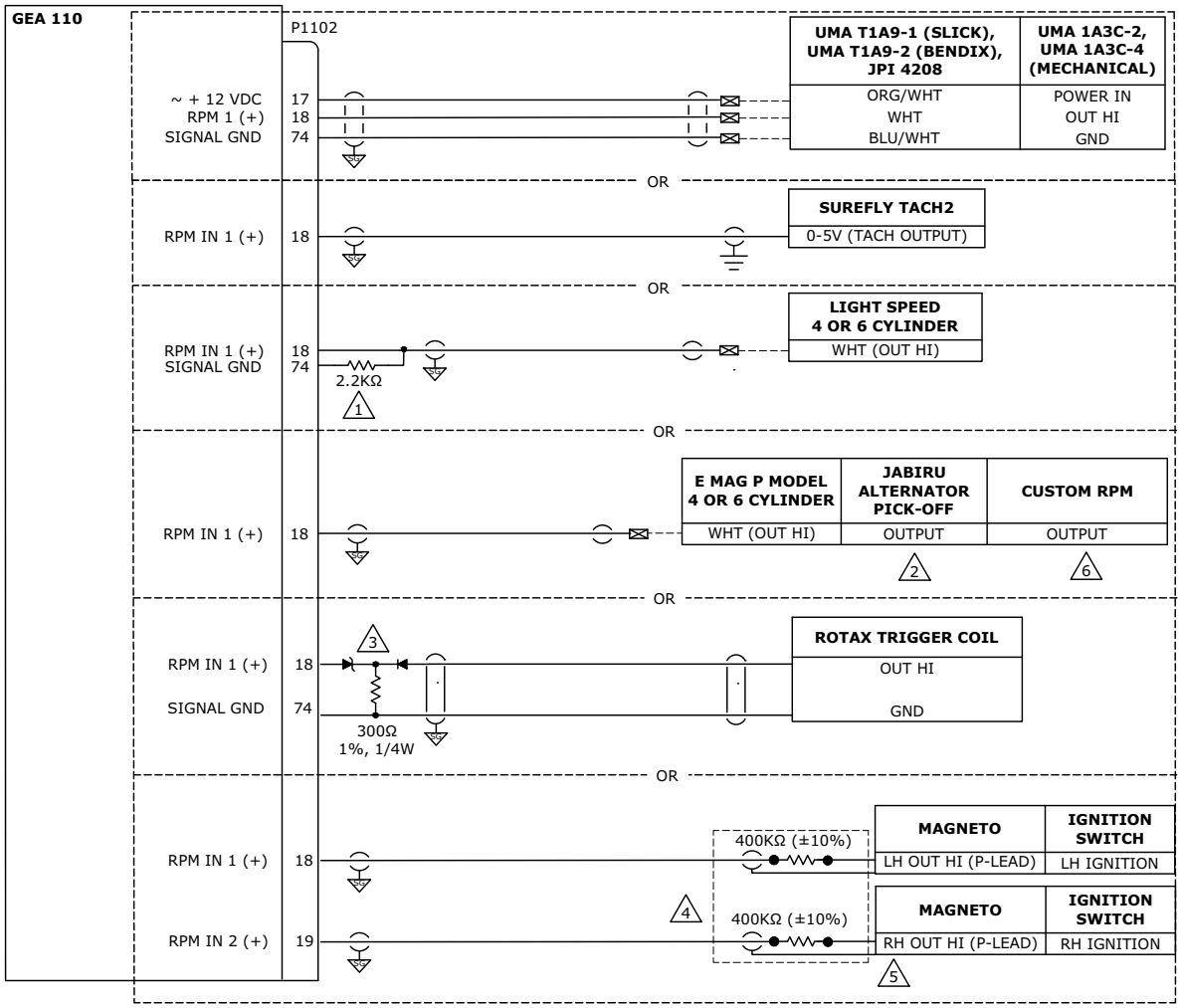

NOTES

1. LIGHT SPEED ENGINEERING PLASMA III “B” AND “C” MODELS REQUIRE A 2.2KΩ PULL DOWN RESISTOR FOR PROPER OPERATION. PLASMA III “A” MODELS AND PLASMA II MODELS DO NOT REQUIRE A PULL DOWN RESISTOR. PLASMA III “B” AND “C” MODELS MODIFIED FOR OPEN COLLECTOR TACH OUTPUT ALSO DO NOT REQUIRE A PULL DOWN RESISTOR.

2. RPM SIGNAL FOR JABIRU 3300 IS TYPICALLY OBTAINED BY TYING INTO ONE OF THE TWO WIRES RUNNING BETWEEN THE ALTERNATOR AND THE ALTERNATOR REGULATOR. ONE OF THE TWO WHITE WIRES ON THE ALTERNATOR SIDE OF ONE OF THE TWO PALE BLUE WIRES ON THE REGULATOR SIDE CAN BE USED FOR THE SIGNAL.

3. FOR ROTAX RPM 1, USE GARMIN P/N 682-00012-00 ZENER DIODE, P/N 680-00006-D0 DIODE, AND P/N 902-A300R-F0 300Ω 1% 1/2W RESISTOR AS SHOWN. THESE THREE PARTS ARE INCLUDED IN KIT P/N 011-02348-00.

4. REFER TO P-LEAD RESISTOR INSTALLATION, FIGURE B-9.17 OR FIGURE B-9.18, FOR DETAILED INSTALLATION OF RESISTOR.

5. FOR MAGNETO, CONNECT WIRE SHIELD TO THE GROUND STUD ON THE MAGNETO. FOR IGNITION SWITCH, CONNECT WIRE SHIELD TO AIRFRAME GROUND.

6. CUSTOM RPM ALLOWABLE RANGES ARE AS FOLLOWS: 0-10, 0-15, 0-500, AND 0-1000HZ.

Figure B-9.10 GEA 110 RPM Sensors

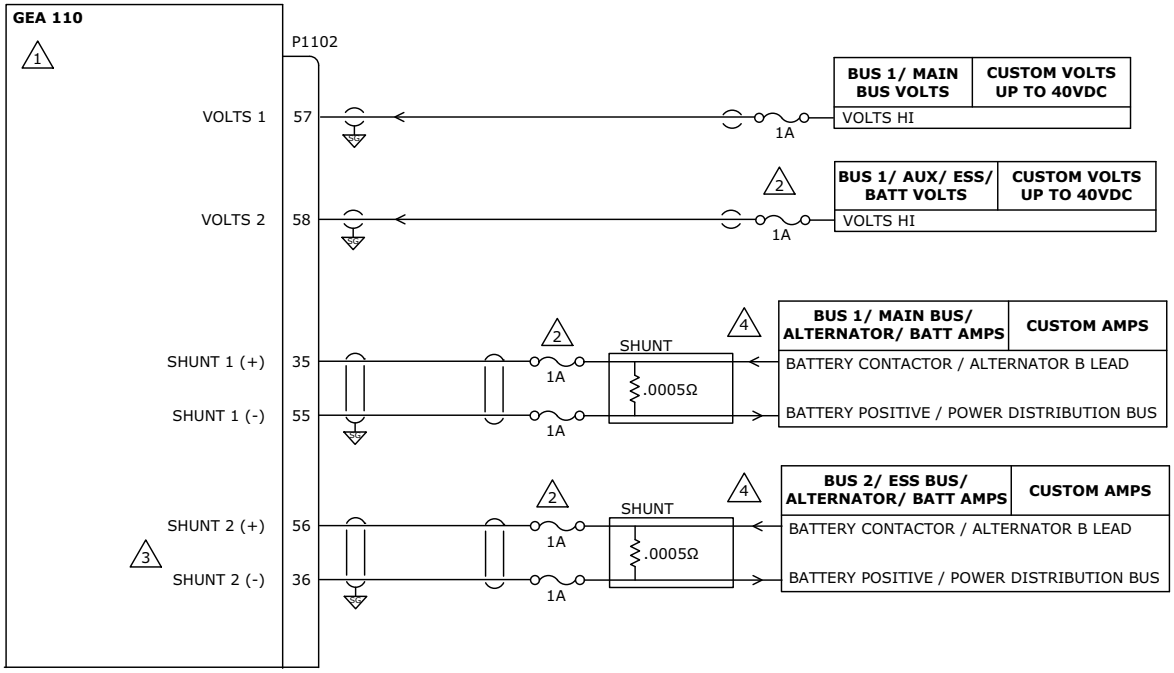

NOTES

1. ADDITIONAL VOLTAGE/CURRENT MEASUREMENT CAN BE ACCOMPLISHED USING GENERAL PURPOSE PORTS 1-6. REFER TO FIGURE B-9.13 FOR GENERAL PURPOSE WIRING.

2. FUSES MUST BE SAME TYPE AND RATING.

3. SHUNT 2 HAS TWO INPUTS THAT MAY BE USED (J243, PIN 34 AND 35, OR J244, PIN 46 AND 47). USE THE INPUTS FROM ONE CONNECTOR ONLY. REFER TO APPENDIX A FOR MORE INFORMATION.

4. IF MEASURING BATTERY CURRENT, PLACE SHUNT BETWEEN BATTERY POS TERMINAL AND THE BATTERY CONTACTOR. IF MEASURING ALTERNATOR CURRENT, PLACE SHUNT BETWEEN ALTERNATOR B LEAD AND POWER DISTRIBUTION BUS.

Figure B-9.11 GEA 110 Current and Voltage Sensors

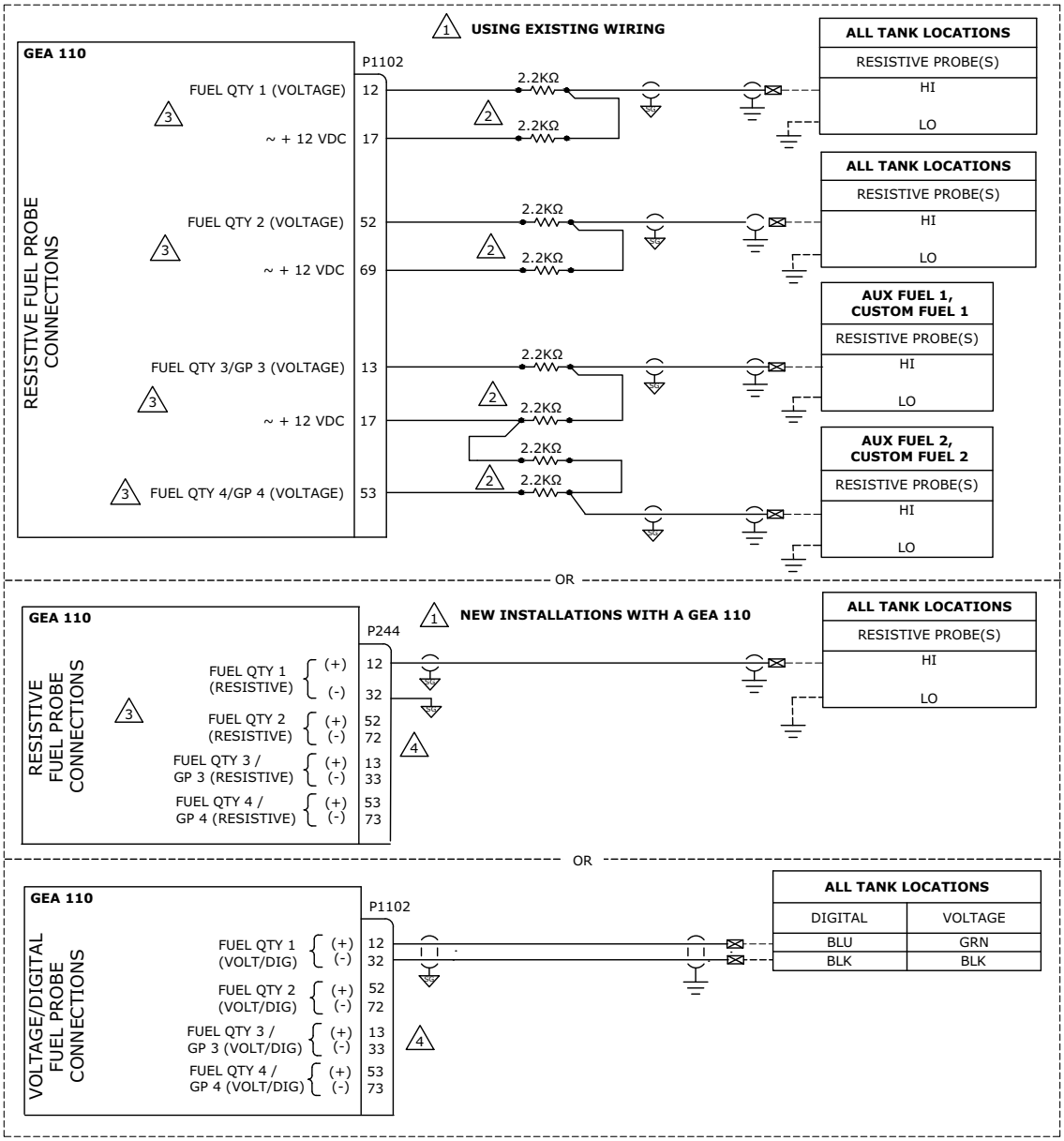

NOTES

1. IT IS NOT RECOMMENDED TO INSTALL RESISTORS FOR GEA 110 INSTALLATIONS, ALTHOUGH IT IS ACCEPTABLE IF ALREADY PRESENT WHEN UPGRADING FROM A GEA 24(B) THAT HAS RESISTORS TO A GEA 110.

2. RESISTORS MUST BE 2.2KΩ (±1%), MINIMUM POWER OF 0.25W, RATED TO MAINTAIN RESISTANCE POWER RATING AT 70°C, AND BE QUALIFIED TO MIL-R-10509. ALL RESISTORS MUST BE SAME PART NUMBER.

3. WHEN RESISTIVE PROBES ARE INSTALLED WITH INLINE RESISTORS, THE CONFIGURATION SETTING MUST BE SET TO “VOLTAGE” TYPE. WHEN RESISTIVE PROBES ARE NOT INSTALLED WITH RESISTORS, THE CONFIGURATION SETTING MUST BE SET TO “RESISTIVE” TYPE.

4. USE THESE INPUTS AS NECESSARY GIVEN ENGINE CONFIGURATION. USE IDENTICAL WIRING FOR ADDITIONAL INPUTS.

Figure B-9.12 GEA 110 Fuel Quantity Wiring

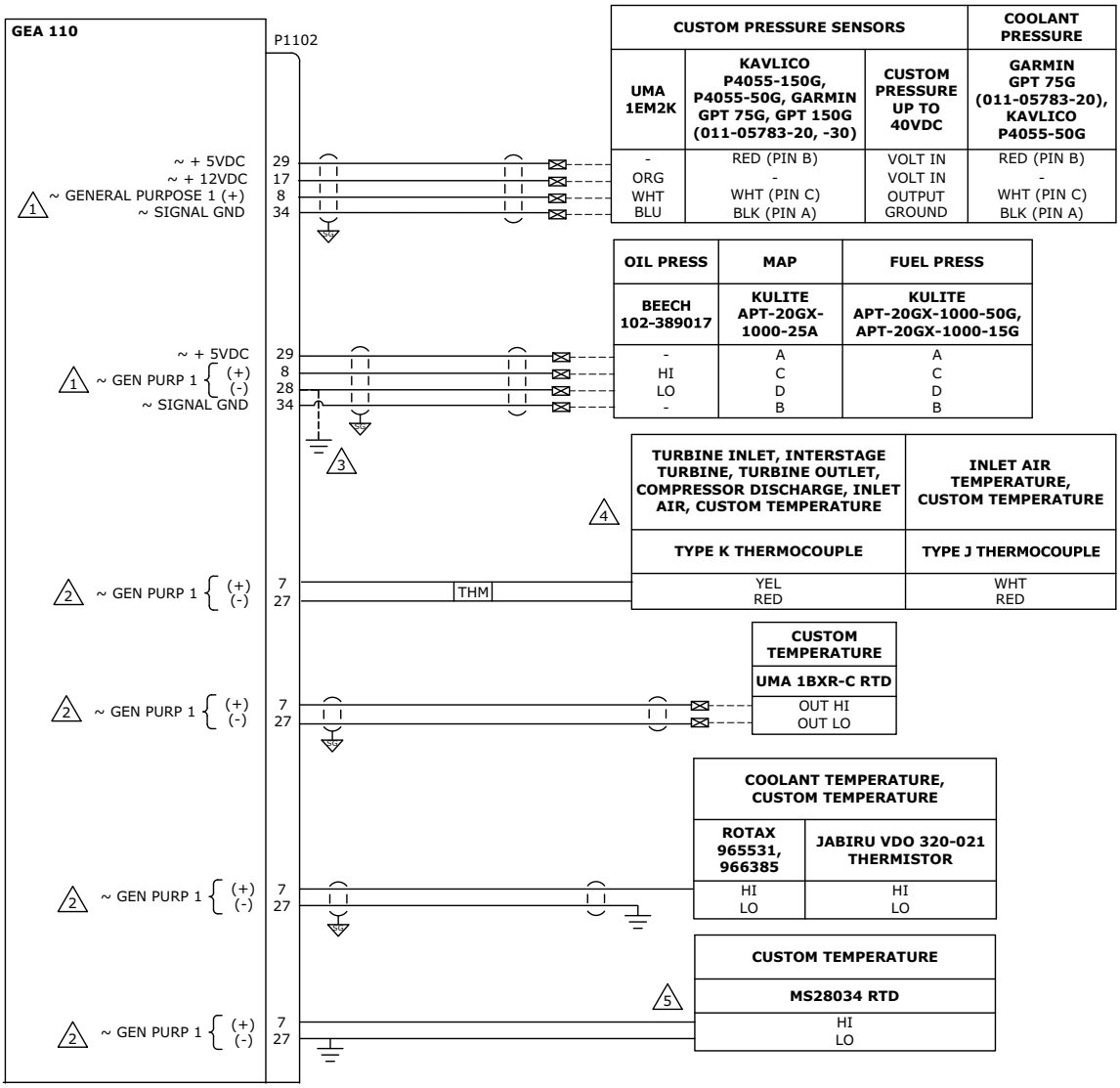

NOTES

1. ANY GENERAL PURPOSE PORT 1 - 6 MAY BE USED. USE IDENTICAL WIRING FOR ADDITIONAL INPUTS.

2. ANY TEMP PORT 1, 2, 5 OR 6 MAY BE USED. USE IDENTICAL WIRING FOR ADDITIONAL INPUTS.

3. AIRCRAFT GROUND ONLY REQUIRED FOR BEECH P/N 102-389017-3 SENSOR.

4. FOR CDT-IAT DIFFERENTIAL TO BE CONFIGURED, INLET AIR TEMP AND COMPRESSOR DISCHARGE SENSOR NEED TO BE WIRED AND CONFIGURED ON TWO GENERAL PURPOSE TEMP INPUTS.

5. USE SOCKET P/N MS39029/30-217 TO INTERFACE WITH RTD P/N MS28034.

Figure B-9.13 GEA 110 General Purpose Sensors
Sheet 1 of 2

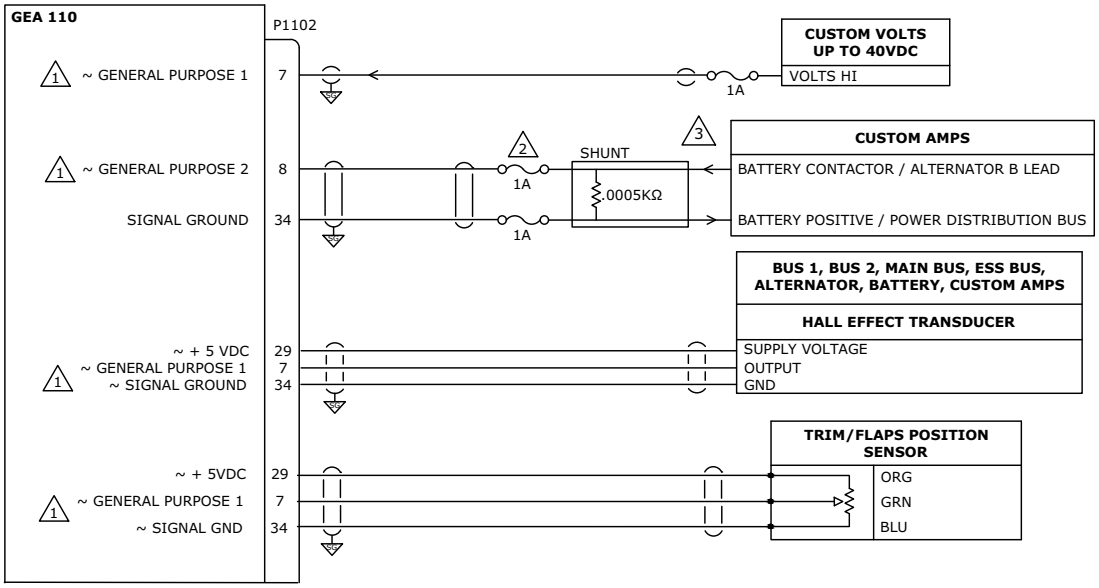

NOTES

1. ANY GENERAL PURPOSE PORT 1 - 6 MAY BE USED. USE IDENTICAL WIRING FOR ADDITIONAL INPUTS.

2. FUSES MUST BE SAME TYPE AND RATING.

3. IF MEASURING BATTERY CURRENT, PLACE SHUNT BETWEEN BATTERY POS TERMINAL & THE BATTERY CONTACTOR. IF MEASURING ALTERNATOR CURRENT, PLACE SHUNT BETWEEN ALTERNATOR B LEAD & POWER DISTRIBUTION BUS.

Figure B-9.13 GEA 110 General Purpose Sensors
Sheet 2 of 2

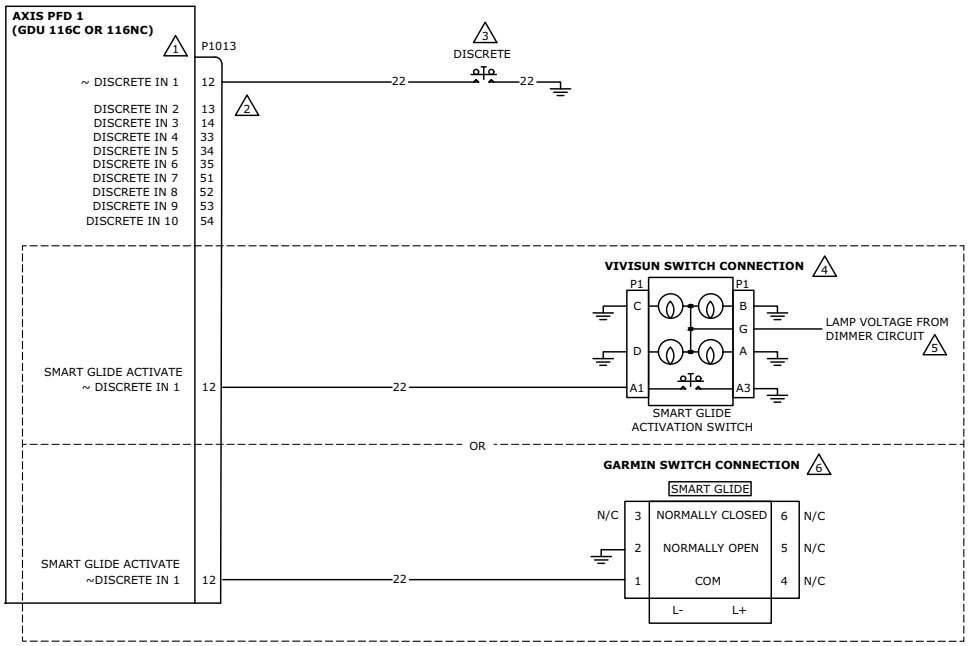

NOTES

1. ALL LISTED SWITCHES ARE OPTIONAL, SHOULD ONLY BE CONNECTED TO PFD 1, AND MUST BE INSTALLED IN A LOCATION READILY ACCESSIBLE AND CLEARLY VISIBLE TO THE PILOT.

2. WIRING IS APPLICABLE FOR THE FOLLOWING DISCRETES:

   - AFCS TO/GA
   - SELECTED COM FREQ SWAP (ONLY SUPPORTED WHEN USING THE GDU'S INTERNAL AUDIO PANEL OR A REMOTE AUDIO PANELCONTROLLED BY THE GDU (E.G. GMA 245R))
   - RESET CAUTION
   - RESET WARNING
   - ESP INHIBIT
   - TAWS INHIBIT OR TERRAIN/OBSTACLE INHIBIT (IF TAWS IS ENABLED, THE TERRAIN/OBSTACLE DISCRETE BECOMES A TAWS INHIBIT DISCRETE. OTHERWISE, TAWS IS NOT AVAILABLE AS A DISCRETE OPTION)
   - TRAFFIC INHIBIT
   - PILOT, COPILOT, & PASSENGER OPT-IN (ONLY SUPPORTED WHEN USING THE GDU'S INTERNAL AUDIO PANEL OR A REMOTE AUDIO PANEL CONTROLLED BY THE GDU (E.G. GMA 245R))

3. USE IDENTICAL WIRING FOR ADDITIONAL INPUTS.
   ACCEPTABLE MOMENTARY-ON SWITCHES INCLUDE:
   A. GRAYHILL P/N 30-3 PUSHBUTTON
   B. GARMIN P/N 340-00258-00 OR OTHER MIL PRF-M8805/110-5112 PUSHBUTTON
   C. TOGGLE SWITCH QUALIFIED TO MIL SPEC, FOR EXAMPLE C&K P/N M83731/9-261 OR -341 (SPDT, MOM ON, MIL-DTL-83731F)

4. USE VIVISUN MOMENTARY SWITCH P/N LED-52-11-HAE-E2WE7 (28V) OR P/N 95-52-11-H4-E2WFN (14 V). MUST BE INSTALLED WITH A RED OUTLINE GUARD P/N 17-672.

5. LAMPS SHOULD RECEIVE POWER FROM THE SAME POWER BUS TO WHICH THE GDU 116 IS CONNECTED.

6. THE RECOMMENDED GUARDED SWITCH IS GARMIN P/N 011-05930-00. MS27718-26-1 (SPDT, MOM ON) OR EQUIVALENT TOGGLE SWITCH WITH A MS25224-3 GUARD IS AN ACCEPTABLE ALTERNATIVE. SINGLE POLE MODELS DO NOT HAVE TERMINALS 4-6.

Figure B-9.14 GDU 116C/NC Discretes
Sheet 1 of 2

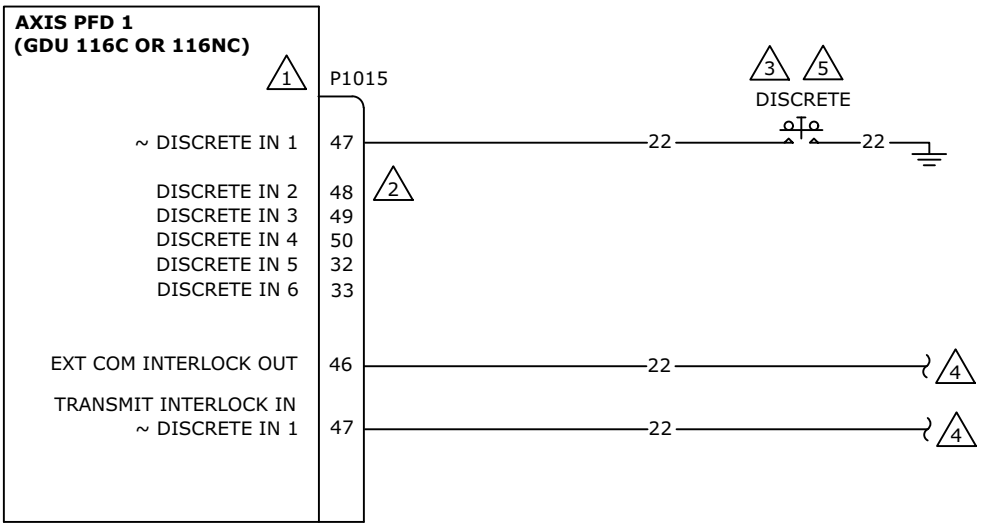

NOTES

1. ALL LISTED SWITCHES ARE OPTIONAL, SHOULD ONLY BE CONNECTED TO PFD 1, AND MUST BE INSTALLED IN A LOCATION READILY ACCESSIBLE AND CLEARLY VISIBLE TO THE PILOT.

2. WIRING IS APPLICABLE FOR THE FOLLOWING DISCRETES:

   - AFCS TO/GA
   - SELECTED COM FREQ SWAP (ONLY SUPPORTED WHEN USING THE GDU'S INTERNAL AUDIO PANEL OR A REMOTE AUDIO PANELCONTROLLED BY THE GDU (E.G. GMA 245R))
   - RESET CAUTION
   - RESET WARNING
   - ESP INHIBIT
   - TAWS INHIBIT OR TERRAIN/OBSTACLE INHIBIT (IF TAWS IS ENABLED, THE TERRAIN/OBSTACLE DISCRETE BECOMES A TAWS INHIBIT DISCRETE. OTHERWISE, TAWS IS NOT AVAILABLE AS A DISCRETE OPTION)
   - TRAFFIC INHIBIT
   - PILOT, COPILOT, & PASSENGER OPT-IN (ONLY SUPPORTED WHEN USING THE GDU'S INTERNAL AUDIO PANEL OR A REMOTE AUDIO PANEL CONTROLLED BY THE GDU (E.G. GMA 245R))

3. USE IDENTICAL WIRING FOR ADDITIONAL INPUTS.
   ACCEPTABLE MOMENTARY-ON SWITCHES INCLUDE:
   A. GRAYHILL P/N 30-3 PUSHBUTTON
   B. GARMIN P/N 340-00258-00 OR OTHER MIL PRF-M8805/110-5112 PUSHBUTTON
   C. TOGGLE SWITCH QUALIFIED TO MIL SPEC, FOR EXAMPLE C&K P/N M83731/9-261 OR -341 (SPDT, MOM ON, MIL-DTL-83731F)

4. IF TWO COM RADIOS ARE INSTALLED, THIS INPUT AND OUTPUT CAN BE CONNECTED TO THE OTHER COM RADIO, INTERLOCK OUT TO INTERLOCK IN AND INTERLOCK IN TO INTERLOCK OUT (OR SPLICED TO PTT INPUT ON THE OTHER COM). RECOMMENDED FOR AIRFRAMES WITH MINIMAL COM TO COM ANTENNA ISOLATION.

5. WHEN THE DISCRETE IS BEING USED FOR AN INTERCOM (ICS) KEY, IT CAN ALSO BE USED WITH 2-STAGE PTT KEYS IN WHICH THE FIRST DETENT ACTIVATES THE ICS KEY AND THE SECOND DETENT ACTIVATES THE COM PTT.

Figure B-9.14 GDU 116C/NC Discretes
Sheet 2 of 2

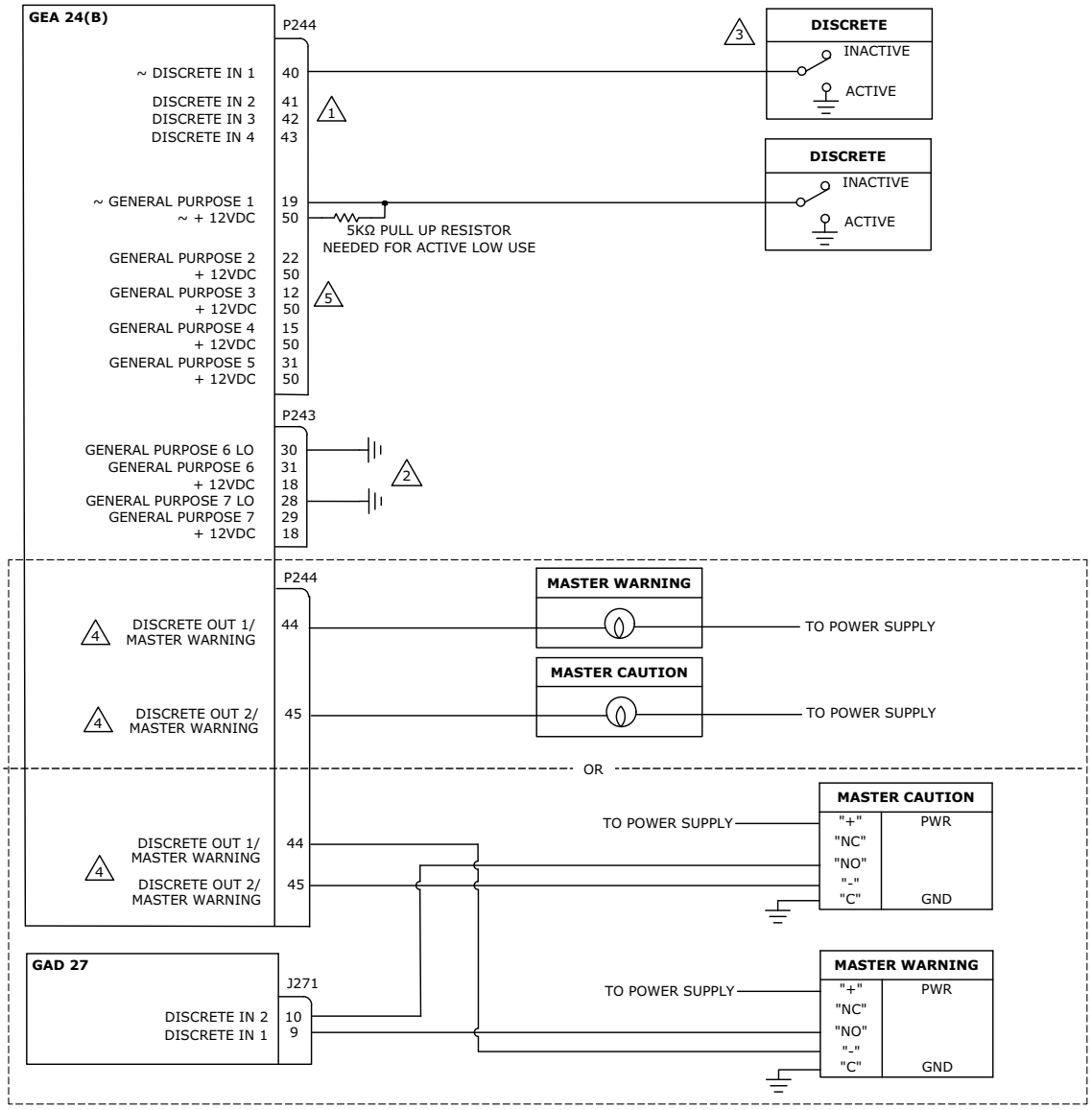

NOTES

1. WIRING IS APPLICABLE FOR THE FOLLOWING DISCRETES: DOOR/CANOPY OPEN, ALT AIR DOOR, BAGGAGE DOOR, GLIDE ACTIVATE. USE IDENTICAL WIRING FOR ADDITIONAL INPUTS.

2. IF USING GP6 OR GP7 FOR GENERAL PURPOSE DISCRETES, THE EQUIVALENT GP6 LO OR GP7 LO MUST BE GROUNDED.

3. WHEN USING A DISCRETE INPUT FOR DETECTING ITEMS SUCH AS CANOPY CLOSURE, IT IS RECOMMENDED TO USE THE GROUNDED STATE AS THE NORMAL SWITCH POSITION (I.E., CANOPY CLOSED) TO AVOID THE POSSIBILITY OF A LATENT FAILURE SUCH AS A BROKEN WIRE OR MICROSWITCH.

4. WHEN A DISCRETE OUTPUT IS ACTIVE, IT IS PULLED TO GROUND & CAN SINK UP TO 20MA OF CURRENT MAXIMUM.

Figure B-9.15 GEA 24(B) Discretes
Sheet 1 of 2

NOTES CONT'D

5 WIRING IS APPLICABLE FOR THE FOLLOWING DISCRETES: GEAR DOWN, STALL SWITCH, SQUAT SWITCH, ESP INHIBIT, AFCS TO/GA, USER DEFINED ALERTS. USE IDENTICAL WIRING FOR ADDITIONAL INPUTS, ANY GENERAL PURPOSE PORT 1 - 7 MAY BE USED.

6 TO HAVE AN AXIS ALERT FOR MASTER WARNINGS, CONFIGURE GAD 27 USER DEFINED DISCRETE INPUTS 1 & 2 WITH DESIRED ALERT COLOR & LABEL FOR MASTER WARNINGS.

Figure B-9.15 GEA 24(B) Discretes
Sheet 2 of 2

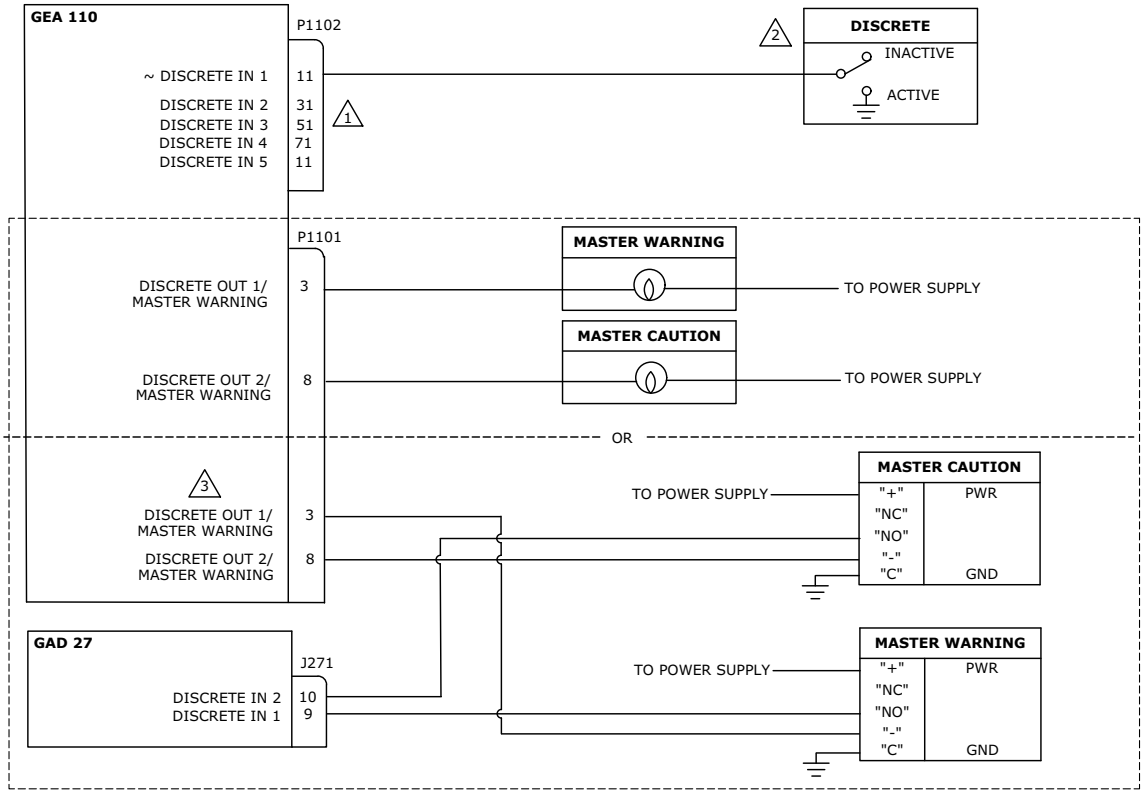

NOTES

1. WIRING IS APPLICABLE FOR THE FOLLOWING DISCRETES: DOOR/CANOPY CLOSED, ALT AIR DOOR, BAGGAGE DOOR, SMART GLIDE ACTIVATE. USE IDENTICAL WIRING FOR ADDITIONAL INPUTS.

2. WHEN USING A DISCRETE INPUT FOR DETECTING ITEMS SUCH AS CANOPY CLOSURE, IT IS RECOMMENDED TO USE THE GROUNDED STATE AS THE NORMAL SWITCH POSITION (I.E., CANOPY CLOSED) TO AVOID THE POSSIBILITY OF A LATENT FAILURE SUCH AS A BROKEN WIRE OR MICROSWITCH.

3. TO HAVE AN AXIS ALERT FOR MASTER WARNINGS, CONFIGURE GAD 27 USER DEFINED DISCRETE INPUTS 1 AND 2 WITH DESIRED ALERT COLOR & LABEL FOR MASTER WARNINGS.

Figure B-9.16 GEA 110 Discretes

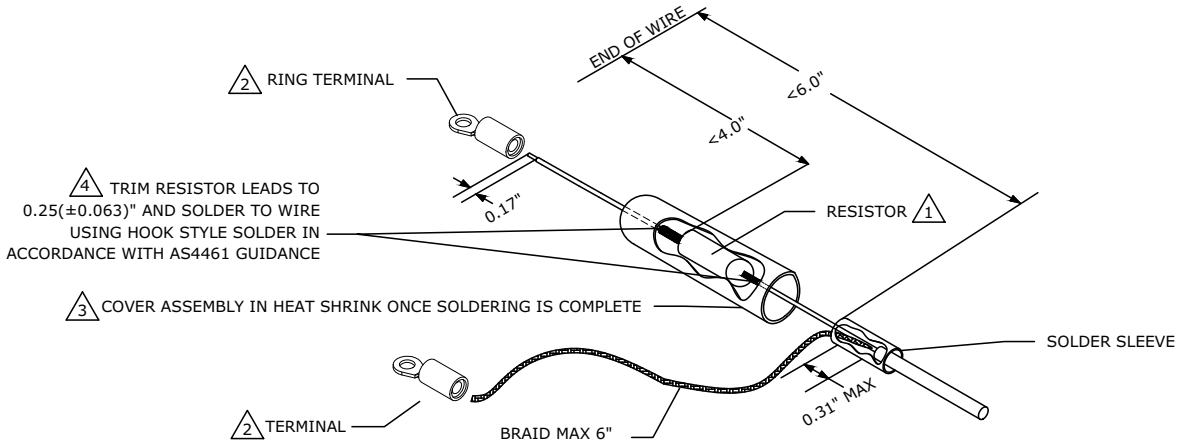

NOTES

1. USE A RESISTOR THAT IS 400 kΩ (±10%), 0.5W, RATED TO MAINTAIN RESISTANCE AND POWER RATING AT 150°C AND BE QUALIFIED TO MIL-R-10509.

2. USE MS25036 TERMINALS OF APPROPRIATE SIZE FOR THE BRAID AND GROUND STUD ON THE MAGNETO OR THE IGNITION SWITCH.

3. USE SELF-SEALING HEAT SHRINK.

4. ACCEPTABLE SOLDER TYPES ARE SN60 OR SN63. CLEAN FLUX RESIDUES USING AN APPROPRIATE FLUX CLEANER.

Figure B-9.17 P-Lead Resistor Installation - Braid Shield

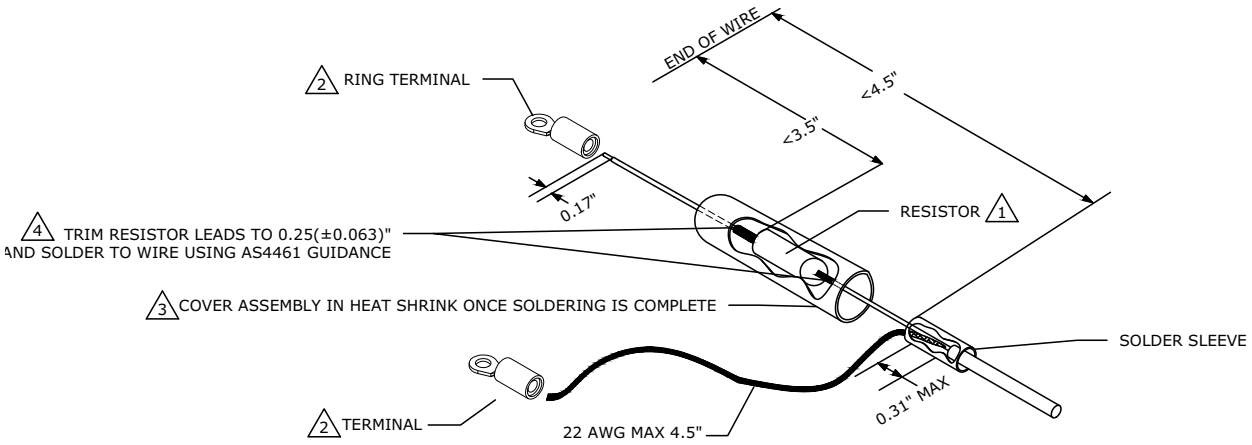

NOTES

1. USE A RESISTOR THAT IS 400 kΩ (±10%), 0.5W, RATED TO MAINTAIN RESISTANCE AND POWER RATING AT 150°C AND BE QUALIFIED TO MIL-R-10509.

2. USE MS25036 TERMINALS OF APPROPRIATE SIZE FOR THE BRAID AND GROUND STUD ON THE MAGNETO OR THE IGNITION SWITCH.

3. USE SELF-SEALING HEAT SHRINK.

4. ACCEPTABLE SOLDER TYPES ARE SN60 OR SN63. CLEAN FLUX RESIDUES USING AN APPROPRIATE FLUX CLEANER.

Figure B-9.18 P-Lead Resistor Installation - Stranded Wire Shield

ASSEMBLY OF IN-LINE FUSE HOLDER P/N 330-01791-10

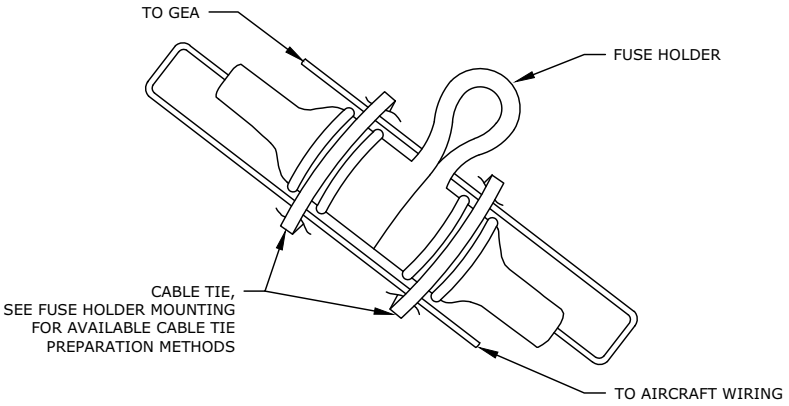

PART PREPARATION

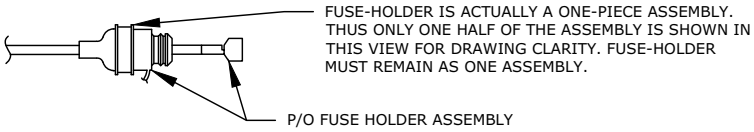

FUSE HOLDER MOUNTING
(TYPICAL)

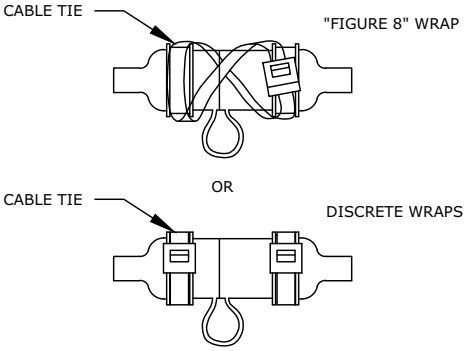

NOTES

1 CRIMP FUSE HOLDER LEADS TO WIRE WITH CRIMP TOOLS REFERENCED IN SECTION 3.3.4.

2 INSTALL FUSE, CLOSE FUSE HOLDER, AND ATTACH FUSE HOLDER TO EXISTING BUNDLE OR STRUCTURE USING CABLE TIES.

3 FUSE HOLDERS MUST BE SEPARATED BY A MINIMUM OF SIX INCHES.

Figure B-9.19 Fuse Holder Assembly

B.10 Lycoming/Continental Sensor Wiring Examples

UNLESS OTHERWISE SPECIFIED, SENSORS SHOWN IN THIS SECTION ARE INCLUDED IN THE GARMIN 4-CYLINDER SENSOR KIT, P/N K00-00512-10.

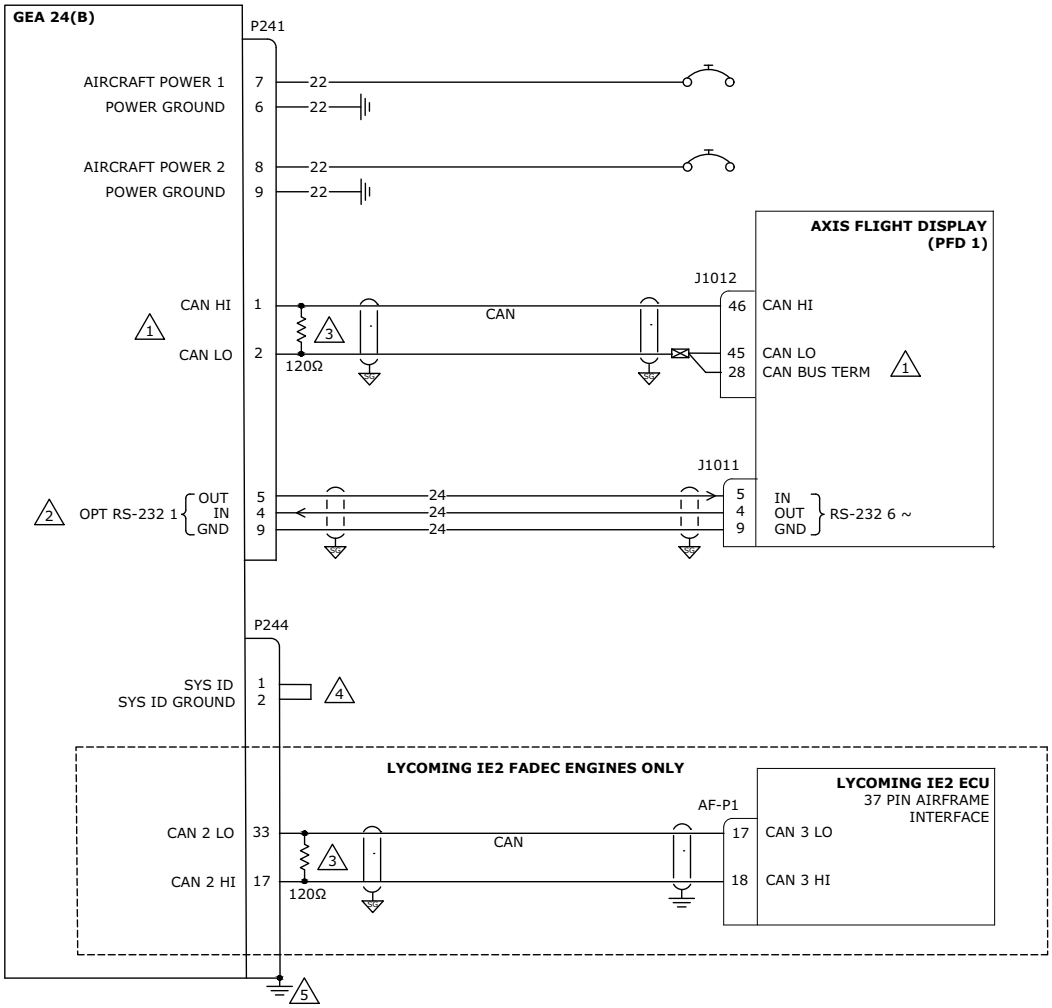

NOTES

1. REMOTE ENDS OF THE CAN BUS MUST BE TERMINATED.

2. ADDITIONAL RS-232 CONNECTION IS OPTIONAL BUT RECOMMENDED. THIS CONNECTION IS FOR DISPLAY BACKUP.

3. IF THE GEA IS AT THE END OF THE CAN BUS, INSTALL A 1/8W, 5%, 120Ω RESISTOR ACROSS THE CAN HI/LO PINS AT THE P244 CONNECTOR TO TERMINATE THE CAN BUS.

4. ONLY INSTALL THIS JUMPER FOR A GEA #2.

5. THE CHASSIS ON THE LRU SHALL BE BONDED TO THE AIRFRAME GROUND.

Figure B-10.1 GEA 24(B) Lycoming/Continental Interface (4- and 6-Cylinder)

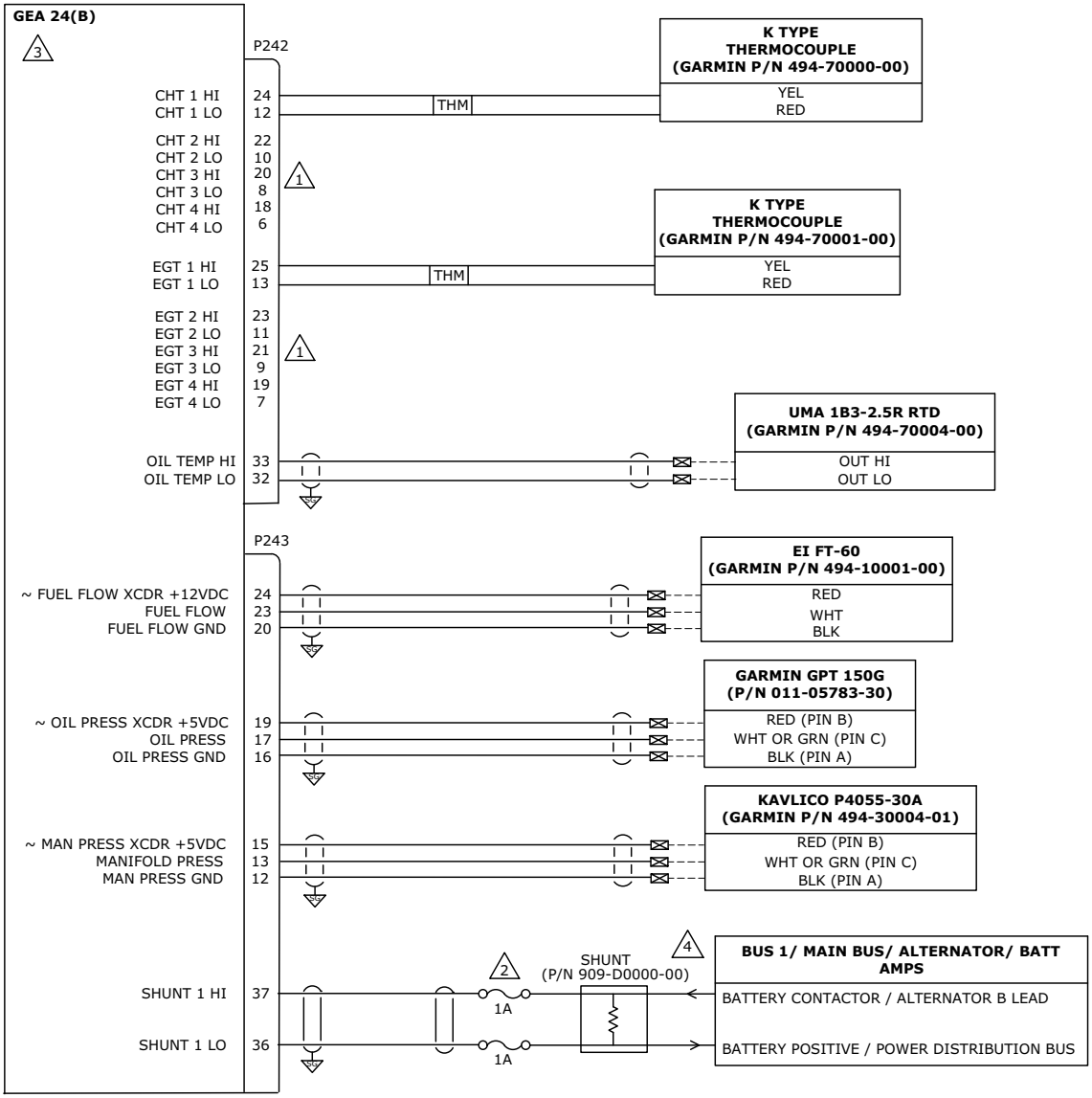

NOTES

1. USE IDENTICAL WIRING FOR ADDITIONAL INPUTS.

2. FUSES MUST BE SAME TYPE AND RATING.

3. FOR ADDITIONAL SENSOR WIRING, SEE THE GENERAL GEA 24(B) INTERCONNECTS, REFER TO SECTION B.9.

4. IF MEASURING BATTERY CURRENT, PLACE SHUNT BETWEEN BATTERY POS TERMINAL AND THE BATTERY CONTACTOR. IF MEASURING ALTERNATOR CURRENT, PLACE SHUNT BETWEEN ALTERNATOR B LEAD AND POWER DISTRIBUTION BUS.

Figure B-10.2 GEA 24(B) Lycoming/Continental Interface (4- and 6-Cylinder)

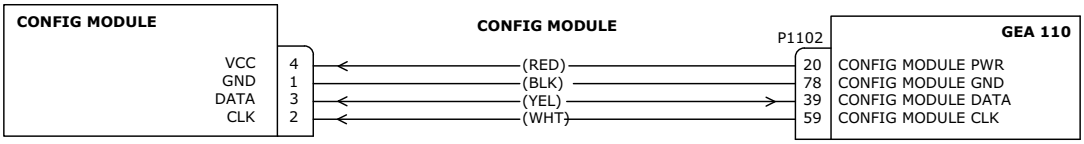

SINGLE GDU INTERCONNECT

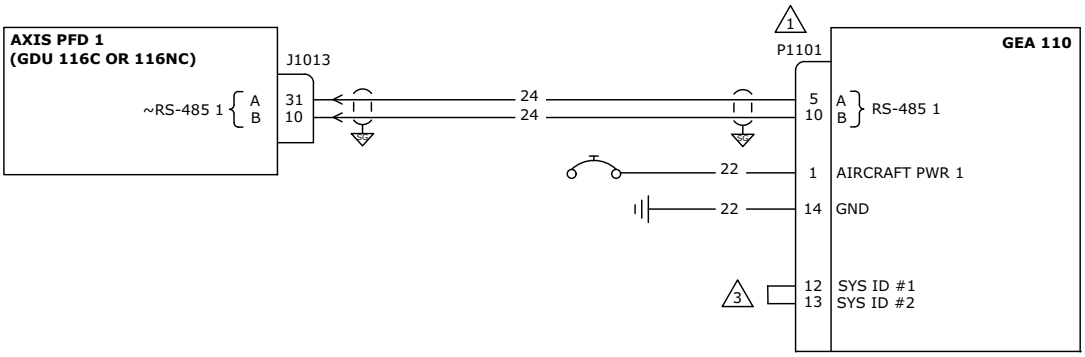

DUAL GDU INTERCONNECT

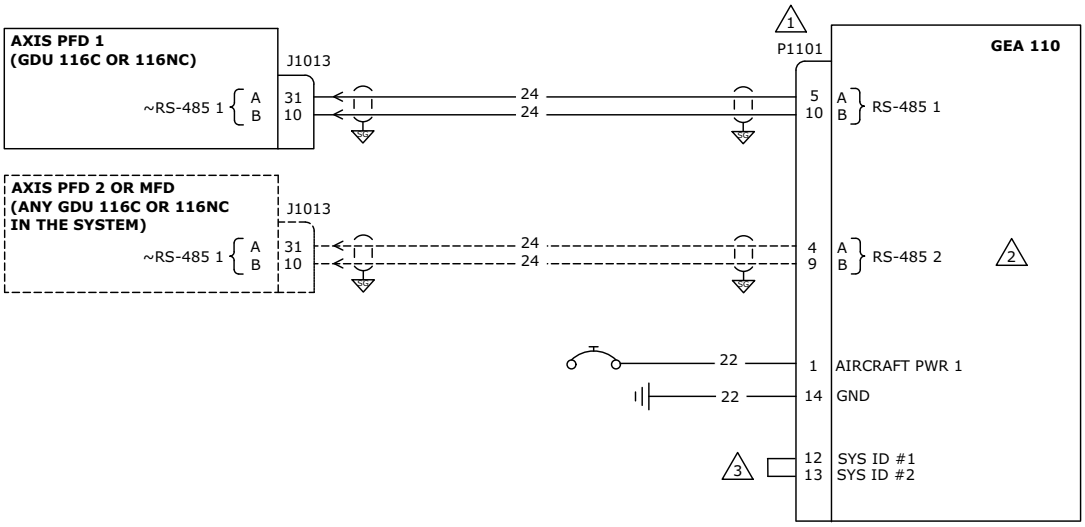

NOTES

1. ENSURE THE 15 PIN D-SUB CONNECTOR IS ORIENTATED PROPERLY, DAMAGE WILL OCCUR IF THE CONNECTOR IS INSTALLED UPSIDE DOWN.

2. BACKUP RS-485 CONNECTION TO A SECOND DISPLAY IS REQUIRED IF THE SECOND DISPLAY IS A GDU 116C OR 116NC.

3. ONLY INSTALL THIS JUMPER FOR A GEA #2.

Figure B-10.3 GEA 110 Lycoming/Continental Interface (4- and 6-Cylinder)

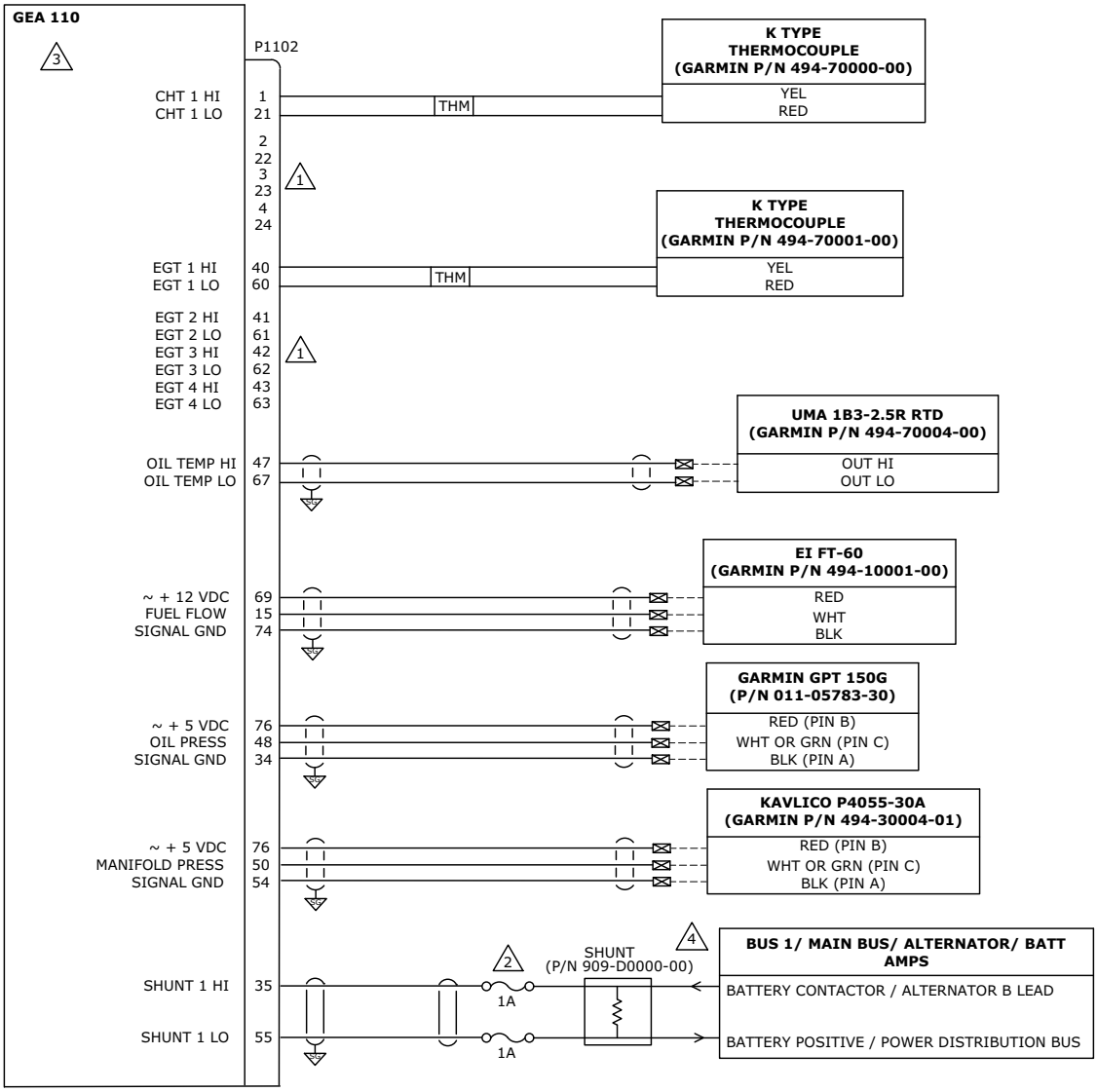

NOTES

1. USE IDENTICAL WIRING FOR ADDITIONAL INPUTS.

2. FUSES MUST BE SAME TYPE AND RATING.

3. FOR ADDITIONAL SENSOR WIRING, SEE THE GENERAL GEA 24(B) INTERCONNECTS, REFER TO SECTION B.9.

4. IF MEASURING BATTERY CURRENT, PLACE SHUNT BETWEEN BATTERY POS TERMINAL AND THE BATTERY CONTACTOR. IF MEASURING ALTERNATOR CURRENT, PLACE SHUNT BETWEEN ALTERNATOR B LEAD AND POWER DISTRIBUTION BUS.

Figure B-10.4 GEA 110 Lycoming/Continental Interface (4- and 6-Cylinder)

B.11 PT6A Sensor Wiring Examples

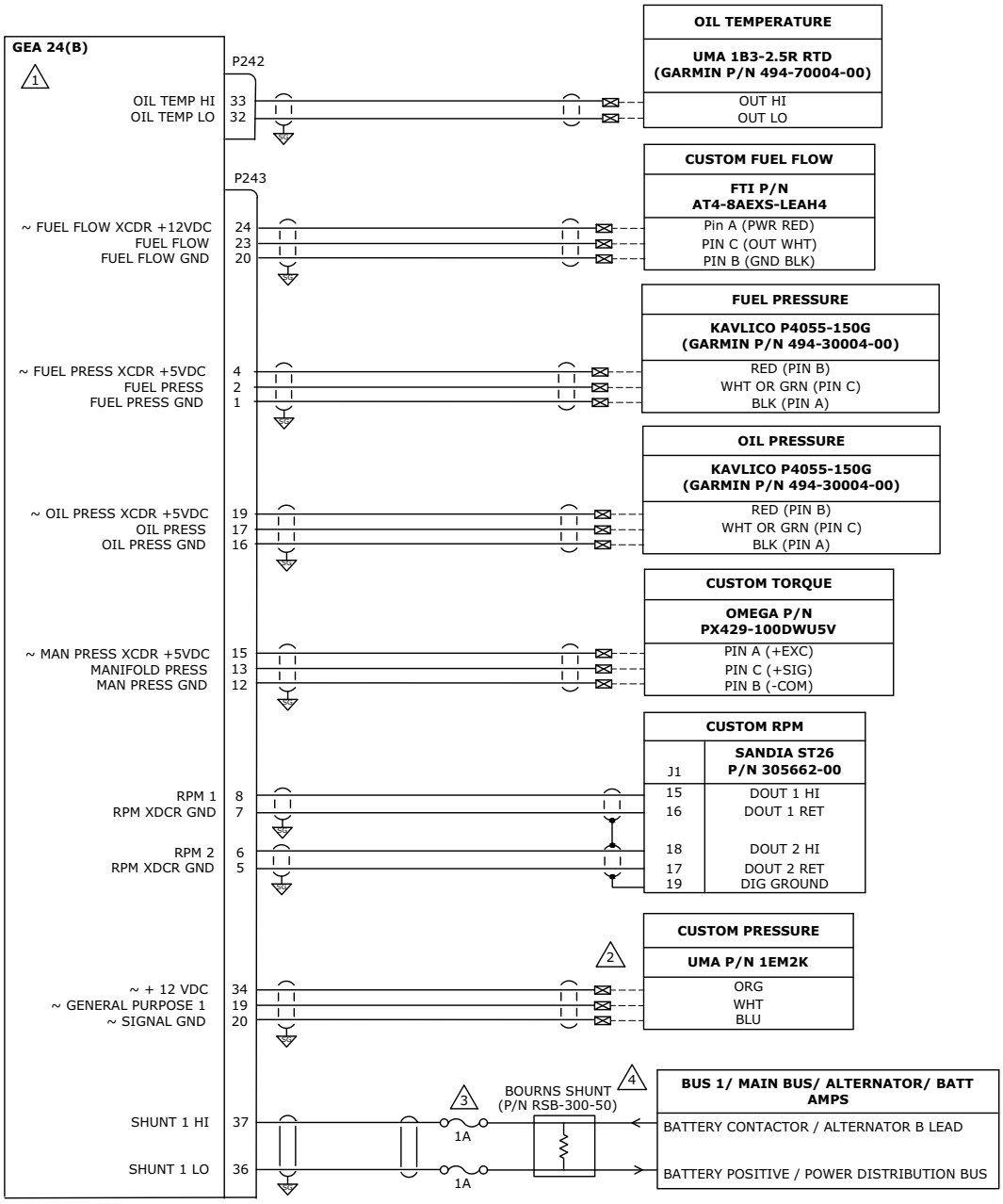

NOTES

1. FOR GEA POWER/GROUNDS, REFER TO FIGURE B-9.4.
2. USE IDENTICAL WIRING FOR ADDITIONAL CUSTOM PRESSURE SENSORS. GENERAL PURPOSE PORTS 1 - 7 MAY BE USED.
3. FUSES MUST BE SAME TYPE AND RATING.
4. IF MEASURING BATTERY CURRENT, PLACE SHUNT BETWEEN BATTERY POS TERMINAL & THE BATTERY CONTACTOR. IF MEASURING ALTERNATOR CURRENT, PLACE SHUNT BETWEEN ALTERNATOR B LEAD & POWER DISTRIBUTION BUS.

Figure B-11.1 GEA 24(B) PT6A Interconnect

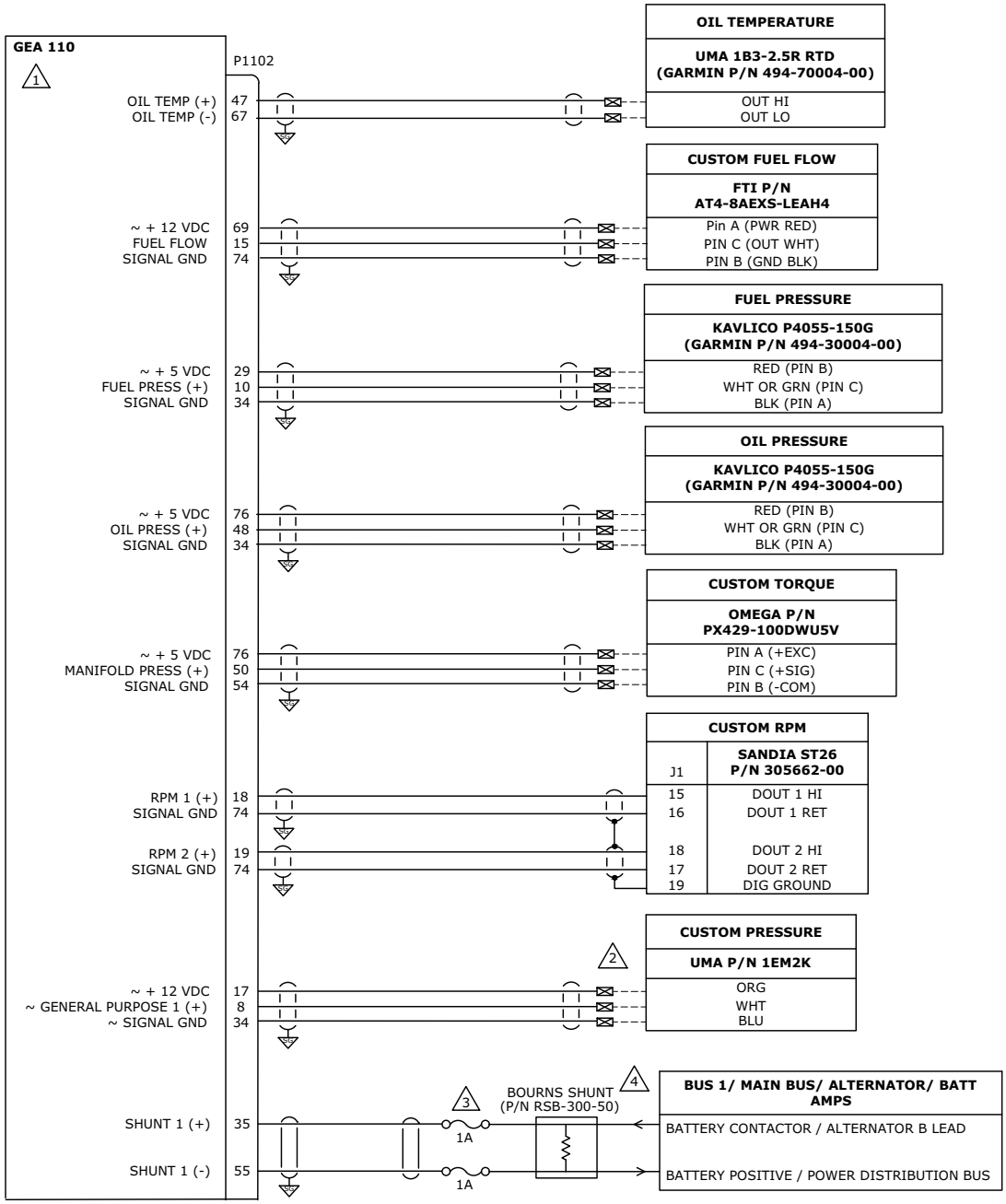

NOTES

1. FOR GEA POWER/GROUNDS, REFER TO FIGURE B-9.4.
2. USE IDENTICAL WIRING FOR ADDITIONAL CUSTOM PRESSURE SENSORS. GENERAL PURPOSE PORTS 1 - 6 MAY BE USED.
3. FUSES MUST BE SAME TYPE AND RATING.
4. IF MEASURING BATTERY CURRENT, PLACE SHUNT BETWEEN BATTERY POS TERMINAL AND THE BATTERY CONTACTOR. IF MEASURING ALTERNATOR CURRENT, PLACE SHUNT BETWEEN ALTERNATOR B LEAD AND POWER DISTRIBUTION BUS.

Figure B-11.2 GEA110 PT6A Interconnect

B.12 Rotax Sensor Wiring Examples

UNLESS OTHERWISE SPECIFIED, SENSORS SHOWN IN SECTION B.11 ARE APPLICABLE TO BOTH ROTAX 912 AND 914 ENGINES.

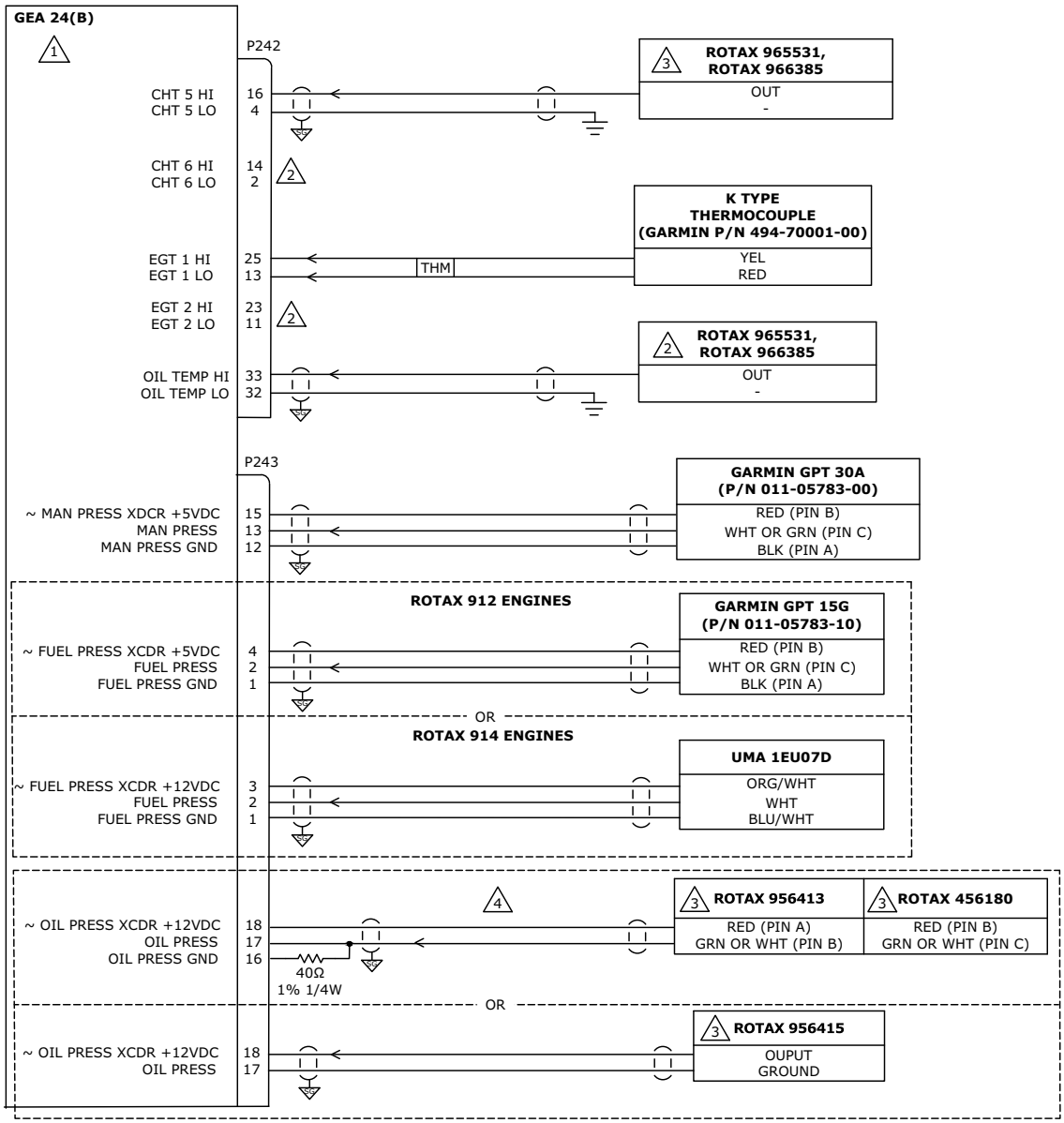

NOTES

1. FOR GEA POWER/GROUNDS REFER TO FIGURE B-9.4.
2. USE IDENTICAL WIRING FOR ADDITIONAL INPUTS.
3. SENSORS SUPPLIED WITH THE ENGINE.
4. ROTAX P/N 456180, 956413, OR 956415 MAY BE USED FOR OIL PRESSURE.

Figure B-12.1 GEA 24(B) Rotax Interconnect

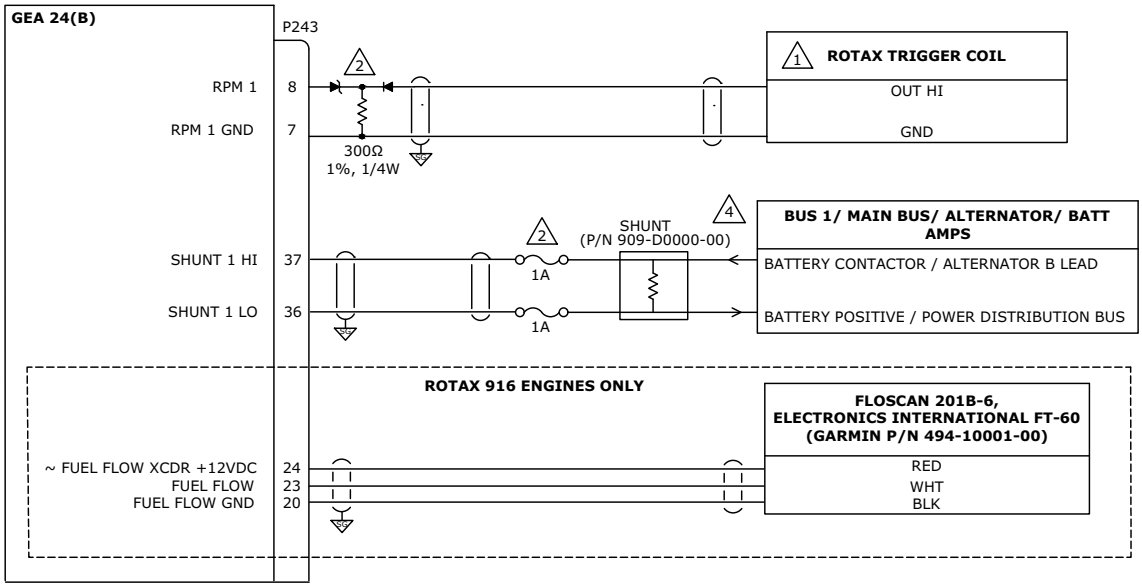

NOTES

1. FOR ROTAX RPM 1, USE GARMIN P/N 682-00012-00 ZENER DIODE, P/N 680-00006-D0 DIODE, AND P/N 902-A300R-F0 300Ω 1% 1/2W RESISTOR AS SHOWN. THESE THREE PARTS ARE INCLUDED IN KIT P/N 011-02348-00.

2. SENSORS SUPPLIED WITH THE ENGINE.

3. FUSES MUST BE SAME TYPE AND RATING.

4. IF MEASURING BATTERY CURRENT, PLACE SHUNT BETWEEN BATTERY POS TERMINAL AND THE BATTERY CONTACTOR. IF MEASURING ALTERNATOR CURRENT, PLACE SHUNT BETWEEN ALTERNATOR B LEAD AND POWER DISTRIBUTION BUS.

Figure B-12.2 GEA 24(B) Rotax Interconnect

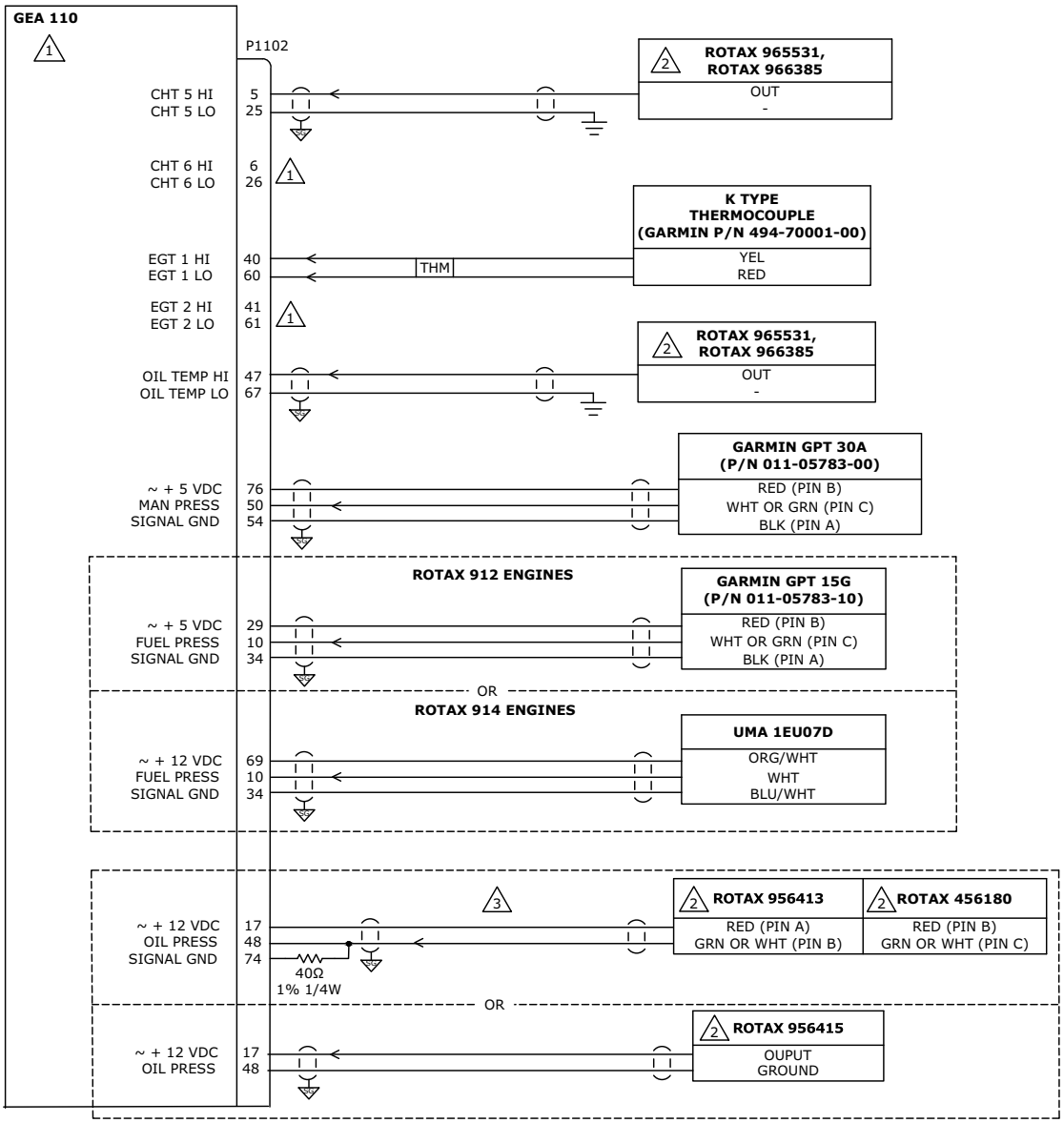

NOTES

1. FOR GEA POWER/GROUNDS REFER TO FIGURE B-9.4.
2. USE IDENTICAL WIRING FOR ADDITIONAL INPUTS.
3. SENSORS SUPPLIED WITH THE ENGINE.
4. ROTAX P/N 456180, 956413, OR 956415 MAY BE USED FOR OIL PRESSURE.

Figure B-12.3 GEA 110 Rotax Interconnect

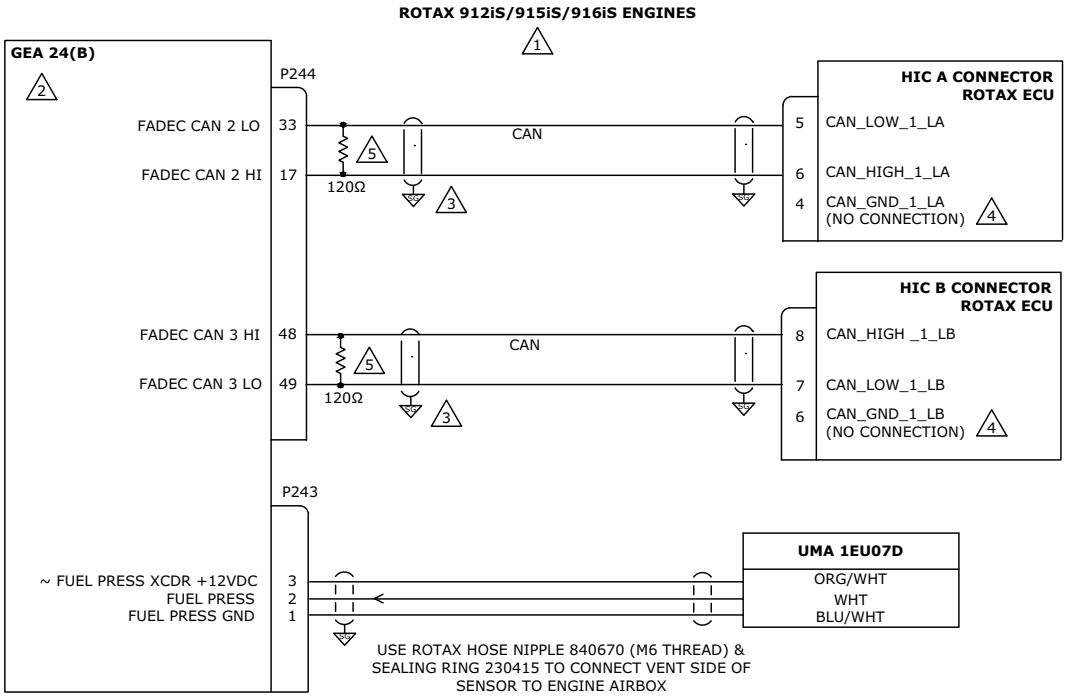

NOTES

1. ROTAX 912IS/915IS/916IS ENGINES MUST USE THE GEA 24(B).

2. FOR GEA POWER/GROUNDS REFER TO FIGURE B-9.4.

3. CAN NODE LENGTH 0.3 METER MAXIMUM.

4. THE CAN BUS CONNECTING THE HIC A/B CONNECTORS ARE TERMINATED INSIDE, SO NO ADDITIONAL CAN TERMINATION IS REQUIRED.

5. 120Ω TERMINATING RESISTORS REQUIRED TO BE INSTALLED BETWEEN THE CAN HI AND LO AT THE GEA 24B CONNECTOR FOR BOTH CAN 2 AND CAN 3.

Figure B-12.4 GEA 24 FADEC Interconnect

APPENDIX C EQUIPMENT COMPATIBILITY AND CONFIGURATION

C.1 Standby Flight Display C-3
C.1.1 GI 275 ..... C-3
C.1.2 G5 ..... C-4
C.2 Small Format Navigators C-5
C.2.1 GPS 175 ..... C-5
C.2.2 GNC 355 ..... C-6
C.2.3 GNX 375 ..... C-7
C.3 GTN Xi Series Navigators C-8
C.4 GTN Series Navigators C-9
C.5 GNS Series Navigators C-10
C.6 GNS 480 Navigator C-11
C.7 COM C-12
C.7.1 GTR 200(B) C-12
C.7.2 GTR 20 ..... C-12
C.7.3 GTR 205(x) C-13
C.7.4 GTR 205R(x) C-14
C.7.5 GTR 225 ..... C-14
C.7.6 SL 40 ..... C-14
C.8 NAV/COM C-15
C.8.1 SL 30 ..... C-15
C.8.2 GNC 255 ..... C-15
C.8.3 GNC 215 ..... C-16
C.9 Transponders C-18
C.9.1 GTX 345/345D C-18
C.9.2 GTX 345R/345DR/45R C-19
C.9.3 GNX 375 ..... C-19
C.9.4 GTX 327/328/330/330ES C-19
C.9.5 GTX 325/335/335D C-20
C.9.6 GTX 35R/335R/335DR C-20
C.10 Aircraft Batteries C-21
C.10.1 True Blue Battery C-21
C.10.2 EarthX Battery C-21
C.11 Engine Sensor Applications C-22
C.11.1 Lycoming/Continental Engine Applications C-22
C.11.2 Rotax Engine Applications C-24
C.11.3 Jabiru Engine Applications C-25
C.11.4 UL Power Engine Applications C-26
C.11.5 Other Piston Engine Applications C-27
C.11.6 Retrofit Engine Applications C-27
C.11.7 Turbine Engine Applications C-29
C.11.8 Twin-Engine Applications C-29
C.11.9 Rotorcraft Applications C-30
C.11.10 FADEC Engine Status C-30
C.12 EIS Sensors C-31
C.13 Antennas C-36
C.13.1 GPS/WAAS C-36
C.13.2 ADS-B C-37
C.13.3 COM C-37

C.13.4 VHF NAV C-38
C.13.5 Glideslope C-38
C.13.6 Marker Beacon C-38

C.1 Standby Flight Display

C.1.1 GI 275

Configure the GI 275 as follows for interface to the AXIS flight display system:

Table C-1 GI 275

INTERFACING EQUPMENT CONFIGURATION SETTINGS
UNIT TYPE > UNIT CONFIGURATION PAGE
Instrument Type: ADI Standby: Enabled Unit Location: Pilot Unit ID: [5]
FEATURE ENABLE PAGE
Standby Flight Instrument: Enabled
INTERFACES PAGE
ADC 1: AXIS Display [1] ADC 2: AXIS Display (if applicable) ADC STBY: Internal AHRS 1: AXIS Display AHRS 2: AXIS Display (if applicable) AHRS STBY: Internal GPS ( ): AXIS Display [2] NAV ( ): AXIS Display [3] PFD Sync: AXIS Display
SETUP > AIRFRAME CONFIG > AIR DATA SETUP PAGE
Airspeed Bug: Disabled
SETUP > PAGE CONFIG PAGE
Configure MFD pages as desired.
SETUP > SENSORS PAGE
Default ADC: ADC STBY Default AHRS: AHRS STBY
SETUP > TERRAIN PAGE
External TAWS: Installed (HSDB) [4]
SETUP > MISCELLANEOUS PAGE
BARO Standby SYNC: Always On CDI Standby SYNC: Always On

[1] Configure the AXIS GDUs Installed in the system.

[2] If interfaced to one or more GDU 116C/NC units.

[3] If interfaced to one or more GDU 116NC units.

[4] If the AXIS flight display has enabled TAWS-B per section 5.9.4.

[5] Up to two GI 275s can be installed in an AXIS system. GI 275s are assigned SFD 1 or SFD 2, based on the order in which they are added to the system, using the AXIS Device Application. Select the corresponding UNIT ID using this setting, to associate the specified GI 275 with SFD 1 or SFD 2.

C.1.2 G5

Configure the G5 as follows for interface to the AXIS Flight display system:

With the AXIS flight display powered off, under Device Information, configure Installation Type as "Integrated System Backup."

NOTE

When configured as backup, the V-speeds configured on the AXIS flight display will be automatically transferred to the G5 airspeed tape.

C.2 Small Format Navigators

Configure the AXIS flight display and interfaced Small Format Navigator (if installed) per the following tables.

NOTE

ARINC 429 data path configuration is only necessary if the system includes a G5 Standby Flight Display.

C.2.1 GPS 175

Table C-2 GPS 175

AXIS Configuration Settings	Interfacing Equipment Configuration Settings
AXIS GPS 175 MODIFICATION PAGE	**GPS 175 MAIN SYSTEM CONFIGURATION PAGE**
GPS System ID: GPS 1 or GPS 2 [1]	System ID: GPS 1 or GPS 2 [1] External FPL: Enabled
	GPS 175 INTERFACED EQUIPMENT - ARINC 429 CONFIGURATION PAGE
ARINC 429 GPS Input Port: [2] ARINC 429 EFIS Output Port: [2] ARINC 429 EFIS Output SDI: LNAV 1 or LNAV 2 [4]	ARINC TX Port 1: GAMA FORMAT 1, Low Speed [2] ARINC RX Port '#': EFIS/ADC, Low Speed [2] ARINC 429 SDI: LNAV 1 or LNAV 2 [2] [3]
	GPS 175 INTERFACED EQUIPMENT CONFIGURATION PAGE
	GDU: AXIS Display
	Selected Course: Allowed

[1] System ID value must match on both AXIS modification page and the GPS175 system configuration page. Based on the selection, the GPS 175 is assigned GPS 1 or GPS 2 in the AXIS system, as applicable. This selection also dictates which ARINC 429 SDI the AXIS system expects for the GPS ARINC 429 output from the specified GPS175.

[2] Optional backup path to provide GPS Data to a connected G5 in the system. A G5 in the system can only receive ARINC 429 data from a GPS 175, via GAD 29 or GSU 73. Use any available port present on a GAD 29 or GSU 73.

[3] SDI must match the value of the System ID value selected on the AXIS Modification page.

[4] Must match the SDI value selected in GPS175 ARINC 429 Configuration page.

C.2.2 GNC 355

Table C-3 GNC 355

AXIS Configuration Settings	Interfacing Equipment Configuration Settings
AXIS GNC 355 MODIFICATION PAGE	**GNC 355 MAIN SYSTEM CONFIGURATION PAGE**
GNC System ID: GNC 1 or GNC 2 [1]	System ID: GNC 1 or GNC 2 [1] External FPL: Enabled
	GNC 355 INTERFACED EQUIPMENT - ARINC 429 CONFIGURATION PAGE
ARINC 429 GPS Input Port: [2] ARINC 429 EFIS Output Port: [2] ARINC 429 EFIS Output SDI: LNAV 1 or LNAV 2 [4]	ARINC TX Port 1: GAMA FORMAT 1, Low Speed [2] ARINC RX Port '#': EFIS/ADC, Low Speed [2] ARINC 429 SDI: LNAV 1 or LNAV 2 [2] [3]
	GNC 355 INTERFACED EQUIPMENT CONFIGURATION PAGE
	GDU: AXIS Display
	Selected Course: Allowed

[1] System ID value must match on both AXIS modification page and the GNC 355 main system configuration page. Based on the selection, the GNC 355 is assigned GPS1/COM1 or GPS2/COM2 in the AXIS system, as applicable. This selection also dictates which ARINC 429 SDI the AXIS system expects for the GPS ARINC 429 output from the specified GNC 355.

[2] Optional backup path to provide GPS Data to a connected G5 in the system. A G5 in the system can only receive ARINC 429 data from a GNC 355 Navigator, via GAD 29 or GSU 73. Use any available port present on a GAD 29 or GSU 73.

[3] SDI must match the value of the System ID value selected on the AXIS Modification page.

[4] Must match the SDI value selected in the GNC 355 ARINC 429 Configuration page.

C.2.3 GNX 375

Table C-4 GNX 375

AXIS Configuration Settings	Interfacing Equipment Configuration Settings
AXIS GNX 375 MODIFICATION PAGE	**GNX 375 MAIN SYSTEM CONFIGURATION PAGE**
GNX System ID: GNX 1 or GNX 2 [1]	System ID: GNX 1 or GNX 2 [1] External FPL: Enabled
	GNX 375 INTERFACED EQUIPMENT - ARINC 429 CONFIGURATION PAGE
ARINC 429 GPS Input Port: [2] ARINC 429 EFIS Output Port: [2] ARINC 429 EFIS Output SDI: LNAV 1 or LNAV 2 [4]	ARINC TX Port 1: GAMA FORMAT 1, Low Speed [2] ARINC RX Port '#': EFIS/ADC, Low Speed [2] ARINC 429 SDI: LNAV 1 or LNAV 2 [2] [3]
	GNX 375 INTERFACED EQUIPMENT CONFIGURATION PAGE
	GDU: AXIS Display
	Selected Course: Allowed

[1] System ID value must match on both AXIS modification page and the GNX 375 Main system configuration page. Based on the selection, the GNX 375 is assigned GPS 1 or GPS 2 in the AXIS system, as applicable. This selection also dictates which ARINC 429 SDI the AXIS system expects for the GPS ARINC 429 output from the specified GNX 375.

[2] Optional backup path to provide GPS Data to a connected G5 in the system. A G5 in the system can only receive ARINC 429 data from a GNX 375 Navigator, via GAD 29 or GSU 73. Use any available port present on a GAD 29 or GSU 73.

[3] SDI must match the value of the System ID value selected on the AXIS modification page.

[4] Must match the SDI value selected in the GNX 375 ARINC 429 configuration page.

C.3 GTN Xi Series Navigators

Configure the AXIS flight display and interfaced GTN Xi Series Navigator (if installed) per table C-5.

NOTE

ARINC 429 data path configuration is only necessary if the system includes a G5 Standby Flight Display.

Table C-5 GTN Xi Series Navigators

AXIS Configuration Settings	Interfacing Equipment Configuration Settings
AXIS GTN Xi MODIFICATION PAGE	**SYSTEM SETUP CONFIGURATION PAGE**
GTN System ID: GTN Xi 1 or GTN Xi 2 [1]	System ID: GTN 1 or GTN 2 [1]
	GTN SETUP > ARINC 429 CONFIGURATION PAGE
ARINC 429 GPS Input Port: [2] ARINC 429 EFIS Output Port: [2] ARINC 429 EFIS Output SDI: LNAV 1 or LNAV 2 [2] [4]	ARINC 429 Out “#”: GARMIN 429, Low Speed [2] ARINC 429 In “#”: GDU FORMAT 2, Low Speed [2] SDI: LNAV 1 or LNAV 2 [2] [3]
	GTN SETUP > VOR/LOC/GS CONFIGURATION PAGE
ARINC 429 NAV Input Port: [2] [5]	NAV Radio: Enabled [2] [5] TX Speed: Low Speed [2] [5] SDI: VOR/ILS 1 or VOR/ILS 2 [2] [3] [5]
	GTN SETUP > MAIN INDICATOR (ANALOG) CONFIGURATION PAGE
	Selected Course for VLOC: Allowed [5] CDI Key: Enabled is allowed and must be set on both GTN Xis, if present [5]
	GTN SETUP > MAIN SYSTEM CONFIGURATION PAGE
	Crossfill Status Alert: Disabled
	External Flight Plan: Disabled
	GTN SETUP > INTERFACED EQUIPMENT CONFIGURATION PAGE
	AXIS Flight Display: Present, Select applicable displays.

[1] GTN Xi System ID must match on both AXIS modification page and GTN Xi Main system configuration page. The selected value results in the interfaced GTN Xi being assigned GPS1/NAV1/COM1 or GPS2/NAV2/COM2 in the AXIS system, as applicable. This selection also dictates what ARINC 429 SDI the AXIS system expects for GPS and NAV inputs from the specified GTN Xi.

[2] Optional backup path to provide GPS and NAV Data to a connected G5 in the system. A G5 in the system can only receive ARINC 429 data from a GTN Xi Navigator, via GAD 29 or GSU 73. Use any available port present on a GAD 29 or GSU 73.

[3] SDI must match the value of the GTN System ID selected on the AXIS Modification page.

[4] Must match the SDI value selected in the GTN Xi ARINC 429 Configuration page.

[5] Not applicable to GTN 625Xi, 635Xi, 725Xi or 735Xi.

C.4 GTN Series Navigators

Configure the AXIS flight display and interfaced GTN Series Navigator (if installed) per table C-6.

Table C-6 GTN Series Navigators

AXIS Configuration Settings	Interfacing Equipment Configuration Settings
AXIS GTN MODIFICATION PAGE	**GTN SETUP > RS-232 CONFIGURATION PAGE**
GTN System ID: GTN 1 or GTN 2 [1]	
RS-232 MAPMX Port: [6]	RS-232 Port “#” Input/Output: MAPMX Format 2
RS-232 Connext Port: [6] [7]	RS-232 Port “#” Input/Output: CONNEXT Format 2
	GTN SETUP > ARINC 429 CONFIGURATION PAGE
ARINC 429 GPS Input Port: [2]	ARINC 429 Out “#”: GARMIN 429, Low Speed
ARINC 429 EFIS Output Port: [2]	ARINC 429 In “#”: GDU FORMAT 2, Low Speed
ARINC 429 EFIS Output Port SDI: LNAV 1 or LNAV 2 [4]	SDI: LNAV 1 or LNAV 2 [3]
	GTN SETUP > VOR/LOC/GS CONFIGURATION PAGE
ARINC 429 NAV Input Port: [2] [5]	NAV Radio: Enabled [5]
	TX Speed: Low Speed [5]
	SDI: VOR/ILS 1 OR VOR/ILS 2 [3]
	GTN SETUP > MAIN INDICATOR (ANALOG) CONFIGURATION PAGE
	Selected Course for VLOC: Allowed [5]
	CDI Key: Enabled is allowed and must be set on both GTN Xis, if present [5]
	GTN SETUP > MAIN SYSTEM CONFIGURATION PAGE
	Crossfill Status Alert: Disabled
	External Flight Plan: Enabled

[1] The selected System ID value results in the interfaced GTN being assigned GPS1/NAV1/COM1 or GPS2/NAV2/COM2 in the AXIS system, as applicable. This selection also dictates what ARINC 429 SDI the AXIS system expects for ARINC 429 outputs from the specified GTN.

[2] The GDU will consume GTN Series Navigator ARINC 429 data using any available ARINC 429 port in the system (GAD 29, GSU 73, GDU 116 Connector J1013). A G5 in the system can only receive ARINC 429 data from a GTN Series Navigator, via GAD 29 or GSU 73. In the case of a GDU failure, all 429 data will be unavailable to other displays in the system if GDU 116 connector J1013 is used for ARINC 429 I/O. GAD 29 and GSU 73 provide ARINC 429 data to all displays in the system via CAN.

[3] SDI must match the value of the GTN System ID selected on the AXIS Modification page.

[4] Must match the SDI value selected in the GTN ARINC 429 Configuration page.

[5] Not applicable to GTN 625Xi, 635Xi, 725Xi or 735Xi.

[6] Use any available RS-232 port on any AXIS flight display in the system.

[7] Optional connection. Only connect to Navigator 1, in a dual external navigator installation.

C.5 GNS Series Navigators

Configure the AXIS flight display and each interfaced GPS 400W, GNC 420W, GNS 430W, GPS 500W, or GNS 530W Series Navigator (if installed) per table C-7.

Table C-7 GNS Series Navigators

AXIS Configuration Settings	Interfacing Equipment Configuration Settings
AXIS GNS MODIFICATION PAGE	
GNS System ID: GNS 1 or GNS 2 [1]	
	GNS MAIN RS-232 CONFIGURATION PAGE
RS-232 MAPMX Port: [6]	CHNL 1*: Off/MAPMX
RS-232 Connext Port: [6] [7]	CHNL 2*: Connext/Connext
	GNS MAIN ARINC 429 CONFIGURATION PAGE
ARINC 429 GPS Input Port: [2]	OUT: GAMA 429, Low Speed
ARINC 429 EFIS Output Port: [2]	IN 1: EFIS/Air Data, Low Speed
ARINC 429 EFIS Output Port SDI: EFIS 1 or EFIS 2 [4]	SDI: LNAV 1 or LNAV 2 [3]
	VNAV: Enable Labels
	GNS VOR/LOC/GS ARINC 429 CONFIGURATION
ARINC 429 NAV Input Port: [2] [5]	SPEED: Low/Low [5]
	SDI: VOR/ILS 1 or VOR/ILS 2 [3] [5]
	GNS MAIN CDI/OBS CONFIGURATION PAGE
	Press Menu and select “Ignore SEL CRS for VLOC?” [5]

[1] The selected System ID value results in the interfaced GNS being assigned GPS1/NAV1 or GPS2/NAV2 in the AXIS system, as applicable. This selection also dictates what ARINC 429 SDI the AXIS system expects for ARINC 429 outputs from the specified GNS.

[2] The GDU will consume GNS Series Navigator ARINC 429 data using any available ARINC 429 port in the system (GAD 29, GSU 73, GDU 116 Connector J1013). A G5 in the system can only receive ARINC 429 data from a GNS Navigator, via GAD 29 or GSU 73. In the case of a GDU failure, all 429 data will be unavailable to other displays in the system if GDU 116 connector J1013 is used for ARINC 429 I/O. GAD 29 and GSU 73 provide ARINC 429 data to all displays in the system via CAN.

[3] SDI must match the value of the GNS System ID selected on the AXIS Modification page.

[4] Must match the SDI value selected in the GNS ARINC 429 Configuration page.

[5] Not applicable to GNC420W, GPS 400W, GPS 500W

[6] Use any available RS-232 Port on any AXIS Flight display in the system

[7] Optional connection. Only connect to Navigator 1, in a dual external navigator installation.

*Use any available RS-232 port on the GNS Navigator

C.6 GNS 480 Navigator

Configure the AXIS flight display and interfaced GNS 480 Navigator (if installed) per table C-8.

Table C-8 GNS 480 Navigator

AXIS Configuration Settings	Interfacing Equipment Configuration Settings
AXIS GNS 480 MODIFICATION PAGE	
GNS System ID: GNS 1 or GNS 2 [1]	
	GNS SETUP MENU > SERIAL PORTS CONFIGURATION PAGE
RS-232 MAPMX Port: [5]	CHNL 1 TX*: Off/MAPMX
	GNS SETUP MENU > 429 PORTS CONFIGURATION PAGE
ARINC 429 GPS Input Port: [2]	CH_OUT 1: GAMA 429, Low Speed, SYS 1 or SYS 2 [3]
ARINC 429 EFIS Output Port: [2]	CH_IN 2: EFIS, Low Speed, SYS 1 or SYS 2 [3]
ARINC 429 EFIS Output Port SDI: LNAV 1 or LNAV 2 [4]	
ARINC 429 NAV Input Port: [2]	CH_OUT 2: VOR/ILS, Low Speed, SYS 1 or SYS 2 [3]
	GNS SETUP MENU > RESOLVER
	Resolver: Not Installed
	GNS MENU > MISC
	CDI Select: Use

[1] The selected System ID value results in the interfaced GNS being assigned GPS1/NAV1 or GPS2/NAV2 in the AXIS system, as applicable. This selection also dictates what ARINC 429 SDI the AXIS system expects for ARINC 429 outputs from the specified GNS.

[2] The GDU 116 will consume GNS 480 Navigator ARINC 429 data using any available ARINC 429 port in the system (GAD 29, GSU 73, GDU 116 Connector J1013). A G5 in the system can only receive ARINC 429 data from a GNS 480, via GAD 29 or GSU 73. In the case of a GDU failure, all 429 data will be unavailable to other displays in the system if GDU 116 connector J1013 is used for ARINC 429 I/O. GAD 29 and GSU 73 provide ARINC 429 data to all displays in the system via CAN.

[3] SDI must match the value of the GNS System ID selected on the AXIS modification page.

[4] Must match the SDI value selected in the GNS ARINC 429 configuration page.

[5] Use any available RS-232 Port on any AXIS flight display in the system.

C.7 COM

C.7.1 GTR 200(B)

Configure the AXIS flight display and interfaced GTR 200(B) (if installed) per table C-9.

Table C-9 GTR 200(B)

AXIS Configuration Settings	Interfacing Equipment Configuration Settings
AXIS GTR 200(B) MODIFICATION PAGE	
GTR System ID: 1 or 2 [1] [2]	
	GTR 200(B)AUDIO SETUP CONFIGURATION PAGE
	Internal Intercom: Enabled or Disabled [3]

[1] GTR System ID must match the ID Pin strapping on the GTR 200(B) connector. The GTR 200(B) uses physical pins in the unit connector to establish LRU identity.

[2] The selected System ID Value assigns the GTR radio as COM1 or COM2 in the AXIS system.

[3] Enable internal intercom if no audio panel device exists in the system, and the internal intercom of the specified GTR Radio is used as the intercom device for the aircraft.

C.7.2 GTR 20

Configure the AXIS flight display and interfaced GTR 20 per table C-10.

Table C-10 GTR 20

AXIS Configuration Settings	Interfacing Equipment Configuration Settings
AXIS GTR 20 MODIFICATION PAGE	**GTR 20 Unit Wiring [1]**
GTR System ID: 1 or 2 [2] [3] Internal Intercom: Enabled or Disabled [4]	Strap ID pins to identify radios as #1 or #2 [2]

[1] The GTR 20 uses physical pins in the unit connector to establish LRU identity.

[2] GTR System ID must match the ID Pin strapping on the GTR 20 connector.

[3] The selected System ID Value assigns the GTR radio as COM1 or COM2 in the AXIS system

[4] Enable internal intercom if no audio panel device exists in the system, and the internal intercom of the specified GTR Radio is used as the intercom device for the aircraft.

C.7.3 GTR 205(x)

Configure the AXIS flight display and interfaced GTR 205(x) transponder (if installed) per table C-11 and table C-12.

Table C-11 GTR 205(x) HSDB/CAN (Recommended)

AXIS Configuration Settings	Interfacing Equipment Configuration Settings
AXIS GTR 205(x) MODIFICATION PAGE	**GTR UNIT SETUP CONFIGURATION PAGE**
GTR System ID: GTR 1 or GTR 2 [1] GTR Connection Type: HSDB or CAN	Unit ID: GTR 1 or GTR 2 [1]
	GTR UNIT SETUP > ICS AUDIO CONFIGURATION PAGE
	Internal Intercom: Enabled or Disabled [2]

[1] GTR System ID must match on both AXIS modification page and GTR Unit Setup configuration menu. The selected value results in the interfaced GTR being assigned COM1 or COM2 in the AXIS system.

[2] Set to enabled if the GTR 205(x) will serve as the Intercom Audio system in the aircraft. Disable if an Audio panel exists in the installation, or audio panel is enabled on an AXIS C or NC display unit.

Table C-12 GTR 205(x) Serial

AXIS Configuration Settings	Interfacing Equipment Configuration Settings
AXIS GTR 205(x) MODIFICATION PAGE	**GTR RS-232 CONFIGURATION PAGE**
GTR System ID: GTR 1 or GTR 2 [3] GTR Connection Type: Serial Garmin VHF COM RS-232 Port: [4]	Format NMEA 1
	GTR UNIT SETUP > ICS AUDIO CONFIGURATION PAGE
	Internal Intercom: Enabled or Disabled [5]

[3] The selected System ID Value assigns the GTR radio as COM1 or COM2 in the AXIS system.

[4] Use any available RS-232 Port on any AXIS Flight display in the system.

[5] GTR 205(x) radios connected via RS-232 do not integrate the intercom function of the GTR with the AXIS display.

C.7.4 GTR 205R(x)

Configure the AXIS flight display and interfaced GTR 205R(x) (if installed) per table C-13.

Table C-13 GTR 205R(x)

AXIS Configuration Settings	Interfacing Equipment Configuration Settings
AXIS GTR 205R(x) MODIFICATION PAGE	**GTR 205R(x) Unit Wiring [1]**
GTR System ID: GTR 1 or GTR 2 [2]	Strap ID pins to identify radio as #1 or #2
GTR Connection Type: HSDB or CAN Internal Intercom: Enabled or Disabled	

[1] The GTR 205R(x) uses physical pins in the unit connector to establish LRU identity.

[2] GTR System ID must match the ID Pin strapping on the GTR R(x) connector.

[3] Set to enabled if the GTR R(x) will serve as the Intercom Audio system in the aircraft. Disable if an Audio panel exists in the installation, or audio panel is enabled on an AXIS C or NC display unit.

C.7.5 GTR 225

Configure the AXIS flight display and interfaced GTR 225 Radio (if installed) per table C-14.

Table C-14 GTR 225

AXIS Configuration Settings	Interfacing Equipment Configuration Settings
AXIS GTR 225 MODIFICATION PAGE	**GTR 225 SYS CONFIGURATION PAGE**
GTR System ID: GTR 1 or GTR 2 [1] RS-232 Garmin VHF COM Port: [2]	Serial Port I/O Mode: NMEA

[1] The selected System ID Value assigns the GTR radio present on the specified AXIS RS-232 port as COM1 or COM2 in the AXIS system.

[2] Use any available RS-232 Port on any AXIS Flight display in the system.

C.7.6 SL 40

Configure the AXIS flight display and interfaced SL 40 per table C-15.

Table C-15 SL 40

AXIS Configuration Settings	Interfacing Equipment Configuration Settings
AXIS SL 40 MODIFICATION PAGE	No further configuration required.
SL 40 System ID: 1 or 2 [1] RS-232 Garmin VHF COM Serial Port: [2]	

[1] The selected System ID value assigns the SL40 radio as COM1 or COM2 in the AXIS system.

[2] Use any available RS-232 port on any AXIS Flight display in the system.

C.8 NAV/COM

C.8.1 SL 30

Configure the AXIS flight display and interfaced SL 30 per table C-16.

Table C-16 SL 30

AXIS Configuration Settings	Interfacing Equipment Configuration Settings
AXIS SL 30 MODIFICATION PAGE	
SL 30 System ID: SL 1 or SL 2 [1] RS-232 VHF NAV/COM Port: [2]	
	SL 30 NAV SETUP PAGE
	Indicator Head Type: Serial

[1] The selected System ID value assigns the SL30 radio as NAV1/COM1 or NAV2/COM2 in the AXIS system.

[2] Use any available RS-232 Port on any AXIS flight display in the system.

C.8.2 GNC 255

Configure the AXIS flight display and interfaced GNC 255 per table C-17.

Table C-17 GNC 255

AXIS Configuration Settings	Interfacing Equipment Configuration Settings
AXIS GNC MODIFICATION PAGE	**GNC 255 SYS CONFIGURATION PAGE**
GNC System ID: GNC 1 or GNC 2 [1] RS-232 VHF NAV/COM Port: [2]	Serial Port I/O Mode: NMEA
	GNC 255 NAV CONFIGURATION PAGE
ARINC NAV Input Port: [3] [4]	SDI: VOR/ILS 1 or VOR/ILS 2 [4] [5] TX: Low Speed [4] CDI Indicator Type: Serial

[1] The selected System ID value assigns the GNC 255 radio as NAV1/COM1 or NAV2/COM2 in the AXIS system. This selection also dictates what ARINC 429 SDI the AXIS system expects for ARINC 429 outputs from the specified GNC Radio.

[2] Use any available RS-232 Port on any AXIS Flight display in the system.

[3] The GDU 116 will consume GNC 255 Navigator ARINC 429 data using any available ARINC 429 port in the system (GAD 29, GSU 73, GDU 116 Connector J1013). A G5 in the system can only receive ARINC 429 data from a GNC 255, via GAD 29 or GSU 73. In the case of a GDU failure, all 429 data will be unavailable to other displays in the system if GDU 116 connector J1013 is used for ARINC 429 I/O. GAD 29 and GSU 73 provide ARINC 429 data to all displays in the system via CAN.

[4] The ARINC 429 connection between the GNC 255 and AXIS display is an optional connection.

[5] SDI must match the value of the GNC System ID selected on the AXIS Modification page.

C.8.3 GNC 215

Configure the AXIS flight display and interfaced GNC 215 NAV/COM (if installed) per table C-18 and table C-19, depending on the wiring method used to connect the GNC 215 to the AXIS system.

Table C-18 GNC 215 HSDB Option (Recommended)

AXIS Configuration Settings	Interfacing Equipment Configuration Settings
AXIS GNC 215 MODIFICATION PAGE	**GNC 215 UNIT SETUP > UNIT ID PAGE**
GNC System ID: GNC 1 or GNC 2 [1] GNC Connection Type: HSDB	Unit ID: GNC 1 or GNC 2 [1]
	GNC 215 INTERFACES > HSDB PAGE
	GPS Navigator: Enabled or Disabled [2] GDU: Enabled GI 275: Enabled or Disabled [3]
	GNC 215 UNIT SETUP > NAV PAGE
	Filtered LOC/GS: Disabled Composite Indicator: Enabled or Disabled
	GNC 215 UNIT SETUP > INTERCOM PAGE
	Intercom: External

[1] GNC System ID must match on both AXIS modification page and GNC Unit Setup configuration menu. The selected value results in the interfaced GNC being assigned NAV/COM1 or NAV/COM2 in the AXIS system. The value of this selection also dictates what ARINC 429 SDI the AXIS system expects for the ARINC 429 output from the specified GNC Radio.

[2] Enable GPS Navigator if a GDU 116C and/or GDU 116NC is installed or if another HSDB-capable GPS source is present on the HSDB network.

[3] Enable GI 275 if a GI 275 standby flight display is installed.The ARINC 429 connection between the GNC 215 and AXIS display is an optional connection.

[4] The ARINC 429 connection between the GNC 215 and AXIS display is an optional connection.

[5] Optional backup path to provide NAV Data to a connected G5 in the system. A G5 in the system can only receive ARINC 429 data from a GNC 215, via GAD 29 or GSU 73. Use any available port present on a GAD 29 or GSU 73.

Table C-19 GNC 215 Serial Option

AXIS Configuration Settings	Interfacing Equipment Configuration Settings
AXIS GNC 215 MODIFICATION PAGE	**GNC 215 UNIT SETUP > UNIT ID PAGE**
GNC System ID: GNC 1 or GNC 2 [1] [2]	Unit ID: GNC 1 or GNC 2 [1]
	GNC 215 INTERFACES > RS-232 PAGE
GNC Connection Type: Serial RS-232 Garmin VHF NAV/COM Port: [4]	Format: NMEA 1
	GNC 215 INTERFACES > ARINC 429 PAGE
ARINC 429 NAV Input Port: [3] [5]	SDI: Use Unit ID Speed: Low Speed
	GNC 215 UNIT SETUP > NAV PAGE
	Filtered LOC/GS: Disabled Composite Indicator: Enabled or Disabled
	GNC 215 UNIT SETUP > INTERCOM PAGE
	Intercom: External

[1] GNC System ID must match on both AXIS modification page and GNC Unit Setup configuration menu. The selected value results in the interfaced GNC being assigned NAV/COM1 or NAV/COM2 in the AXIS system.

[2] The value of this selection dictates what ARINC 429 SDI the AXIS system expects for the ARINC 429 output from the specified GNC Radio.

[3] Enable GI 275 if a GI 275 standby flight display is installed.

[4] The ARINC 429 connection between the GNC 215 and AXIS display is an optional connection.

[5] Optional backup path to provide NAV Data to a connected G5 in the system. A G5 in the system can only receive ARINC 429 data from a GNC 215, via GAD 29 or GSU 73. Use any available port present on a GAD 29 or GSU 73.

C.9 Transponders

C.9.1 GTX 345/345D

Configure the AXIS flight display and interfaced GTX 345/345D transponder (if installed) per table C-20 or table C-21, depending on the wiring method used to connect the transponder to the AXIS system.

Table C-20 GTX 345/345D HSDB Option (Recommended)

AXIS Configuration Settings	Interfacing Equipment Configuration Settings
AXIS GTX 345(D) MODIFICATION PAGE	**GTX 345(D) HSDB INTERFACE CONFIGURATION PAGE**
GTX Connection Type: HSDB	HSDB Interface: Display 1 Present: Yes
	GTX 345(D) SENSORS CONFIGURATION PAGE
	GPS 1 SRC: GIA/GPS 1 [1]

[1] Configure the GPS source only if a GDU 116C/NC is providing GPS data to the transponder.

Table C-21 GTX 345/345D Serial Option

AXIS Configuration Settings	Interfacing Equipment Configuration Settings
AXIS 345(D) MODIFICATION PAGE	**GTX 345(D) RS-232 INTERFACE CONFIGURATION PAGE**
GTX Connection Type: Serial RS-232 Connext Port: [1] RS-232 Port Format: Connext FMT 4 [2]	RS-232 Port '#' (Connected to GDU for Connext WX/TFC) Input/Output: Connext FMT 4 [2] RS-232 Port 1 (Connected to GSU 25) Input/Output Format: XPDR FMT 1
	GTX 345(D) SENSORS CONFIGURATION PAGE
	GPS 1 SRC: RS-232 Port 1 [3]

[1] Use any available RS-232 port on any AXIS flight display in the system.

[2] Connext format must match on both the transponder settings configuration page in configuration mode of the interfacing transponder, and the GTX 345R(D) modification page in configuration mode of the AXIS display.

[3] Configure the GPS source only if a GDU 116C/NC is providing GPS data to the transponder.

C.9.2 GTX 345R/345DR/45R

Configure the AXIS flight display and interfaced GTX 345R/345DR transponder (if installed) per table C-22 and table C-23, depending on the wiring method used to connect the transponder to the AXIS system.

Table C-22 GTX 345R/345DR/45R HSDB Option (Recommended)

AXIS Configuration Settings	Interfacing Equipment Configuration Settings
AXIS GTX 345R(D) MODIFICATION PAGE	No further configuration required.
GTX Connection Type: HSDB	

Table C-23 GTX 345R/345DR/45R Serial Option

AXIS Configuration Settings	Interfacing Equipment Configuration Settings
AXIS GTX 345R(D) MODIFICATION PAGE	**AXIS TRANSPONDER CONFIGURATION PAGE [1]**
GTX Connection Type: Serial RS-232 Connext Port: [2] RS-232 Port Format: Connext FMT 4 [3]	Select CONNEXT FMT 4 for RS-232 port connected to GDU for TFC/WX. [3]

[1] For remote transponders, configuration of the serial ports of the interfacing transponder is accomplished through AXIS configuration mode, using the dedicated Transponder tab in the Settings Application.

[2] Use any available RS-232 Port on any AXIS flight display in the system.

[3] Connext format must match on both the Transponder Settings configuration tab in the Settings Application in configuration mode of the AXIS display, and the GTX 345R(D) modification page in Devices application of configuration mode of the AXIS display.

C.9.3 GNX 375

Refer to section C.2.3 for GNX 375 interface configuration information.

C.9.4 GTX 327/328/330/330ES

Configure the GTX 327/328/330/330ES as follows for interface to the AXIS flight display system per table C-24. No further AXIS specific configuration is required to establish the interface between the two units.

Table C-24 GTX 327/328/330/330ES

Interfacing Equipment Configuration Settings
GTX 327 or GTX 328 or GTX 330 or GTX 330ES OPERATION CONFIGURATION PAGE > SECOND CONFIGURATION PAGE
Set “Squat Switch?” to No
GTX 327 or GTX 328 or GTX 330 or GTX 330ES RS-232 CONFIGURATION PAGE
Set RS-232 Port # Input to Remote [1]
Set RS-232 Port # Output to Remote +TIS [1]

[1] Use any available GTX Transponder RS-232 port to connect to Port 3 of a GSU 25.

C.9.5 GTX 325/335/335D

Configure the GTX 325, 335 or 335D as follows for interface to the AXIS flight display system per table C-25. No further AXIS specific configuration is required to establish the interface between the two units.

Table C-25 GTX 325/335/335D

Interfacing Equipment Configuration Settings
GTX 325 or GTX 335 or GTX 335D CONFIGURATION MODE [1] > RS-232 CONFIGURATION PAGE
Set RS-232 Port # Input to XPDR FMT 1[2]
Set RS-232 Port # Output to XPDR FMT 1 [2]

[1] Hold ON/ENT keys on power up to enter configuration mode.

[2] Use any available GTX Transponder RS-232 port to connect to Port 3 of a GSU 25.

C.9.6 GTX 35R/335R/335DR

No additional interface configuration is required for the AXIS system to communicate with GTX 35R, GTX 335R, or 35DR transponders.

C.10 Aircraft Batteries

C.10.1 True Blue Battery

Table C-26 True Blue Battery Settings

AXIS Configuration Settings	Interfacing Equipment Configuration Settings
AXIS TRUE BLUE BATTERY MODIFICATION PAGE	No further configuration required.
RS-232 Port Selection: [1] Maximum Voltage: 12v or 24v	

[1] Use any available RS-232 port on any AXIS flight display in the system.

C.10.2 EarthX Battery

Table C-27 EarthX Battery Settings

AXIS Configuration Settings	Interfacing Equipment Configuration Settings
AXIS EARTHX BATTERY MODIFICATION PAGE	No further configuration required.
RS-232 Port Selection: [1] Maximum Voltage: 12v or 24v	

[1] Use any available RS-232 port on any AXIS flight display in the system.

C.11 Engine Sensor Applications

C.11.1 Lycoming/Continental Engine Applications

The Garmin sensor kits available for AXIS flight display installations with 4-cylinder and 6-cylinder Lycoming and Continental piston engines are listed in table C-28 and table C-29. Refer to appendix B for sensor wiring guidance.

Table C-28 Contents of AXIS Flight Display Sensor Kit, 4 Cylinder Lycoming/Continental

Item	Garmin P/N	Quantity
Garmin GPT 150G	011-05783-30	1
Fuel Flow Transducer, EI FT-60	494-10001-00	1
Absolute Pressure Transducer, Kavlico 30 PSI	011-05783-00	1
Type K Thermocouple, 3/8-24 Threaded, CHT, Alcor 86253	494-70000-00	4
Type K Thermocouple, Clamp, EGT, Alcor 86255	494-70001-00	4
RTD, Oil Temperature, UMA 1B3-2.5R	494-70004-00	1
Shunt, Ammeter, +/-50 mV, 100 amps, UMA 1C4	909-D0000-00	1

(K00-00512-10)

Table C-29 Contents of AXIS Flight Display Sensor Kit, 6 Cylinder Lycoming/Continental

Item	Garmin P/N	Quantity
Garmin GPT 150G	011-05783-30	1
Fuel Flow Transducer, EI FT-60	494-10001-00	1
Absolute Pressure Transducer, Kavlico 30 PSI	011-05783-00	1
Type K Thermocouple, 3/8-24 Threaded, CHT, Alcor 86253	494-70000-00	6
Type K Thermocouple, Clamp, EGT, Alcor 86255	494-70001-00	6
RTD, Oil Temperature, UMA 1B3-2.5R	494-70004-00	1
Shunt, Ammeter, +/-50 mV, 100 Amps, UMA 1C4	909-D0000-00	1

(K00-00513-10)

For 8-cylinder Lycoming engine applications, refer to section C.11.5.

For retrofit applications, where an AXIS flight display system is installed in a completed aircraft with a Lycoming/Continental engine, refer to section C.11.6.

C.11.1.1 Lycoming/Continental RPM

Engine speed for Lycoming and Continental engines may be sensed by an RPM sensor mounted on the mechanical tach drive, a sensor mounted on the magneto, or through the digital tach signal output from an electronic ignition system.

C.11.1.2 Lycoming/Continental Fuel Pressure

Fuel pressure sensors for Lycoming and Continental engines are not included in the Garmin sensor kits, due to differences between pressure ranges for carbureted and fuel-injected engines. For monitoring Lycoming/Continental engine fuel pressure, select a sensor from table C-28 as appropriate:

- Fuel-injected engines typically use the Garmin GPT 75G sensor (0-75 psiG, Garmin P/N 011-5783-20).
- Carbureted engines typically use the Garmin GPT 15G sensor (0-15 psiG, Garmin P/N 011-05783-10)

NOTE

Lycoming EIS display ranges are typically set to correspond with the pressure at the inlet to the fuel injector. Continental EIS display ranges are typically set to correspond to unmetered fuel pressure values.

C.11.1.3 Lycoming iE2

The AXIS flight display system is capable of monitoring the following engine parameters from the Lycoming iE2 FADEC digital interface, when connected to a GEA 24 engine interface module:

- RPM
- Manifold pressure
- Oil pressure
- Oil temperature
- Exhaust gas temperature
- Cylinder head temperature
- Turbine inlet temperature
- Fuel pressure
- ECU bus voltage

C.11.2 Rotax Engine Applications

Refer to appendix B Sensor Interface drawings for all Rotax engine applications.

C.11.2.1 Rotax 912

The Garmin sensor kits available for AXIS flight display installations with Rotax 912 engines are listed in table C-30.

Table C-30 Contents of AXIS Flight Display Sensor Kit, Rotax 912 (P/N K00-00514-10)

Item	Garmin P/N	Quantity
AXIS flight display External Components for Rotax 912 RPM Signal (refer to table C-31)	011-02348-00	1
Garmin GPT 15G	011-05783-10	1
Absolute Pressure Transducer, Kavlico 30 PSI	011-05783-00	1
Type K Thermocouple, Clamp, EGT, Alcor 86255	494-70001-00	2
Shunt, Ammeter, +/-50 mV, 100 Amps, UMA 1C4	909-D0000-00	1

Rotax engine RPM is sensed through a connection to the engine trigger coil. The external components required for use with the GSU 73 (refer to appendix B) are listed in table C-31.

Table C-31 Contents of AXIS Flight Display External Components for Rotax 912 RPM Signal Kit (P/N 011-02348-00)

Item	Garmin P/N	Quantity
Silicon Diode, 1A, 200V	680-00006-D0	2
7.5 V Zener Diode	682-00012-00	1
300 Ω Resistor, 1%, 0.5 W	902-A300R-F0	2

C.11.2.2 Rotax 914

The sensors used for AXIS flight display installations with Rotax 914 engines are listed in table C-32. Order all sensors in the Rotax 912 sensor kit except the fuel pressure sensor. Instead, use the UMA 1EU07D differential fuel pressure sensor.

Table C-32 Rotax 914 Sensors

Sensor Type	Details/Part Number
RPM	Use Rotax tachometer output along with external components from 011-02348-00 kit
Manifold pressure	Use Garmin GPT 30A (011-05783-00)
Oil pressure	Use Rotax-supplied sensor
Oil temperature	Use Rotax-supplied thermistor
Exhaust gas temperature	Use Type K thermocouple (494-70001-00)
Cylinder head temperature	Use Rotax-supplied thermistor
Fuel pressure	Use UMA 1EU07D differential fuel pressure sensor
Fuel flow	Use EI FT-60 (494-10001-00) or Floscan 201B-6

C.11.2.3 Rotax 912iS/915iS/916iS

The AXIS flight display system is capable of monitoring the following engine parameters from the Rotax 912iS/915iS/916iS FADEC digital interface, when connected to the dedicated FADEC CAN interface on a GEA 24:

- RPM
- Manifold pressure
- Manifold air temperature
- Oil pressure
- Oil temperature
- Exhaust gas temperature
- Coolant temperature
- Fuel flow
- ECU bus voltage
- Throttle position
- Percent Power (Rotax 915iS and 916iS only)

Refer to appendix B for GEA 24 to Rotax FADEC wiring information.

The GEA 24B (P/N 010-02770-00) is capable of dual CAN connections to the Rotax FADEC. This provides greater communication redundancy with the Rotax ECU. Refer to appendix B for GEA 24B to Rotax FADEC wiring information. The wiring method represented in appendix B remains compatible with the GEA 24B.

Fuel pressure for Rotax FADEC engines may be monitored using one of the two following methods:

- Use UMA 1EU70D differential sensor for fuel pressure.
- With an AXIS system, select an appropriate fuel pressure sensor from table C-40 as appropriate, and configure the sensor to display fuel pressure relative to manifold pressure (refer to section 5).

Refer to section C.11.10 for information about FADEC engine status display.

C.11.3 Jabiru Engine Applications

The sensors used in AXIS flight display installations with Jabiru engines are listed in table C-33. Refer to appendix B for Jabiru engine sensor wiring information.

Table C-33 Jabiru Sensors

Sensor Type	Details/Part Number
RPM	Use Jabiru tachometer output from alternator
Manifold pressure	Use Garmin GPT 30A (011-05783-00)
Oil pressure	Use Jabiru-supplied VDO pressure sensor, or 150 GPT
Oil temperature	Use Jabiru-supplied VDO 50-150°C thermistor, or any compatible RTD such as UMA 1B3XR series
Exhaust gas temperature	Use Jabiru-supplied Type K thermocouples
Cylinder head temperature	Use Jabiru-supplied Type J thermocouples
Fuel pressure	Use Garmin GPT 15G (011-05783-10)
Fuel flow	Use EI FT-60 (494-10001-00) or Floscan 201B-6

C.11.4 UL Power Engine Applications

The AXIS flight display system is capable of monitoring the following engine parameters from the UL Power FADEC digital interface, when connected to the dedicated FADEC CAN interface on a GEA 24:

- RPM
- Manifold pressure
- Oil pressure
- Oil temperature
- Cylinder head temperature
- Exhaust gas temperature
- Fuel pressure
- Fuel flow
- ECU bus voltage

Refer to section C.11.10 for information about FADEC engine status display.

For UL Power engine installations that do not support a digital interface to the GEA 24, the engine sensors shown in table C-34 may be used.

Table C-34 UL Power Sensors

Sensor Type	Details/Part Number
RPM	Use ECU tachometer output and select "Electronic Ignition (2 pulses/revolution)”
Manifold pressure	Garmin GPT 30A (011-05783-00
Oil Pressure	Garmin GPT 150G (011-05783-30)
Oil temperature	UMA 1B3-2.5R RTD (494-70004-00)
Exhaust gas temperature	Type K thermocouples
Cylinder head temperature	Type K thermocouples
Fuel Pressure	Garmin GPT 75G (011-05783-20)
Fuel flow	Use ECU fuel consumption pulse output and select “Custom” fuel flow configuration. UL Power specifies a pulse frequency of 170 Hz at 72 L/hour, which suggests an initial scale factor of 32176.

C.11.5 Other Piston Engine Applications

In addition to the engines described previously, the AXIS flight display system's engine/airframe inputs can be configured for use with a variety of other engine types.

Sensors for Other Piston Engines - Many other piston engines can be monitored using the supported engine sensors shown in table C-35.

Table C-35 Sensors for Other Piston Engines

Sensor Type	Details/Part Number
RPM	Use any supported sensor from table C-40, or select “Custom” configuration and enter frequency-to-RPM calibration.
Manifold pressure	Use any supported sensor from table C-40, or select “Custom” configuration and enter voltage-to-pressure calibration.
Oil pressure	Use any supported sensor from table C-40, or select “Custom” configuration and enter voltage-to-pressure calibration
Oil temperature	Use any supported sensor from table C-40
Exhaust gas temperature	Use Type K thermocouples. Up to 6 cylinders are supported, or up to 12 cylinders in an AXIS system with dual GEA 24 EIS units.
Cylinder head temperature	Use Type J or Type K thermocouples. Up to 6 cylinders are supported, or up to 12 cylinders in an AXIS system with dual GEA 24 EIS units.
Turbine inlet temperature	Use Type K thermocouples
Carburetor temperature	Use any supported sensor from table C-40
Fuel pressure	Use any supported sensor from table C-40, or select “Custom” configuration and enter voltage-to-pressure calibration
Fuel flow	Use any supported sensor from table C-40, or select “Custom” configuration and enter pulses-per-gallon calibration
Coolant pressure	Use any supported sensor from table C-40, or select “Custom” configuration and enter voltage-to-pressure calibration
Coolant temperature (or other temperature)	Use “Custom” temperature configuration with RTD, thermistor, or thermocouple
Hydraulic pressure (or other pressure)	Use appropriate Garmin pressure sensor or select “Custom” configuration and enter voltage-to-pressure calibration
Other parameters	Use any supported sensor from table C-40

Large Piston Engines - An AXIS system with dual GEA 24 EIS units installed can monitor a single engine with up to 12 cylinders, including radial engines. For large single-engine applications, cylinders 1-6 are connected to GEA 24 #1 and cylinders 7-12 are connected to GEA 24 #2.

Twin Piston Engines - An AXIS system with dual GEA 24 EIS units installed can monitor twin piston engines with up to 6 cylinders each (Refer to section C.11.8).

C.11.6 Retrofit Engine Applications

When installing an AXIS flight display system in a completed aircraft with a typical piston engine, it is generally possible to reuse a number of the existing engine sensors that may already be present, as shown in table C-36.

Consult appendix B for general engine sensor wiring guidance that can be applied to existing sensors.

Table C-36 Retrofit Engine Sensors

Sensor Type	Notes on Suitability for Reuse
RPM	Sensors that provide a digital output signal can be used without modification, if calibration characteristics are known. Only connect AXIS flight display RPM inputs directly to magneto P-Leads on MOD Level 2 GEA 24 units.
Manifold Pressure	Sensors that provide a voltage output can be used without modification, if calibration characteristics are known. Sensors that provide a resistance or current output may require replacement with a supported sensor (e.g. 011-05783-00).
Oil Pressure	Sensors that provide a voltage output can be used without modification, if calibration characteristics are known. Sensors that provide a resistance or current output may require replacement with a supported sensor (e.g. 011-05783-30).
Oil Temperature	Existing sensors are generally likely to require replacement with a supported sensor (e.g. 494-70004-00).
Exhaust Gas Temperature	Type K thermocouples can be used without modification. The GEA 24 J242 connector matches the pinout used by certain other engine monitoring systems.
Cylinder Head Temperature	Type J or K thermocouples can be used without modification. The GEA 24 J242 connector matches the pinout used by certain other engine monitoring systems.
Turbine Inlet Temperature	Type K thermocouples can be used without modification.
Fuel Pressure	Sensors that provide a voltage output can be used without modification, if calibration characteristics are known. Sensors that provide a resistance or current output may require replacement with a supported sensor (e.g. 494-30004-02 or 494-30004-03).
Fuel Flow	Most sensors that provide a digital output signal can be used without modification, if calibration characteristics are known. Many existing installations use Floscan or Electronics International fuel flow sensors that are directly supported by the AXIS flight display system.
Bus Current	Most shunt-type or Hall-effect sensors can be used without modification, if calibration characteristics are known.
Fuel Quantity	Most sensors that provide a resistance, voltage, or frequency output can be used without modification. New fuel quantity calibration will be performed during AXIS flight display system installation. For capacitive fuel quantity measurement, a third-party capacitance-to-frequency or capacitance-to-voltage converter is required; the AXIS flight display system does not support direct connection to capacitive fuel tank probes.

Table C-36 Retrofit Engine Sensors

Sensor Type	Notes on Suitability for Reuse
Control Surface Position	Most potentiometer-type sensors can be used without modification. New position calibration will be performed during AXIS flight display system installation.

C.11.7 Turbine Engine Applications

Turbine Engines - Many turbine engines can be monitored using the supported engine sensors shown in table C-37.

Table C-37 Sensors for Turbine Engines

Sensor Type	Details/Part Number
N1/N2 RPM	Two separate turbine engine RPM gauges can be displayed. Select “Custom” configuration for GEA 24 RPM1/RPM2 inputs and enter frequency-to-RPM calibration. A Sandia ST26 tachometer signal converter is typically required to provide proper digital signal conditioning.
Torque	Use Garmin GPT 150G (011-05783-30) for pressures under 150 PSI and enter pressure-to-torque calibration, or select “Custom” and enter voltage-to-torque calibration
Oil pressure	Use any supported sensor from table C-40, or select “Custom” configuration and enter voltage-to-pressure calibration
Oil temperature	Use any supported sensor from table C-40
Turbine inlet or outlet temperature	Use Type K thermocouple
Fuel pressure	Use supported Garmin or UMA pressure sensor, or select “Custom” configuration and enter voltage-to-pressure calibration
Fuel flow	Use any supported sensor from table C-40, or select “Custom” configuration and enter pulses-per-gallon calibration
Hydraulic pressure (or other pressure)	Use any supported sensor from table C-40, or select “Custom” configuration and enter voltage-to-pressure calibration
Other parameters	Use any supported sensor from table C-40

C.11.8 Twin-Engine Applications

An AXIS system using two GEA 24 units can monitor data from two engines with up to 6 cylinders each. Engine #1 is connected to GEA 24 #1, and engine #2 is connected to GEA 24 #2. Data from both engines is presented on the same GDU. Due to its larger display size, the GDU 46X is preferred over the GDU 45X or GDU 47X for twin-engine applications.

The two GEA 24s in a twin-engine installation use the same input configuration for analog and digital inputs, with a configuration choice to allow data for a particular input to be monitored from both GEA 24s, or from #1 only. The second GEA 24 may also be used to support additional discrete inputs. For information on configuring twin-engine sensor inputs, refer to section 4.4.8.

C.11.9 Rotorcraft Applications

Rotorcraft engine monitoring can be accomplished with an AXIS system, using the engine sensor application information in section C.11.1 through section C.11.7. Typically, the GEA 24 RPM 1 input is used to monitor rotor RPM.

Table C-38 Sensors for Rotorcraft Applications

Sensor Type	Details
Rotor RPM	Select “Custom” configuration for GEA 24 RPM1 input and enter frequency-to-RPM calibration. A Sandia ST26 tachometer signal converter may be required to provide proper digital signal conditioning.
Engine RPM	Select appropriate configuration for GEA 24 RPM 2 input as described in section C.11.1 through section C.11.7.
Other engine sensors	Select appropriate sensors and configuration as described in section C.11.1 through section C.11.7.

An AXIS system using two GEA 24 units can be used to monitor engine information for a twin-engine rotorcraft, as described in section C.11.8.

C.11.10 FADEC Engine Status

When used with a digital interface to a FADEC engine, FADEC status and maintenance information can be viewed in configuration mode or in normal mode from the Engine page Option Menu. To view FADEC status, access the configuration mode System Information page and highlight the FADEC item.

In normal mode, caution and warning indications from the FADEC interface are displayed in the form of CAS messages. Refer to the *AXIS Flight Display System Pilot’s Guide* (P/N 190-03167-00) for further information.

Table C-39 ROTAX FADEC CAS Alert Triggers

LANE A	LANE B	ENGINE CAS MESSAGE
OFF	Flashing	ENGINE ECU
Flashing	OFF	ENGINE ECU
Flashing	Flashing	ENGINE ECU
OFF	ON	ENGINE ECU
ON	OFF	ENGINE ECU
Flashing	ON	ENGINE ECU
ON	Flashing	ENGINE ECU
ON	ON	ENGINE ECU

White = advisory

Yellow = caution

Red = warning

C.12 EIS Sensors

The types of engine/airframe sensors that may be used for the various engine/airframe inputs are listed in table C-40. Many of these sensors are included in the Garmin AXIS avionics sensor kits (section C.11.1). Each of the sensors must be correctly installed and configured before use.

Table C-40 Compatible Engine/Airframe Input Sensors

SENSOR TYPE	COMPATIBLE SENSORS	GARMIN P/N*	NOTES
Bus Current	10-29 VDC input	N/A	
	Amploc KEY100 Hall effect sensor	N/A	+/- 100 A
	UMA 1C4 shunt	909-D0000-00	+/- 100 A
	Other ammeter shunt or Hall effect sensor types	N/A	Uses custom user-defined calibration (millivolts to amps)
Carburetor Temperature	Rotax 965531	N/A	
	Rotax 966385	N/A	
	50-150C Thermistor (e.g. VDO 320-XXX series)	N/A	
	Type K Thermocouple	N/A	
	MS28034/ MIL-T-7990 RTD	N/A	
	UMA 1B10R RTD	494-70005-00	UMA temperature sensors without the “R” designation are not compatible
Coolant Pressure	Garmin GPT 75G	011-05783-20	0-75 psiG
	Kavlico P4055-5020-3	N/A	0-75 psiG
	Any voltage-output pressure transducer	N/A	Uses custom user-defined calibration (voltage to pressure)
Custom Analog Parameter	Any voltage-output sensor	N/A	Uses custom user-defined sensor calibration
Custom Temperature	50-150C Thermistor (e.g. VDO 320-XXX series)	N/A	
	RTD (e.g. UMA 1B3XR series)	N/A	UMA temperature sensors without the “R” designation are not compatible
	Rotax 965531 (thermistor)	N/A	
	Rotax 966385 (thermistor)	N/A	
	Type J thermocouple	N/A	
	Type K thermocouple	N/A	
	MS28034 (MIL-T-7990 RTD)	N/A	

*Items with a Garmin part number may be included in an AXIS flight display sensor kit (section 1), and are available individually from Garmin dealers.

SENSOR TYPE	COMPATIBLE SENSORS	GARMIN P/N*	NOTES
Cylinder Head Temperature (CHT)	50-150C Thermistor (e.g. VDO 320-XXX series)	N/A	
	Type J thermocouple	N/A	
	Type K thermocouple (Alcor 86253)	494-70000-00	
	Type K Thermocouple (other)	N/A	
	Rotax 965531	N/A	
	Rotax 966385	N/A	
Discrete Inputs	Active High or Low: Canopy Warning, Gear Down Reminder, etc.	N/A	
Engine Torque	Garmin GPT 150G	011-05783-30	Uses custom user-defined calibration (0-150 psiG pressure to torque)
	Kavlico P4055-5020-4	N/A	Uses custom user-defined calibration (0-150 psiG pressure to torque)
	Any voltage-output torque transducer	N/A	Uses custom user-defined calibration (voltage to torque)
Exhaust Gas Temperature (EGT)	Type K thermocouple (Alcor 86255)	494-70001-00	
	Type K thermocouple (other)	N/A	
Fuel Flow (two sensors required for differential fuel flow)	EI FT-60	494-10001-00	0-70 gal/hr
	EI FT-90	N/A	0-125 gal/hr
	EI FT-180	N/A	0-250 gal/hr
	Floscan Series 200	N/A	0-60 gal/hr
	Floscan 231	N/A	0-90 gal/hr
	Any frequency-output fuel flow transducer	N/A	Uses custom user-defined calibration (0-5 kHz frequency to fuel flow)

*Items with a Garmin part number may be included in an AXIS flight display sensor kit (section 1), and are available individually from Garmin dealers.

SENSOR TYPE	COMPATIBLE SENSORS	GARMIN P/N*	NOTES
Fuel Pressure	Garmin GPT 15G	011-05783-10	0-15 psiG
	Kavlico P4055-5020-2	011-04202-10	0-15 psiG
	Garmin GPT 75G	011-05783-20	0-75 psiG
	Kavlico P4055-5020-3	N/A	0-75 psiG
	Kavlico P4055-75G	N/A	0-75 psiG
	UMA EU07D	N/A	0-7 psi differential
	UMA 1EU35G	N/A	0-35 psiG
	UMA 1EU70D	N/A	0-70 psi differential
	UMA 1EU70G	N/A	0-70 psiG
	UMA 1EM2K	N/A	0-2500 psiG
	Any voltage-output pressure sensor	N/A	Uses custom user-defined calibration (voltage to pressure)
Fuel Quantity	Any capacitive fuel quantity sensor (requires external conversion to voltage or frequency)	N/A	Uses custom user-defined calibration (voltage or frequency to fuel quantity)
	Any resistive fuel quantity sensor	N/A	Uses custom user-defined calibration (voltage to fuel quantity)
	Any voltage-output fuel quantity sensor	N/A	Uses custom user-defined calibration (voltage to fuel quantity)
	Any frequency-output fuel quantity sensor	N/A	Uses custom user-defined calibration (frequency to fuel quantity)
Manifold Pressure	UMA 1EU50A	N/A	0-25 psiA, 0-50 inches Hg
	Garmin GPT 30A	011-05783-00	0-30psiA, 0-60 inches Hg
	Kavlico P4055-30A-E4A	N/A	0-30 psiA, 0-60 inches Hg
	Kavlico P500-30A-E4A	N/A	0-30 psiA, 0-60 inches Hg
	UMA 1EU70A	N/A	0-35 psiA, 0-70 inches Hg
	Any voltage-output pressure transducer	N/A	Uses custom user-defined calibration (voltage to pressure)
Miscellaneous Pressure	Garmin GPT 75G	011-05783-20	0-75 psiG
	Kavlico P4055-5020-3	N/A	0-75 psiG
	Garmin GPT 150G	011-05783-30	0-150 psiG
	Kavlico P4055-5020-4	N/A	0-150 psiG
	UMA 1EM2K	N/A	0-2500 psiG
	Any voltage-output pressure transducer	N/A	Uses custom user-defined calibration (voltage to pressure)

*Items with a Garmin part number may be included in an AXIS flight display sensor kit (section 1), and are available individually from Garmin dealers.

SENSOR TYPE	COMPATIBLE SENSORS	GARMIN P/N*	NOTES
Oil Pressure	Jabiru (VDO 360-003) [1]	N/A	
	Garmin GPT 150G	011-05783-30	0-150 psiG
	Kavlico P4055-5020-4	N/A	0-150 psiG
	Rotax 456180	N/A	
	Rotax 956413	N/A	
	Rotax 956415 [1]	N/A	
	UMA 1EU150G	N/A	0-150 psiG
	Any voltage-output pressure sensor	N/A	Uses custom user-defined calibration (voltage to pressure)
Oil Temperature	Jabiru (VDO 320-021)	N/A	
	Rotax 965531	N/A	
	Rotax 966385	N/A	
	50-150C Thermistor (e.g. VDO 320-XXX series)	N/A	
	Type K Thermocouple	N/A	
	UMA 1B3-2.5R RTD	494-70004-00	UMA temperature sensors without the “R” designation are not compatible
	MS28034 (MIL-T-7990 RTD)	N/A	
Position Sensor	Any trim servo with integrated position potentiometer	N/A	Uses custom user-defined calibration (voltage to position)
	Any standalone potentiometer	N/A	Uses custom user-defined calibration (voltage to position)
RPM	Electronic Ignition	N/A	1-4 pulses/revolution
	Jabiru Alternator Output	N/A	Single phase, 6 pulses/revolution
	JPI 4208XX (Slick/Bendix magneto, pressurized)	N/A	
	Rotax Trigger Coil	N/A	
	UMA 1A3C-2	N/A	
	UMA 1A3C-4	N/A	
	UMA T1A9-1 (Slick magneto)	494-50005-00	
	UMA T1A9-2 (Bendix magneto)	494-50005-01	
	Turbine engine RPM (requires Sandia ST26 signal converter)	N/A	Uses custom user-defined calibration (0-1000 Hz to RPM)
	Any frequency-output RPM sensor	N/A	Uses custom user-defined calibration (0-1000 Hz to RPM)

*Items with a Garmin part number may be included in an AXIS flight display sensor kit (section 1), and are available individually from Garmin dealers.

SENSOR TYPE	COMPATIBLE SENSORS	GARMIN P/N*	NOTES
Turbine Inlet/Outlet/Interstage Temperature (TIT/TOT/ITT)	Type K thermocouple	N/A	

*Items with a Garmin part number may be included in an AXIS flight display sensor kit (section 1), and are available individually from Garmin dealers.

[1] For GEA 110, these sensors are available on General Purpose inputs.

C.13 Antennas

This section contains information for GPS/WAAS, ADS-B, COM, VHF NAV, Glideslope, and Marker Beacon antennas.

C.13.1 GPS/WAAS

Antenna performance is critical to the GPS/SBAS operation. The antennas listed in table C-41 meet specification as documented in *Antenna Minimum Performance Specifications for Garmin's GPS/WAAS Receiver System*, P/N 004-00287-00. AXIS must be installed with one of these antennas to achieve acceptable performance.

Each GDU 116C and GDU 116NC is required to be interfaced to an antenna listed in table C-41.

Table C-41 Approved IFR GPS/WAAS Antennas

Model/Description	Conn Type	Mfr	Part Number
GA 35S, GPS/WAAS [1]	TNC	Garmin	010-02639-00
GA 35, GPS/WAAS [1]	TNC	Garmin	013-00235-( )
		Aero Antenna	AT575-93G( )-TNCF-000-RG-27-NM
GA 36, GPS/WAAS	TNC	Garmin	013-00244-( )
		Aero Antenna	AT575-126G( )-TNCF-000-RG-27-NM
GA 37, GPS/WAAS/XM	TNC [2]	Garmin	013-00245-( )
		Aero Antenna	AT2300-126G( )-TNCF-000-RG-27-NM
A33W, WAAS	TNC	Garmin	013-00261-( )
		Aero Antenna	AT575-332G( )- TNCF-000-RG-27-NM
GPS/VHF	TNC/BNC [3]	Comant	CI-2580-200
GPS/VHF	TNC/BNC [3]	Comant	CI-2728-200
GPS/XM/VHF	TNC/TNC/BNC [4]	Comant	CI-2580-410
GPS/XM/VHF	TNC/TNC/BNC [4]	Comant	CI-2728-410
GPS/WAAS	TNC	Comant	CI-428-200
GPS/XM	TNC/TNC	Comant	CI-428-410

[1] Same mounting hole pattern as GA 56, but GA 35 and GA 35S antennas have a physically larger footprint.

[2] The GA 37 antenna has two TNC connectors, The GPS/WAAS TNC has a blue band and the XM TNC has a yellow band.

[3] The GPS connector is a TNC type. The VHF connector is a BNC type.

[4] The GPS connector is a TNC type. The XM connector is a TNC type. The VHF connector is a BNC type.

Table C-42 GA 35S P/N 010-02639-00

Item Description	P/N	Qty
GA 35S antenna, white	011-05754-00	1
Install kit, GA 35S, thru mount	011-05759-00	1

In a system made up of only GDU 116B displays, at least 1 display in the system (preferably PFD1) , must be interfaced to an antenna listed in table C-41 or table C-43. Any other base display in the system can be connected to an antenna listed in table C-41 or table C-43, for additional system redundancy.

NOTE

GDU 116B variant AXIS displays are backwards compatible with GA 26, GA 56, or GA 57X antennas that were connected to a previously installed G3X Touch system. GDU 116C and GDU 116NC are not backwards compatible with these.

NOTE

GDU 116B displays are backward compatible with G3X Touch antennas.

Table C-43 Compatible VFR GPS Antenna

Manufacturer	Model	Description	Connector Type	Part Number	Notes
Garmin	Glareshield Mount	GPS Antenna	BNC	011-04036-10	[1]
	Glareshield Mount	GPS Antenna	TNC	011-04036-00	[1] [2]

[1] Applicable for GDU 116B only.

[2] Requires a TNC-to-BNC adapter (P/N 330-01754-00).

Garmin recommends the antennas shown in table C-41 and table C-43, Any equivalent GPS antenna that meets the specifications listed in table C-44 will work with the AXIS GDU 116B displays.

Table C-44 GPS or GPS/WAAS Antenna Minimum Requirements

Characteristics	Specifications
Frequency Range	1565 to 1585 MHz
Gain	16 to 25 dB typical, 40 dB max.
Noise Figure	<4.00 dB
Nominal Output Impedance	50 Ω
Supply Voltage	4.30 VDC to 5.65 VDC
Supply Current	up to 60 mA
Output Connector	BNC or TNC

C.13.2 ADS-B

The GDL 52R requires an external monopole or blade-type ADS-B antenna for reception, that meets the following specifications:

- Standard 50 Ω vertically polarized antenna with a VSWR < 1.7:1 at 978 MHz and < 1.5:1 at 1090 MHz
- TSO-C66, TSO-C74, or TSO-C112 antennas that also meet the VSWR specification

C.13.3 COM

Each GTR 20, GTR 200B, GDU 116C, and GDU 116NC require an external VHF COM antenna for reception, that meets the following specifications:

- Standard 50Ω vertically polarized antenna with coaxial cable
- TSO-C37( ) and C38( ) or TSO-C169( )

C.13.4 VHF NAV

The GDU 116NC requires an external NAV antenna for reception, that meets the following specifications:

- 50Ω, horizontally polarized with coaxial cable.
- Must meet TSO-C40( ) and C36( ). If the NAV antenna is a combined VOR/LOC/GS antenna, it must meet TSO-C40( ), C36( ), and C34( ).

C.13.5 Glideslope

Must meet TSO-C34( ). 50Ω, horizontally polarized with coaxial cable or low-loss splitter used with the VOR/LOC antenna.

C.13.6 Marker Beacon

The GMA 245RM may optionally be connected to an external marker beacon antenna for reception. The antenna must meet TSO-C35( ). The marker beacon antenna should be mounted on a flat surface on the underside of the aircraft body.

The antenna should be located to minimize the amount of structure between it and the ground radio stations. It should be located as far away as possible from transmitter antennas.

In a composite aircraft, the antenna must have an acceptable ground plane. Conductive wire mesh, radials, or thin aluminum sheets embedded in the composite material provide the proper ground plane.

APPENDIX D FLIGHT TEST PLAN FOR AUTOPILOT TUNING

D.1 Autopilot Flight Test Plan Introduction D-1
D.2 Gain Descriptions D-2
D.2.1 Roll Servo D-2
D.2.2 Pitch Servo D-2
D.2.3 Yaw Damper D-2
D.2.4 Trim Control D-2
D.3 Flight Test Outline D-3

D.1 Autopilot Flight Test Plan Introduction

This flight test plan provides a general outline for testing and tuning the GFC500X autopilot in an AXIS flight display installation. It is important to complete the steps of this procedure in the order they are presented.

WARNING

This stage of the flight test involves allowing the GSA 28 autopilot servos to manipulate the flight control surfaces of the aircraft. Extreme caution should be used during the initial engagement of the autopilot system, and through every step of this procedure. The pilot should always have easy access to the autopilot disconnect and take control of the aircraft at any time.

WARNING

Prior to beginning this procedure, the autopilot configuration portion of section 5.6 and on ground autopilot and trim checkout procedure described in section 6.14 must be satisfactorily completed. It is critical that these steps are satisfactorily completed prior to beginning this procedure.

WARNING

Prior to beginning this procedure, read the AXIS pilot's guide to achieve complete and working competency in the controls used to operate the flight director, autopilot and yaw damper. It is critical to understand the pilot controls of this system prior to engaging the autopilot in-air for the first time.

CAUTION

At a minimum, adhere to the following safety guidelines before the initial autopilot engagement, and any subsequent engagements while exercising this procedure:

- *Quick access to autopilot disconnect*
- *Safe altitude above and away from all terrain and obstacles*
- *No air traffic in the area*
- *Safe airspeed below maneuvering speed (VA)*

NOTE

Installer Mode must be enabled to perform the following procedure.

D.2 Gain Descriptions

D.2.1 Roll Servo

During the flight test phase of the autopilot checkout, the roll servo gain adjusts the responsiveness of the roll servo to the desired in-flight performance.

D.2.2 Pitch Servo

Vertical control of the aircraft is all based on controlling the pitch angle with two additional sub-modes for vertical speed and airspeed. The basic pitch mode performance must be properly adjusted before changing settings that adjust the vertical speed and airspeed-based modes.

NOTE

It is important to ensure proper autopilot performance in PIT mode before proceeding to adjust other autopilot pitch axis gains and modes (including ALT and VS modes).

D.2.3 Yaw Damper

During the flight test phase, the yaw damper is configured and set up after the basic two axis pitch and roll performance has been properly configured. This allows the pilot to focus on adjusting the performance of each individual component of the autopilot system without trying to tune them all at once.

NOTE

Ensure basic autopilot functionality is properly adjusted before using the yaw damper.

D.2.4 Trim Control

NOTE

Initial autopilot tuning is done with trim control disabled.

During the flight test phase, the auto-trim and speed scheduled trim system is disabled until the primary autopilot system has been properly calibrated. This allows the pilot to focus on adjusting the performance of the primary autopilot system without having the auto-trim functionality interfere.

While auto-trim and speed-scheduled trim are disabled, or anytime the GSA 28 servo is powered off, a normally closed internal relay connects the trim switches directly to the trim motor. This bypasses any servo influence over pilot-commanded trim inputs.

D.3 Flight Test Outline

STEP 1 - VERIFY GSA 28 SERVO ARM TO AIRCRAFT CONTROL LINKAGE
The GSA 28 autopilot servos have the finest control, most torque, and least amount of slop when connected to the control linkage using the inner most hole on the GSA 28 servo arm. This provides the best autopilot control and experience for the user. For most of the RV series of aircraft, the optimum servo arm mounting hole has been determined and documented in the installation manual and is not always the inner hole. Use this guidance when available and ensure compliance with the **WARNING** below for any installation. Verify GSA 28 is Connected to the Inner Most Hole Possible: 1. Connect the GSA 28 control servo arm to the innermost hole possible while still allowing for proper aircraft control linkage movement. **WARNING** *It is vital to ensure the autopilot servo and aircraft control linkage is free to move throughout its entire range of travel without binding or interference. Failure to ensure adequate clearance between the moving parts of the control system linkage and nearby structure could result in serious injury or death.*

STEP 2 - SET INITIAL SERVO TORQUE LIMITS
Each GSA 28 servo has a configurable maximum torque setting. This determines how much torque the servo will output before the electronic slip clutch begins to slip. The Max Torque setting for each axis should be set high enough to not slip during in flight air loading, but the torque setting should be low enough for the pilot to override the autopilot if required. Find the maximum torque value that can still be overpowered by the pilot in an emergency situation. Set Initial Servo Torque Limits: 1. While on the ground, engage the autopilot and slowly apply force to the stick in the opposite direction of the flight director command, to overpower the servo. 2. Verify that the servo can be overpowered in both the pitch, roll and yaw axis. a. If the autopilot cannot be overpowered, proceed to step 3 to reduce the Maximum Torque setting for the associated servo. b. If the servo torque is easy to overcome by the pilot, proceed to step 3 and raise the torque value to meet the desired performance. c. If there are no changes, it is not necessary to proceed to step 3. 3. Press the **MENU** key two times on the GDU to enter the MAIN MENU page. 4. Select Settings and Tools 5. Select Autopilot 6. Select the Roll Axis Tab and set the Max Torque. 7. Select the Pitch Axis Tab and set the Max Torque. 8. Select the Yaw Axis Tab and set the Max Torque.

STEP 3 – DISABLE TRIM MOTOR CONTROL AND YAW DAMPER SERVO
During the flight test phase, the yaw damper is configured and set up after the basic two axis pitch and roll performance has been properly configured. Auto-trim and speed scheduled trim system are further set up after yaw damper performance has been properly configured.

1. Disable the Yaw Damper Servo using the steps outlined below. The Yaw Damper servo will be re-enabled later in this procedure, after the basic two axis pitch and roll performance has been properly configured.
   a. With AXIS in configuration mode, select the Devices Application.
   b. Touch the GFC 500X tab.
   c. Touch Modify.
   d. Under the Autopilot Servos header, set **Autopilot Yaw Servo** to Disabled.
2. Disable trim motor control on any applicable axis.

NOTE

Trim motor control is re-enabled later in the procedure, when evaluating and calibrating trim control. While these settings are disabled, manual electric trim commands still pass through from the pilot trim switches to the DC Trim motor, without any influence of the GSA 28.

   a. With AXIS in configuration mode, select the Autopilot Application.
   b. Touch the Roll Trim Tab and disable **Roll Trim Motor Control**.
   c. Touch the Pitch Trim Tab and disable **Pitch Trim Motor Control**.
   d. Touch the Yaw Trim Tab and disable **Yaw Trim Motor Control**.

STEP 4 – PITCH/ROLL ON GROUND AUTOPILOT TEST
Prior to the autopilot tuning test flight, perform an initial autopilot engagement and checkout with the aircraft on the ground to verify proper control movement. Engage AP and Verify Proper Control Movement: 1. Engage AP in HDG/PIT mode. 2. Move heading bug and verify proper aileron response. 3. Move pitch reference and verify proper elevator response. 4. Verify autopilot servos can be overpowered by the pilot. 5. Verify autopilot disconnect functionality by pressing the AP Disconnect button to disengage the autopilot. 6. If any of the above tests fail, refer to the section section 6.14 to correct any issues.

STEP 5 – INITIAL AUTOPILOT ENGAGEMENT
The next phase of setting up the Garmin autopilot system is to verify and tune the proper functionality of the autopilot system in the air. **WARNING** *This stage of the flight test involves allowing the GSA 28 autopilot servos to manipulate the flight control surfaces of the aircraft. Extreme caution should be used during the initial engagement of the autopilot system. The pilot should always have easy access to the autopilot disconnect button to disconnect the autopilot and take control of the aircraft at any time.* **WARNING** *All initial autopilot engagement and tuning should be done well below the maneuvering speed of the aircraft (VA) at a sufficient altitude to allow for aircraft recovery in an emergency situation.* The autopilot needs to be engaged, and the pitch and roll gains coarsely adjusted so the Autopilot can roughly maintain straight and level flight. Engage AP in PIT/ROL Mode and Set Initial Pitch/Roll Gains: 1. Fly the aircraft to a sufficient altitude of 3000 feet AGL or higher. 2. Set the aircraft power to maintain straight and level flight with an airspeed below the maximum maneuvering speed VA. 3. Manually trim the aircraft so that it can fly straight and level at this altitude and airspeed relatively hands off. 4. Engage the Autopilot in PIT/ROL mode. 5. If there are any pitch or roll oscillations or aggressive responses, disengage the autopilot. 6. Reduce the associated “Pitch Servo Gain” or “Roll Servo Gain” and reengage the Autopilot in PIT/ROL mode until the aggressiveness is removed.

STEP 6 – ROLL SERVO GAIN TUNING

The Roll servo has a single gain that it uses to control all lateral modes of the autopilot including ROL, HDG, GPS, LOC, VOR, and LVL. The objective of this step is to set the Roll Servo Gain high enough to allow the autopilot to control the aircraft quickly and accurately, and properly fly the desired roll angle, heading, or track, but below the gain level that would cause the autopilot to respond in an overly aggressive manner.

Finding the Roll servo gain setting suitable for the aircraft involves engaging the autopilot in ROL mode, displacing the aircraft from the flight director commanded roll angle, and observing the response to the upset. The desired response is called a “dead beat response.” One in which the stick promptly returns to the neutral position and stops “dead,” neither cycling left and right (gain too high) or struggling to regain the neutral position (gain too low). As you increase the gain above the dead stick response, you will see the stick “bounce” or “cycle” once, twice, or even three times.

The recommended Roll Servo Gain setting is one half the gain value that causes a “three cycle response” to a quick control stick input. This setting should result in the “dead beat response.” For example, if a gain setting of 2.0 caused a three-cycle response, the final Roll Servo Gain would be set to 1.0.

Use the procedure and table below to record the dead beat, one, two, and three cycle response points if possible.

Engage AP in PIT/ROL Mode and Set Initial Pitch/Roll Gains:

1. Engage the autopilot in PIT/ROL mode, commanding a roll attitude of 0° and a pitch attitude that roughly holds altitude for the given power setting.
2. Allow the aircraft to settle in its steady state.
3. Use the control stick to quickly over-power the servo and displace the aircraft from the desired roll angle.
4. The pilot should push the stick to the right or the left for roughly one second and then release the stick.
5. Observe the response of the aircraft controls to the upset and record the result in the table.

NOTE

Using a consistent control displacement force and cadence will result in a more precise autopilot tuning attempt.

6. From the Main Menu, select Settings & Tools, and select Autopilot.
7. Touch the Roll Tab and modify the Roll Servo Gain as necessary to find and record the one, two and three cycle response points.

WARNING

Increase the Roll Servo Gain slowly to make sure the Autopilot does not become overly aggressive and always be prepared to disconnect the autopilot.

STEP 6 – ROLL SERVO GAIN TUNING - CONTINUED

ROLL SERVO GAIN	RESPONSE CYCLES

8. Set the Roll Servo gain to one half the value that resulted in a three-cycle response.

STEP 7 – PIT FLIGHT DIRECTOR MODE REFINEMENT

The GSA 28 pitch servo has a configurable Pitch Servo Gain value. This determines how aggressively the pitch servo will move the elevator surfaces. The objective of this procedure is to set the Pitch Servo Gain high enough to allow the autopilot to control the aircraft quickly and accurately to properly fly a desired pitch, but below the gain level that would cause the autopilot to respond overly aggressively.

NOTE

Pitch Servo Gain should only be adjusted to refine autopilot performance observed while in PIT Mode. It is imperative that PIT mode performs well before refining the other vertical flight director modes in the following sections. Adjusting other autopilot gains, on top of a poorly performing Pitch Servo Gain, is very unlikely to result in a well performing autopilot. If unable to achieve the performance described in this section after successive failed attempts, contact Garmin Aviation Support before attempting to move on to the remaining steps in this procedure.

NOTE

Once PIT mode is performing well, the Pitch Servo Gain setting should not be further adjusted in the later stages of the autopilot tuning procedure. For example, once this section is satisfactorily completed, do not adjust the Pitch Servo Gain to address fluctuations observed in ALT hold mode.

1. Engage the autopilot in PIT/ROL mode, commanding a roll attitude of 0° and a pitch attitude that roughly holds altitude for the given power setting.
2. Allow the aircraft to settle in its steady state.
3. Use the control stick to quickly over-power the servo and displace the aircraft from the desired pitch angle.
4. The pilot should push or pull the stick up or down for roughly one second and release the stick.
5. Observe the response of the aircraft controls to the upset, and record the result in the table below.

NOTE

Using a consistent control displacement force and cadence will result in more precise autopilot tuning attempt.

6. From the Main Menu, select Settings & Tools, and select Autopilot.
7. Touch the Pitch Tab, and modify the Pitch Servo Gain as necessary to find and record the one, two and three cycle response points.

WARNING

Increase the Pitch Servo Gain slowly to make sure the Autopilot does not become overly aggressive and always be prepared to disconnect the autopilot.

STEP 7 – PIT FLIGHT DIRECTOR MODE REFINEMENT

PITCH SERVO GAIN	RESPONSE CYCLES

8. Set the Pitch Servo gain to one half the value that resulted in a three-cycle response.

STEP 8 – VERTICAL SPEED AND ALT HOLD FLIGHT DIRECTOR MODE PERFORMANCE REFINEMENT

The vertical speed gain is adjusted to achieve reliable performance in the Vertical Speed flight director mode which in turn, dictates how well flight director ALT mode holds altitude. When the aircraft flies well in the VS Flight director mode, ALT hold mode performs well as a byproduct.

NOTE

Although satisfactory performance in ALT Mode is dependent upon the Pitch Servo Gain being properly tuned (satisfactory performance in PIT mode), the Pitch Servo Gain is not what is used to refine ALT mode performance. ALT mode performance is refined by adjusting the Vertical Speed Gain. However, it is imperative that the autopilot control the aircraft in an acceptable manner in PIT mode prior to attempting to tune the vertical speed gain. If satisfactory PIT mode performance was not attained in step 7, return to step 7, do not attempt to tune ALT mode. Contact Support if necessary.

To adjust the Vertical Speed Gain, perform the following:

1. Place the autopilot in VS/ROL mode commanding a bank angle of zero and a vertical speed setting of zero fpm. To tune the vertical speed gain, allow the aircraft to settle in its steady state (vertical speed approximately zero), then use the control stick to over-power the servo and displace the aircraft from the desired vertical speed of zero.
2. The pilot should pull or push the stick up or down for roughly one-two seconds to establish a new rate of climb or decent and then release the stick.
3. After releasing the control stick see the AP response by watching the control stick and vertical speed indicator.
4. The aircraft should return to the desired vertical speed of zero without being too aggressive or lazy.
   a. If the aircraft is not as responsive as desired and struggles to recapture the desired vertical speed target, increase the aggressiveness of the autopilot response, by increasing the vertical speed gain. This will correct a lazy autopilot response to the induced upset.
   b. If the aircraft is more responsive than desired and overly aggressive when recapturing the desired vertical speed target, decrease the aggressiveness of the autopilot response, by decreasing the vertical speed gain. This will correct a lazy autopilot response to the induced upset.

STEP 9 – VERIFY ALTITUDE HOLD
Altitude hold (ALT) performance hinges on the successful refinement of the Vertical Speed gain in Step 8. Once the vertical speed gain has been set in Step 8, place the autopilot in ALT/ROL mode and verify it can acceptably hold altitude. This is a verification step only. If the autopilot struggles to hold altitude in ALT mode acceptably, return to the previous step and continue to refine the vertical speed gain. **NOTE** *As a reminder, ALT Mode performance is dependent on acceptable Vertical Speed mode performance, which in turn relies on acceptable performance in PIT Mode, from Step 7. If PIT mode is not performing well, return to step 7, before repeating Step 8.* If you cannot successfully set your Vertical Speed Gain to your satisfaction, contact Garmin at TeamX@garmin.com for assistance and provide us with Flight Data Logs of the aircraft operating in the problematic flight director mode.

STEP 10 – VERIFY ALTITUDE CAPTURE IN ALT MODE
With the autopilot now able to properly hold a selected altitude, the ability to capture a selected altitude can be refined using the Vertical Accel Gain. The Vertical Accel Gain is used to modify the autopilot response to reaching a selected altitude and transitioning to ALT mode from other from other vertical flight director modes, such as IAS climb or descent or VS climb or descent. This gain can be thought of as an “anticipation gain.” When increased, the autopilot will more readily anticipate the altitude intercept, and level off sooner. If set too high, the autopilot will undershoot the altitude target. When decreased, the autopilot will anticipate the altitude intercept less, and if set too low, may overshoot the altitude target. This setting is most often left set at 1.00, but can be adjusted when necessary to improve altitude captures when climbing or descending in VS or VNAV mode. To complete this step, a vertical speed (VS) climb will be used to intercept and capture a selected altitude in ALT mode. 1. Engage ALT mode at your current altitude. Set the altitude selector to a selected altitude at least a few hundred feet above your current altitude. 2. Engage VS mode, and command a nominal climb for your aircraft to capture the new selected altitude. “ALTS” displays in white on the autopilot annunciator bar, to indicate ALT mode is armed for intercept when it reaches the new altitude. 3. As you approach the selected altitude, observe the autopilot behavior when the autopilot transitions from VS mode back to ALT mode. a. Set the vertical accel gain higher if the aircraft objectionably overshoots the altitude target before leveling off at the correct altitude. b. Set the vertical accel gain lower if the aircraft objectionably undershoots the altitude target before leveling off at the correct altitude. The GSA 28 pitch servo is capable of holding the aircraft at a desired vertical speed. The Vertical Accel Gain should be increased if the aircraft is overshooting the desired vertical speed target (when the flight director is in vertical speed (VS) mode) when closing on the bug. The Vertical Accel Gain should be decreased if the aircraft is appears to back off from the desired vertical speed target when closing on the bug. Vertical speed gain increases pitch activity to capture a target, vertical accel gain dampens oscillations in that target capture.

STEP 11 – AIRSPEED GAIN TUNING

NOTE

Although satisfactory performance in IAS Mode is dependent upon the Pitch Servo Gain being properly tuned (satisfactory performance in PIT mode), the Pitch Servo Gain is not what is used to refine IAS mode performance. IAS mode is tuned by adjusting the Airspeed Gain, however it is imperative that the autopilot control the aircraft in an acceptable manner in PIT mode prior to attempting to tune the vertical speed gain. If satisfactory PIT mode performance was not attained in step 6, return to section 6, do not attempt to tune IAS mode. Contact Support if necessary.

1. Place the autopilot in IAS/ROL mode commanding a bank angle of zero and an IAS speed that roughly allows the aircraft to hold altitude for the given power setting.

CAUTION

Remember to stay below the maneuvering speed of the aircraft (Va).

2. Allow the aircraft to settle into its steady state, then use the control stick to over-power the servo and displace the aircraft from the desired airspeed.
3. The pilot should pull or push the stick up or down for roughly one-two seconds to establish a new airspeed and then release the stick.
4. After releasing the control stick observe the AP response by watching the control stick and airspeed indicator. The aircraft should promptly return to the desired airspeed without being overly aggressive.
   a. The Airspeed Gain should be increased if the aircraft is lazy and struggles to hold the desired airspeed target when the flight director is in IAS mode.
   b. The Airspeed Gain should be decreased if the aircraft is overly aggressive when trying to hold the desired airspeed target.

Make airspeed reference changes in both directions and observe the initial pitch to achieve the new speed reference. If the initial pitch is too slow increase the $\text{Airspeed_Gain}_{G5}$. If initial pitch is too fast or displays a ratcheting behavior (due to limiters), decrease the $\text{Airspeed_Gain}_{G5}$.

STEP 12 – AIRSPEED ACCEL GAIN
The Airspeed Accel gain adds additional damping to airspeed capture while in IAS mode, and closing in a new IAS target airspeed. 1. Place the autopilot in IAS/ROL mode commanding a bank angle of zero and an IAS speed that roughly allows the aircraft to hold altitude for the given power setting. **CAUTION** *Remember to stay below the maneuvering speed of the aircraft (Va).* 2. Allow the aircraft to settle into its steady state, then use the control stick to over-power the servo and displace the aircraft from the desired airspeed. 3. Make a speed reference change using the GMC 507 control wheel, or autopilot menu in the AXIS display. Observe the behavior of the autopilot as it closes in on the new airspeed target. a. The Airspeed Accel Gain should be increased if the aircraft is overshooting the desired airspeed target when closing on the bug when the flight director is in IAS mode. b. The Airspeed Accel Gain should be decreased if the aircraft appears to back off from the desired airspeed target when closing on the bug.

STEP 13 – AIRSPEED TRACK GAIN
The tracking phase is entered when the airspeed error is less than 5 knots for greater than 20 seconds. Ensure the reference is being tracked for more than 20 seconds to guarantee the tracking gain is the only operator for pitch changes. The Airspeed Track Gain should be increased if the aircraft is overly sluggish while tracking airspeed when the airspeed error is less than 5 knots. The Airspeed Track Gain should be decreased if the aircraft is overly aggressive while tracking airspeed when the airspeed error is less than 5 knots. The tracking phase is entered when the airspeed error is less than 5 knots for greater than 20 seconds. Ensure the reference is being tracked for more than 20 seconds to guarantee the tracking gain is the only operator for pitch changes.

STEP 14 – FULL AUTOPILOT CHECKOUT (VERIFICATION OF PRIMARY PITCH/ROLL AXES)
The autopilot should be fully tuned in both pitch and roll at this point. The pilot should exercise all autopilot modes and transitions and verify acceptable performance. If performance is found not to be acceptable, return the previous tuning steps. Remember, turn PIT/ROL first, then proceed to tuning the secondary VS and IAS modes. If you cannot get your autopilot performing acceptably, first gather data by flying the aircraft for 1-2 minutes in the autopilot mode where you are experiencing unacceptable performance, while logging data. Then email your log file to TeamX@garmin.com and we will assist you in turning your aircraft for optimal performance. **NOTE** *If a previous autopilot tuning attempt did not result in satisfactory performance, it is recommended to reset all autopilot configuration settings to defaults using the normal mode autopilot configuration controls, and repeat this flight test procedure in its entirety. To reset to defaults, power on the system in normal mode, press menu twice, touch Settings & Tools, and touch autopilot. Press Menu and select Restore Defaults. This will reset servo torque values, which must be re-configured in the subsequent attempt. Do not reset defaults from configuration mode; this will result in a broader set of configuration settings being reset.*

STEP 15 – RE-ENABLE YAW DAMPER SERVO AND PERFORM YAW DAMPER ON GROUND DIRECTIONAL TEST
One the autopilot is performing well in on the pitch/roll axes, the next phase of setting up the yaw damper system is to verify and tune the proper functionality of the yaw damper system in the air. 1. The Yaw Damper Servo using the steps outlined below. a. In AXIS configuration mode, select the Devices Application. b. Touch the GFC 500X tab. Touch Modify. c. Under the Autopilot Servos header, Set Autopilot Yaw Servo to Enabled. 2. Engage YD and Verify Proper Control Movement: a. Move aircraft nose back and forth and verify proper rudder response. b. Verify yaw damper servo can be overpowered by the pilot. c. Verify autopilot disconnect functionality by pressing the AP Disconnect button or pressing the YD button on the AXIS system autopilot controls to disengage the yaw damper. d. If any of the above tests fail, refer to section 6.14 to correct these issues.

STEP 16 – YAW SERVO GAIN TUNING
The GSA 28 yaw damper has a configurable servo gain value. This determines how aggressively the yaw servo will move the rudder surface. The Servo Gain should be set high enough to properly dampen yaw rates, but low enough to avoid being overly aggressive.

NOTE

Make sure basic pitch and roll autopilot functionality is properly adjusted before using the yaw damper. This is done so the pilot can focus on properly adjusting the performance of each individual component of the autopilot system without trying to tune them all at once.

The Yaw Damper Servo Gain setting is used to set the aggressiveness of the yaw servo. A larger number will cause the yaw servo to more aggressively control the aircraft, and a smaller number will cause the yaw servo to less aggressively control the aircraft.

1. Press MENU key twice.
2. Touch Settings & Tools >Autopilot > Yaw Axis.
3. With the aircraft approximately level, engage the autopilot in LVL mode.
4. Press the YD button on the GMC Mode Controller or AXIS display to disengage the Yaw damper.
5. Fly a yaw doublet and engage the YD as the ball swings through the center:
   a. Right foot rudder to swing ball left.
   b. Left foot rudder to swing ball back right.
   c. Engage YD by pressing the YD button on the GMC Mode Controller or AXIS display as the ball swings through the center.
   d. Set SERVO GAIN so the established yaw body rate from the yaw doublet is properly dampened out.
6. Adjust the servo gain so the aircraft properly responds to the yaw body rates (tail wagging).
   a. Set the SERVO GAIN higher to make the yaw damper more aggressive.
   b. Set the SERVO GAIN lower to make the yaw damper less aggressive.

STEP 17 – YAW BALL CENTERING GAIN
CAUTION *This autopilot gain typically remains set to the default in most aircraft and should only be changed by the installer if the yaw damper is not properly zeroing the aircraft's lateral acceleration.* The GSA 28 yaw damper is capable of zeroing the aircraft's lateral acceleration or centering the ball as well as dampening aircraft yaw rates. Increasing the Ball Centering Gain will cause the yaw damper to more aggressively respond to non-zero lateral acceleration. Decreasing the Ball Centering Gain will cause the yaw damper to respond less aggressively to non-zero lateral acceleration. Adjust as necessary to achieve the desired performance.

STEP 18 – TRIM ON-GROUND SETUP
During the flight test phase, the trim system is configured and set up after the primary autopilot performance has been properly configured. This is done so the pilot can focus on properly adjusting the performance of the primary autopilot system without having the auto-trim functionality interfere. Now that the autopilot is performing well in its primary control axes, the trim function can be enabled and refined for performance.

NOTE

Ensure basic autopilot functionality is properly adjusted before enabling trim control for any servo.

The GSA 28 servos are capable of airspeed scheduling the aircraft's manual electric trim, moving the DC trim motor faster or slower, depending on the airspeed of the aircraft. The airspeed thresholds for this scheduling are established in this step.

Perform the following procedure while on the ground, prior to modifying trim related settings in air, in step 18:

1. In configuration mode, open the Autopilot application.
2. Touch the Trim tab.
3. Specify airspeeds for Fastest Trim Movement Airspeed, and Slowest Trim Movement Airspeed.
   a. It is recommended to set the Fastest Trim Movement Airspeed threshold to the airspeed typically used to fly the normal aircraft landing pattern.
      - The Fastest Trim Movement Airspeed setting is the airspeed in which the trim motor will be moved at its fastest setting. This should be the lower of the two airspeeds.

   b. It is recommended to set the Slowest Trim Movement Airspeed threshold to the airspeed typically used for cruise flight.
      - The Slowest Trim Movement Airspeed setting is the airspeed in which the trim motor will be moved at its slowest setting. This should be the higher of the two airspeeds.
4. Touch the Roll Trim tab and enable Roll Trim Motor Control. Specify the Fastest and Slowest trim motor movement speed for the Roll Trim motor. These correspond to the Fastest and Slowest Trim Movement airspeeds configured in step 3.
   - Recommend setting the fastest motor speed 100% (will be adjusted later in flight)
   - Recommend setting the slowest motor speed to 25% (will be adjusted later in flight)
5. Touch the Pitch Trim tab and enable Pitch Trim Motor Control. Specify the Fastest and Slowest trim motor movement speed for the Pitch Trim motor. These correspond to the Fastest and Slowest Trim Movement airspeeds configured in step 3.
   - Recommend setting the fastest motor speed 100% (will be adjusted later in flight)
   - Recommend setting the slowest motor speed to 25% (will be adjusted later in flight)
6. Touch the Yaw Trim tab and enable Yaw Trim Motor Control. Specify the Fastest and Slowest trim motor movement speed for the Yaw Trim motor. These correspond to the Fastest and Slowest Trim Movement airspeeds configured in step 3.
   - Recommend setting the fastest motor speed 100% (will be adjusted later in flight)
   - Recommend setting the slowest motor speed to 25% (will be adjusted later in flight)
7. Re-verify proper trim movement in described in section 6.14.2.1.

STEP 19 – TRIM IN AIR SETUP
The next phase of setting up the Garmin GSA 28 based trim control system is to verify and set the proper functionality of the trim system in the air. 1. Press MENU key twice. 2. Touch Settings & Tools > Trim Setup > Roll Trim Axis. 3. Establish the aircraft at the configured Fastest Trim Movement Airspeed threshold. 4. Move the roll trim motor using the manual electric trim inputs and observe the response of the trim motor. ◦ If trim response is overly slow, raise the Roll Trim Fastest Speed setting. ◦ If trim response is overly fast, lower the Roll Trim Fastest Speed setting. 5. Establish the aircraft at the configured Slowest Trim Movement Airspeed threshold. 6. Move the roll trim motor using the manual electric trim inputs and observe the response of the trim motor. ◦ If trim response is overly slow, raise the Roll Trim Slowest Speed setting. ◦ If trim response is overly fast, lower the Roll Trim Slowest Speed setting. 7. Press Back. 8. Select the Pitch Trim Axis selection of the Trim Setup menu. 9. Establish the aircraft at the configured Fastest Trim Movement Airspeed threshold. Move the pitch trim motor using the manual electric trim inputs and observe the response of the trim motor. ◦ If trim response is overly slow, raise the Pitch Trim Fastest Speed setting. ◦ If trim response is overly fast, lower the Pitch Trim Fastest Speed setting. 10. Establish the aircraft at the configured Slowest Trim Movement Airspeed threshold. 11. Move the pitch trim motor using the manual electric trim inputs and observe the response of the trim motor. ◦ If trim response is overly slow, raise the Pitch Trim Slowest Speed setting. ◦ If trim response is overly fast, lower the Pitch Trim Slowest Speed setting. 12. Press Back. 13. Select the Yaw Trim Axis selection of the Trim Setup menu. 14. Establish the aircraft at the configured Fastest Trim Movement Airspeed threshold. 15. Move the yaw trim motor using the manual electric trim inputs and observe the response of the trim motor. ◦ If trim response is overly slow, raise the Yaw Trim Fastest Speed setting. ◦ If trim response is overly fast, lower the Yaw Trim Fastest Speed setting. 16. Establish the aircraft at the configured Slowest Trim Movement Airspeed threshold. 17. Move the yaw trim motor using the manual electric trim inputs and observe the response of the trim motor. ◦ If trim response is overly slow, raise the Yaw Trim Slowest Speed setting. ◦ If trim response is overly fast, lower the Yaw Trim Slowest Speed setting.

APPENDIX E LOGIC SIGNAL EDITOR

E.1 Overview E-2
E.2 The Logic Tree E-2
E.3 Triggers E-3
E.3.1 Data Sources E-3
E.3.2 Activation and De-Activation E-4
E.4 Operators E-5
E.5 Logic Signals E-6
E.6 Worked Example: Configuring Conditional RPM Limits for Engine Warm-Up E-7
E.6.1 The Goal and Approach E-7
E.6.2 Part A: Configuring the Sensors E-8
E.6.3 Part B: Creating the RPM LIMITED Logic Signal E-9
E.6.4 Part C: Adding the Conditional Red Range to the RPM Gauge E-15

E.1 Overview

The AXIS flight display system includes a logic signal editor, accessible within configuration mode. The editor allows the creation of custom logic signals. Logic signals are automated decisions the system makes in real time, based on live sensor data and other configured inputs.

A logic signal is a simple binary value that is always in one of two states: Set (think of it as “on” or “active”) or Clear (“off” or “inactive”). Once a logic signal has been created and configured, its state can be referenced throughout the system.

Logic signals can control dynamic gauge markings or be used to activate custom CAS alerts. By linking a gauge marking to a logic signal, the marking appears or disappears depending on the state of the signal. This allows the creation of gauge ranges that change in real time. For example, a gauge range can be configured to appear only when the engine is in a specific condition and remain hidden otherwise.

CAS alerts can be driven by logic signals in one of two ways. First, if a conditional gauge marking is driven by a logic signal and the gauge marking is configured with the “+Alert” attribute, a CAS message can be generated when the logic signal is active and the relevant gauge value falls within the specified range. Second, custom CAS alerts can be created that are tied directly to the state of a given logic signal, without the need to be tied to an EIS gauge marking. Refer to section 5.5.2.1.

E.2 The Logic Tree

Every logic signal is the result of a logic tree. A logic tree is a chain of connected building blocks, called nodes, where information flows from right to left - inputs enter from the right and the final output exits from the left. At each node, the system asks a question or performs a calculation, arriving at a final answer: Set or Clear.

There are three types of nodes. Table E-1 describes each type of node.

Table E-1 Node Types

Node	Description
Trigger	Monitors a sensor or input and answers a yes/no question. Example: “Is oil temperature below 120°F?”
Operator	Combines the answers from one or more triggers (or other inputs) using logic rules (AND, OR, NOT, etc.). Example: “Has RPM been above 500 for 5 minutes AND is oil temperature still below 120°F?”
Logic Signal	A logic signal can be used as an input to another logic tree. Example: An “Engine Running' logic signal can be created. “Engine Running” can then be used in the following setup: Is the Engine Running AND Altitude over 5,000 ft?

The logic tree is displayed graphically on screen, reading from right to left - triggers and logic signals used as inputs appear on the right, and the logic signal result appears on the left as the output. You can build simple trees with just one trigger feeding directly into a logic signal, or complex trees involving many triggers, multiple operators, and other logic signals as inputs.

E.3 Triggers

Triggers are the starting point of every logic tree. A trigger watches a specific piece of data - like engine RPM or indicated air speed - and continuously asks one question: “Is this value meeting my condition right now?” The answer is one of two things:

- Set (also written as 1) - the condition is currently met
- Clear (also written as 0) - the condition is not currently met

E.3.1 Data Sources

Each trigger requires a data source. Data sources must be configured elsewhere in the system before they can be selected.

Available data sources include:

- Configured analog inputs (e.g., oil pressure transducer, EGT probe)
- Configured frequency inputs (e.g., tachometer signal, 0-10 kHz range)
- Configured discrete inputs (e.g., landing gear position switch, flap position switch)
- Parameters from a configured Rotax FADEC system, including engine speed (RPM), oil pressure, oil temperature, coolant temperature, throttle position, EGT, manifold pressure, and others

In addition, the following flight parameters are available as pre-populated data sources that can be selected directly within the logic signal editor. No separate sensor configuration is required.

- Indicated airspeed (IAS)
- True airspeed (TAS)
- Mach
- Barometric altitude
- Pressure altitude
- Density altitude
- Height AGL (uses only the GPS AGL)
- Ground speed
- On ground state

E.3.2 Activation and De-Activation

Once a data source is selected, the trigger is configured with an activation operation and activation value. These define the exact condition that makes the trigger return Set. A separate deactivation operation and deactivation value define when the trigger returns to Clear. A debounce time (On and Off) can also be configured to prevent brief transients from toggling the trigger state unnecessarily.

The available operations are:

- Less than
- Less than or equals
- Greater than
- Greater than or equals
- Equals
- Does not equal

Example: A trigger watching oil temperature with activation Set to “less than 120°F” returns Set any time the oil temperature is below 120°F, and returns Clear once it reaches or exceeds 120°F.

E.4 Operators

Operators take the Set/Clear outputs from one or more triggers (or other operators, or other logic signals) and combine them into a single result - either Set (1) or Clear (0). They are the logical “thinking” layer between inputs and the final Logic Signal output.

The following operator types are available:

Table E-2 Operators

Operator	What It Does	When to Use It
AND	Returns Set only when ALL inputs are Set. If any input is Clear, returns Clear.	Use when output should only be active if multiple conditions are all simultaneously met — for example, RPM is above idle AND oil temperature is below the warm-up threshold.
OR	Returns Set if ONE OR MORE inputs are Set. Returns Clear only when all inputs are Clear.	Use when output should activate if any one of several independent conditions is detected.
NOR	Returns Clear if one or more inputs are Set. Returns Set only when ALL inputs are Clear.	Use to confirm that none of a Set of conditions exist before enabling a feature.
NAND	Returns Clear only when ALL inputs are Set. Otherwise returns Set.	Inverse of AND — useful when you want output active in all cases except one specific combination of inputs.
XOR	Returns Set if EXACTLY ONE input is Set. Returns Clear if none or more than one are Set.	Use to detect a mismatch between two conditions, or to implement logic that clears when two conditions are simultaneously satisfied.
NOT [1]	Accepts a single input. Returns Set when the input is Clear. Returns Clear when the input is Set.	Turn an “engine running” signal into an “engine NOT running” signal.

[1] The NOT operator is especially useful for inverting a signal.

E.5 Logic Signals

Logic signals are the final result of a logic tree. A logic signal holds a binary state - Set or Clear - determined by the Triggers and Operators connected to it. The state of a logic signal is what gets referenced elsewhere in the system.

Logic signals are primarily used with dynamic EIS gauge markings. When creating or editing a gauge marking in the sensor inputs configuration, the builder can set the marking's mode to one of the following:

- Normal - the marking is always visible, regardless of any logic signal
- Require logic signal Set - the marking is only visible when the specified logic signal is in the Set state
- Require logic signal Clear - the marking is only visible when the specified logic signal is in the Clear state

This makes it possible to create gauge markings that appear or disappear based on real-time conditions. Because CAS messages are generated when a sensor reading falls outside the defined gauge markings, a conditional gauge range can effectively suppress a CAS alert when the engine is in a state where that alert is not meaningful - or add an alert active only during a specific operational phase.

Each logic signal is given a custom name by the builder at the time it is created. This name is what appears in the signal selector when configuring a gauge marking. Choosing a descriptive name (for example, "RPM LIMITED") makes it easier to identify the correct signal when configuring multiple gauges.

Logic signals also support configurable activation and de-activation times. These optional delays can prevent brief transients from changing the Logic Signal state prematurely.

Logic signals can be used as inputs to other logic trees. This allows complex, multi-stage decision chains to be built from simpler components, although the same decision chains can be built into a single logic tree. There is more than one way to accomplish this. Using logic signals as an input to another logic signal would be useful when a generic logic signal such as, "Engine is warming up" can be used by multiple other desired gauge markings or CAS alerts.

E.6 Worked Example: Configuring Conditional RPM Limits for Engine Warm-Up

This section walks through a complete, multi-part example. The goal is to configure an RPM gauge with standard operating ranges, and then add a conditional RPM limit that is automatically enforced during the engine warm-up period - but which clears once the engine has warmed up, whether by reaching an oil temperature target or by running for a set period of time.

E.6.1 The Goal and Approach

To fully comprehend the end result, it is important to review this section in its entirety. Although multiple methods can achieve the same result, this approach more thoroughly explores logic signal behavior and capabilities.

E.6.1.1 The Example Engine

This example uses an engine with an RPM gauge configured for a range of 0-3200 RPM. The standard gauge markings are:

- Green range (normal operating range): 800-2600 RPM
- Yellow range (maximum continuous power): 2600-3000 RPM
- Red range and alert (do not exceed): 3000-3200 RPM

E.6.1.2 The Warm-Up Limitation

The engine manufacturer requires that RPM not exceed 1600 RPM until oil temperature has reached at least 120°F. To enforce this requirement on the EIS gauge, a conditional red range and alert covering 1600-3200 RPM is needed. One only visible during the warm-up period.

E.6.1.3 The Cold-Weather Challenge

In cold weather environments, the engine may idle for extended periods without oil temperature reaching 120°F. Rather than requiring the pilot to wait indefinitely, the RPM limitation should automatically clear after the engine has been running for five minutes - a sufficient warm-up period under normal cold-weather conditions. The timer should only count when the engine is actually running, not when the avionics are powered on.

E.6.1.4 The Approach

A logic signal named RPM LIMITED will be created to control this conditional red range. When the signal is Set, the 1600-3200 RPM red range and alert will appear on the RPM gauge. When clear, it will disappear, and only the standard permanent markings will be in effect.

The signal should set when both of the criteria below are met:

1. Oil temperature is less then 120°F, and
2. The engine RPM is less than 500 RPM or more than 500 RPM for less than five minutes (300 seconds).

E.6.2 Part A: Configuring the Sensors

Before creating the logic signal, configure the RPM sensor and standard (always-visible) RPM gauge markings described in section E.6.1.1. Guidance for configuring engine sensors and gauge markings can be found in section 5.5.2.1. These are permanent markings. They are not conditional on any logic signal.

An oil temperature sensor is required to be configured in the system, as described in section 5.5.2.1. These are permanent markings.They are not conditional on any logic signal.

E.6.3 Part B: Creating the RPM LIMITED Logic Signal

This section walks through the design and configuration of the RPM LIMITED logic signal. The configuration is developed step by step, explaining the reasoning behind each design decision.

E.6.3.1 Opening the Logic Signal Editor and Creating the Signal

1. Navigate to **A&P** > **General** > **Logic Signal Editor**. If no Logic Signals have been created yet, the editor shows "No items to display."

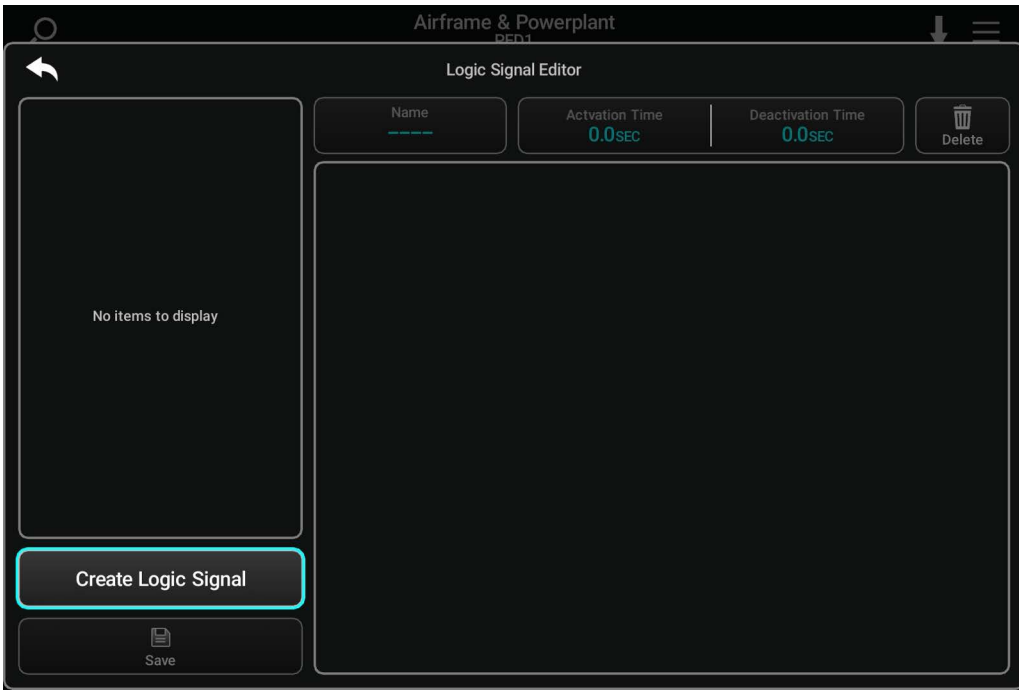

Figure E-1 Logic Signal Editor Page

2. Touch **Create Logic Signal**.
3. Type "RPM LIMITED".
4. Touch **Enter**.

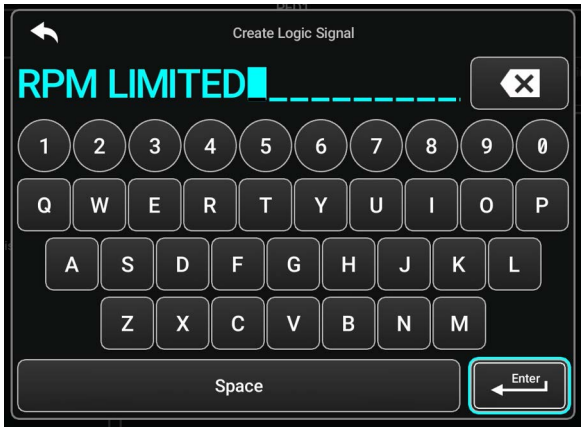

Figure E-2 Onscreen Keyboard

The new logic signal now appears in the list on the left. The logic tree area shows a single default node to a logic signal output node.

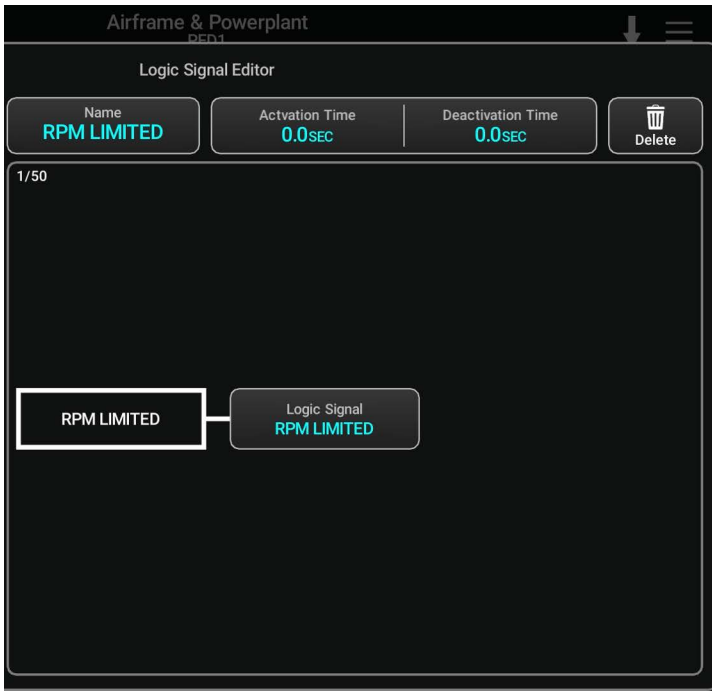

Figure E-3 Default Output Node Screen

E.6.3.2 Changing the Default Node to a Trigger

1. Touch the default node in the tree. The current Node Type shows Logic Signal.
2. Touch **Node Type** to change it.

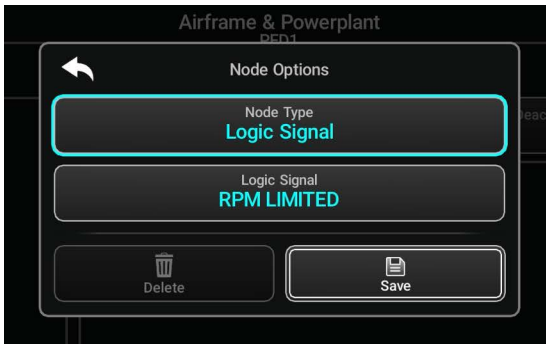

Figure E-4 Node Options Pop-up

3. The Node Type selection screen appears showing conditions and operators.

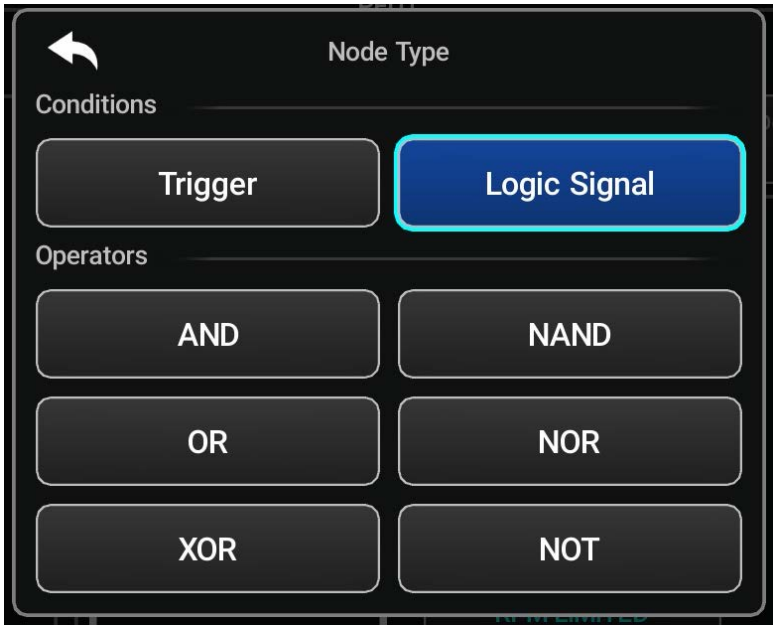

Figure E-5 Node Type Pop-up

4. Select the **AND** operator.

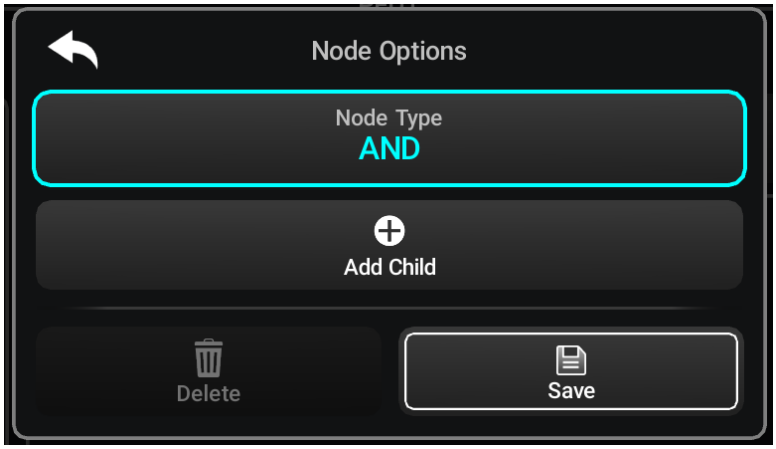

Figure E-6 AND Node

E.6.3.3 Configuring the Oil Temperature Trigger

1. Select **Logic Signal**.

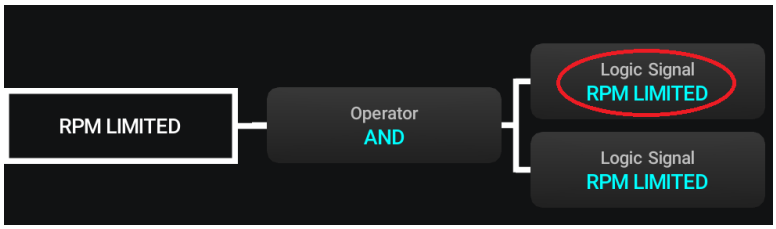

Figure E-7 Top of AND Gate

2. Select **Trigger**.

Configure the trigger with the values shown in table E-3. Note that oil temperature must already be configured in sensor inputs before it appears as an available data source.

Table E-3 Node Options - Trigger

Field	Value
Node Type	Trigger
Data Source	Oil Temp — must be configured in Sensor Inputs before use
Activation Operation	less than
Activation Value	120°F
Activation Time (On Debounce)	1.0 second
De-Activation Operation	greater than or equals
De-Activation Value	120°F
De-Activation Time (Off Debounce)	1.0 second

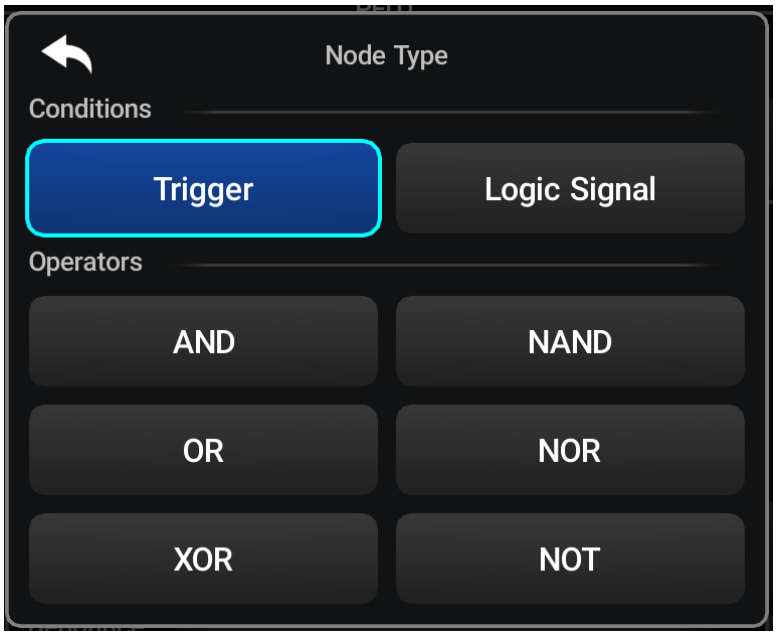

Figure E-8 Node Type Page

Touch **Save**. The Logic Signal Editor now shows the completed Oil Temperature Trigger in the tree.

Figure E-9 Oil Temperature Trigger Page

E.6.3.4 Configuring the RPM Trigger

1. Touch **Logic Signal**.

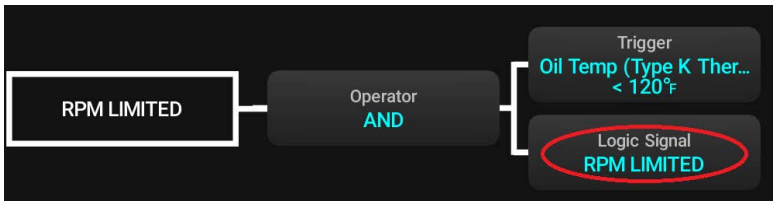

Figure E-10 Bottom of AND Gate

2. Touch **Trigger**.
3. Use the values in table E-3.

Table E-4 RPM Trigger Values

Field	Value
Node Type	Trigger
Data Source	RPM 1 — or the RPM source configured for your engine
Activation Operation	less than
Activation Value	500 RPM
Activation Time (On Debounce)	2.0 seconds
De-Activation Operation	greater than or equals
De-Activation Value	500
De-Activation Time (Off Debounce)	300 seconds (5 minutes)

The RPM trigger uses the deactivation time (On Debounce) of 300 seconds to confirm the engine has been running above 500 RPM for at least five continuous minutes. Figure E-11 displays the completed RPM trigger configuration.

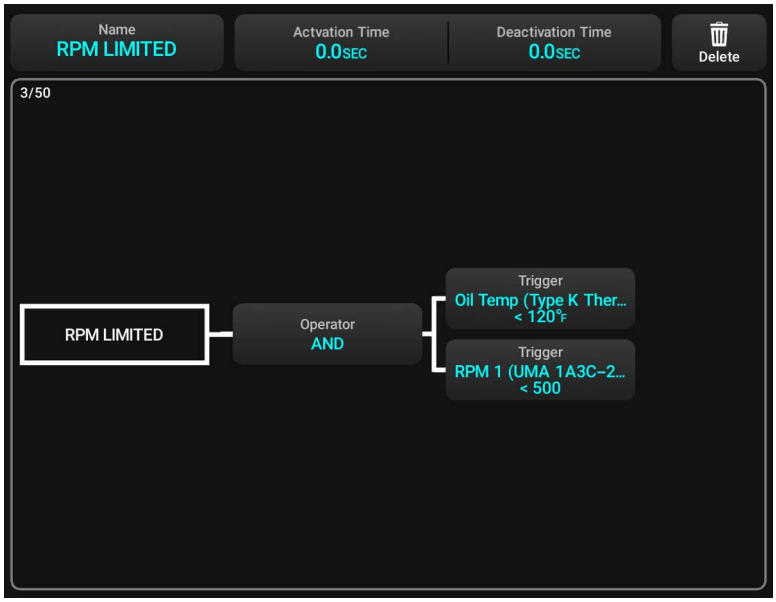

Figure E-11 RPM Limited Signal Page

Save on the main logic signal editor page. The AND tree is now complete.

E.6.4 Part C: Adding the Conditional Red Range to the RPM Gauge

With the RPM LIMITED Logic Signal created, return to the RPM gauge configuration in Sensor Inputs to add the conditional cold-weather red range.

1. Navigate to **A&P** > **Sensor Inputs**.
2. Locate and select “RPM 1.”
3. Enter the selections as shown below.

Table E-5 Conditional Settings

Field	Value
Marking Type	Red Range + Alert
Minimum	1600 RPM
Maximum	3200 RPM (full gauge maximum)
Mode	Require Logic Signal Set
Signal	RPM LIMITED

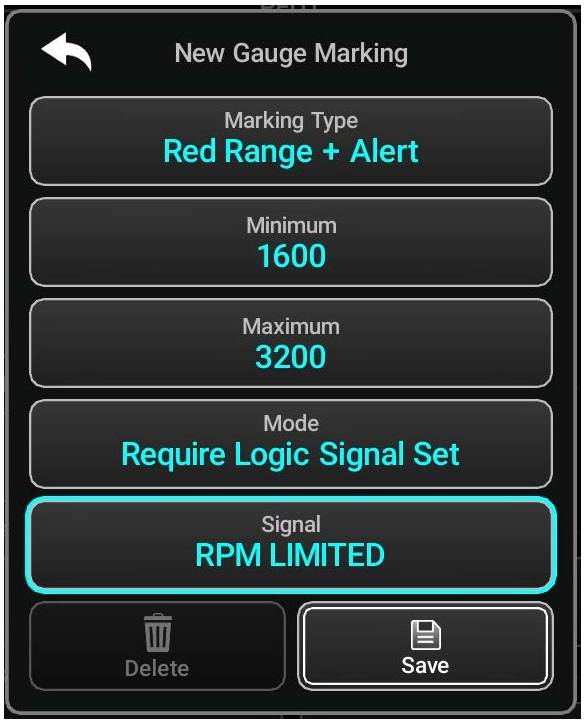

Figure E-12 New Gauge Marking Settings

The conditional red range disappears immediately when the oil temperature threshold is reached, regardless of elapsed running time.

This example demonstrates how Logic Signals can encode multi-condition operational logic directly into the EIS display. Rather than relying on a single sensor threshold, the system can consider context. Understanding the same state (cold oil temperature) means different things depending on whether the engine is running and for how long. The same pattern can be applied to a wide range of scenarios, such as suppressing low oil pressure alerts during engine start or adjusting manifold pressure limits based on operational phase.

APPENDIX F G3X TOUCH UPGRADE

F.1 Introduction F-2
F.2 Planning F-6
F.2.1 Objective F-6
F.2.2 Physical Installation of AXIS Flight Display Units F-6
F.2.3 Display Installation Kits F-6
F.2.4 Supported Equipment F-6
F.2.5 Determination of Required Wiring Harness Modifications F-9
F.3 Preparing G3X Touch System to Upgrade to AXIS Flight Display F-17
F.3.1 Objective F-17
F.3.2 Export Configuration File F-17
F.3.3 Export Fuel Calibration F-17
F.3.4 Record G3X Touch Configuration F-18
F.4 Update Software on External LRUs F-19
F.4.1 HSDB Navigator Position Assignment F-19
F.4.2 Other LRU Position Assignment Considerations F-19
F.5 AXIS Flight Display Fitment F-20
F.6 Make Wiring Harness Modifications F-20
F.7 Wire Harness Mounting, Continuity and Power Checks F-21
F.8 Configure AXIS Flight Display F-21
F.9 Import Fuel Calibration F-22
F.10 Calibrate ADAHRS and Magnetometer F-22
F.11 Update Databases F-22
F.12 Perform Autopilot On Ground Test F-22
F.13 Initial Autopilot Engagement In-Air F-22
F.14 Perform In-Flight AOA Calibration F-22
F.15 Export Configuration F-23

F.1 Introduction

AXIS flight display systems have been carefully designed to allow an easy upgrade path from G3X Touch systems. Specific considerations for the transition to the AXIS flight display system are outlined in this section.

NOTE

In addition to this document, acquire the installation manuals and documentation for any interfacing equipment for which any wiring changes will be required, as determined in section F.2.

NOTE

The information provided in this section is intended to provide a targeted plan for upgrading G3X Touch installations to AXIS Systems. All installation guidance provided in this manual must be complied with in addition to the information provided in this section.

The upgrade path from G3X Touch to AXIS flight display largely reuses the existing G3X Touch wiring architecture.

AXIS flight displays, like G3X Touch, use CAN bus to communicate with most system LRUs, and are backwards compatible with the CAN architecture of a G3X Touch system. AXIS flight displays are also backwards compatible with many of the same ARINC 429 and RS-232 connections used in G3X Touch.

In contrast to G3X Touch, AXIS flight displays also utilize HSDB to communicate between many LRUs. HSDB facilitates expanded capabilities for supported LRUs. HSDB must be added between existing LRUs, in certain cases, and is optional in others.

Figure F-1 outlines the wiring architecture of a G3X Touch system, and illustrates the extent to which the wiring harness that supported G3X Touch is largely reused. LRUs shown with a dashed line, will or may require the addition of an HSDB connection, as described in the following sections.

How system LRUs are connected in the original G3X Touch system is fundamental information required for upgrading to the AXIS flight display system. This information should be available from the original installation documentation, and interconnect drawings that were used to install the G3X Touch system.

NOTE

In many cases, the avionics installer who completed the instrument panel at the time of original install retains a copy of the interconnect drawings for the system. Contact the original installer for these documents, if they were not supplied with the aircraft.

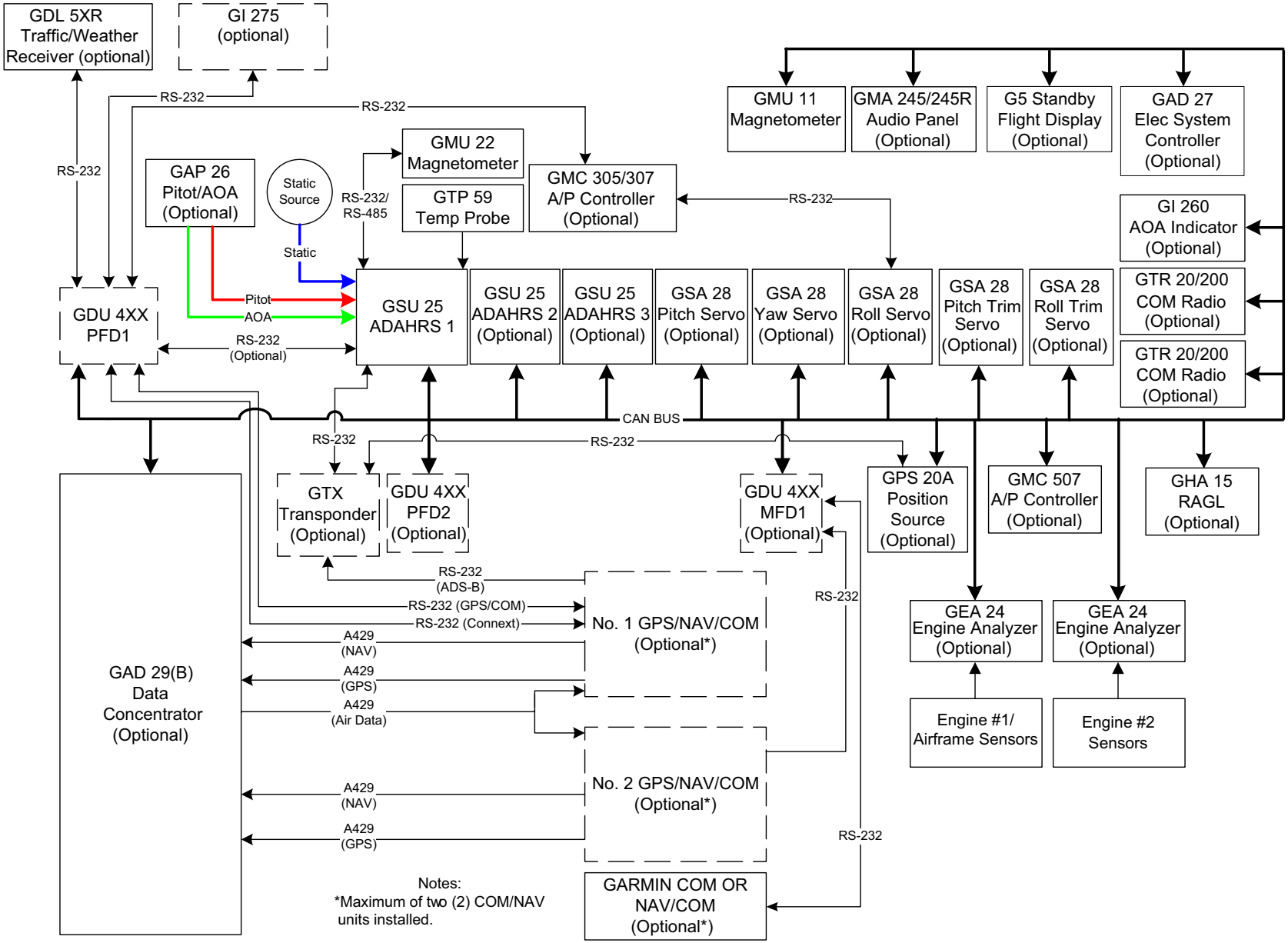

Figure F-1 G3X Block Diagram

Table F-1 Checklist for Completion of G3X Touch Upgrade to AXIS Flight Display

Completed	Item	Reference
	Planning	
❑	Acquire Installation Manual for any interfacing equipment	Section F.1
❑	Acquire Interconnect drawings for original G3X Touch Installation	Section F.1
❑	Determine clearance for each display and display mounted GSU 25	Section F.2.2
❑	Acquire correct AXIS flight display connectors and mounting hardware	Section F.2.4
	Identify the equipment that will be interfaced and verify each interface is supported.	
❑	Update software on G3X Touch	Section F.2.4.1
❑	Create G3X Touch Device List Record	Section F.2.4.2
❑	Determine if any installed equipment violates system limitations	Section F.2.4.3
	Create Interconnect Drawing	
❑	Determine which LRUs in the AXIS flight display system will be connected to the HSDB network	Section F.2.5.1
❑	Create HSDB Block Diagram	Section F.2.5.2
❑	Create Interconnect drawing of planned wiring modifications	Section F.2.5.3
	Prepare Existing Equipment	
❑	Export Configuration File from G3X Touch	Section F.3.2
❑	Export Fuel Calibration from G3X Touch	Section F.3.3
❑	Record G3X Touch Configuration	Section F.3.4
❑	Update Software on Interfacing LRUs	Section F.4
❑	Select System ID on Interfacing LRUs	Section F.4
	Test Fit AXIS Flight Display Equipment	
❑	Remove G3X Touch from Instrument Panel	Section F.5
❑	Mount GSU 25 to AXIS flight display, if required	Section F.5
❑	Install AXIS flight display in Instrument panel, confirm physical fit, and wiring harness clearance	Section F.5
❑	Remove AXIS flight display from Instrument Panel	Section F.5
	Installation of AXIS Flight Display	
❑	Make Wiring Harness Modifications	Section F.6
❑	Wire Harness Continuity and Power Checks	Section F.7

Completed	Item	Reference
Post Installation Tasks		
❑	Configure AXIS flight display system	Section F.8
❑	Calibrate ADAHRS and Magnetometer, if necessary	Section F.10
❑	Update Databases	Section F.11
❑	Perform Autopilot On Ground test	Section F.12
❑	Complete (Abbreviated) In-Air Autopilot Test	Section F.13
❑	Perform in flight AOA calibration	Section F.14

F.2 Planning

F.2.1 Objective

Section F.2 is used to determine what modifications to the aircraft instrument panel and wiring harness will need to be made to support the installation of the AXIS flight display system.

F.2.2 Physical Installation of AXIS Flight Display Units

GDU 116 was designed to occupy the same instrument panel opening used by the G3X Touch, GDU 46X. GDU 116 uses the same mounting hole locations as the GDU 46X. However, the bezel of GDU 116 is 0.075" larger than a GDU 46X on both the left and right side. The top to bottom bezel dimension is unchanged. Installers should plan GDU 116 upgrades carefully if the current GDU 46X is placed within 0.075" laterally of other panel mounted units. If other panel mounted units are within 0.075" of the current GDU 46X, the instrument panel may need to be modified to accept the new GDU 116.

While the AXIS flight display is configured to support direct mounting of a GSU 25 ADAHRS, a different location on the back of the display is used, and in a different orientation. Clearance for the GSU 25 must be considered, and relocation may be required if sufficient clearance is not available.

F.2.3 Display Installation Kits

AXIS display installation kits were designed specifically to address the G3X Touch upgrade path. This ensures duplicate connectors are not required to be purchased. One display installation kit is required per display in the system. Refer section 3.3.1 for more information.

F.2.4 Supported Equipment

This section will help determine the list of equipment that will compose the AXIS flight display system.

F.2.4.1 Update Software on G3X Touch

Before initiating the AXIS flight display upgrade, update the G3X Touch display to the latest software v9.52. Use the procedure described in *G3X/G3X Touch Avionics Installation Manual*, revision AZ. Ensure all system LRUs update to the latest version and report normally with no fault indication in the System Information menu in configuration mode, before continuing.

F.2.4.2 Create Device List Record

For reference in the AXIS flight display upgrade process, complete this step to create a record of the G3X Touch device list.

Power on the G3X Touch system in configuration mode, by pressing and holding **MENU** while applying power. On the System Information menu, ensure all units have a green checkmark and do not report any faults. If any units do not meet this criteria, contact Garmin Aviation Product Support to resolve the issue prior to continuing.

NOTE

It is important that all system LRUs are powered during this process.

Record the first two columns of each row of the Device List, in the System Information menu of G3X Touch configuration mode.

Table F-2 Device List Record

Function	Device Name
Example: COM 1	*GTR 20*

F.2.4.3 System Limitations

This section outlines some limitations of the AXIS flight display system, relative to equipment supported in G3X Touch systems. Incorporate any relevant limitations to modify the device list from the previous step, to generate a final device list for the AXIS flight display installation.

- AXIS flight displays do not support the same video connection that was used in G3X Touch systems. The wiring for G3X Touch video installations will need to be modified to support the updated format and wiring of the HDMI input of the AXIS flight display.
- AXIS flight display systems do not support GDL 39(R) ADS-B receivers. Refer to section 1.2.14.1 to identify a suitable replacement.
- AXIS flight displays do not support non-WAAS GNS units or GNC 300XL/GPS 155XL. Refer to section 1.2.9 to identify a suitable replacement.
- AXIS flight displays do not support remote control of VIRB Action Cameras. Alternate means of controlling an installed VIRB camera must be accounted for in the upgraded installation.
- GDU 465 and GDU 455 displays incorporated a built-in SXM receiver. AXIS flight displays do not offer a built-in SXM receiver.
- G3X Touch supports various analog autopilots by providing heading and course datum via GAD 29B/D. If an autopilot of this type is installed, a GI 275 must be used to interface with these autopilots.
- G3X Touch supported several third-party integrated autopilots via RS-232, such as Trutrak, Trio, or similar. These autopilots are no longer supported. If an autopilot of this type is installed, the existing servos must be replaced with Garmin GSA 28 autopilot servos to integrate with the AXIS flight display system.
- The GTR 200 COM radio is not supported by an RS-232 connection to the system. CAN integration is required.
- If a G3X Touch display is being replaced with an AXIS GDU 116C or GDU 116NC, the GPS antenna used in the G3X Touch installation must be replaced with a compatible antenna. Refer to appendix C. GDU 116B model displays are backwards compatible with the GPS antennas used in G3X Touch displays.
- ADS-B derived traffic data from a GTX 345 family transponder, GNX 375, or GDL 5X ADS-B receiver is supported in AXIS flight displays. TIS-A traffic data from Mode S transponders is not supported.

F.2.5 Determination of Required Wiring Harness Modifications

The remainder of this section is used to create an interconnect drawing of the wiring harness changes to be made to support the upgrade to AXIS. Refer to appendix B to address any limitations identified in the previous section.

F.2.5.1 HSDB Considerations for AXIS System LRUs

Use this section to determine which LRUs from the Device List in section F.2.4.2, will require a connection to the HSDB network.

AXIS Flight Displays

If multiple AXIS flight displays are installed, an HSDB connection must be added between each GDU. If HSDB ports are limiting, each GDU must be connected using another GDU as the intermediate LRU. If the number of ports available are not limiting, each GDU should be connected to every other GDU in the system. Refer to figure B-1.1 for specific wiring guidance.

NOTE

G3X Touch flight displays and AXIS flight displays cannot be installed within the same system.

IFR Navigators

An HSDB connection must be added between at least one AXIS flight display, and each GTN Xi, GPS 175, GNC 355, or GNX 375 in the system.

G3X Touch systems received ARINC 429 data for GPS and/or VHF NAV data, from these units. Those connections can optionally be retained and configured in AXIS to provide GPS and NAV data to a connected G5 in the system. Refer to section B.2 for specific wiring guidance for these units.

NOTE

Ensure any ports that were previously used on an external navigator for MAPMX, CONNEXT and any unused ARINC 429 ports, are disabled in configuration mode of the external navigator upon installation of AXIS.

NOTE

GTN 6XX/7XX navigators and GNS 4XXW/5XXW are supported through the existing RS-232 and ARINC 429 architecture G3X Touch required. No wiring changes are necessary for these units.

GI 275

Each GI 275 standby flight display must be connected via HSDB in AXIS flight display installations. GI 275 was connected via RS-232 in G3X Touch installations. AXIS is not compatible with this interface method. Additionally, like G3X Touch installations, the GI 275 must not make a connection to the CAN bus.

GTS 8XX

GTX 8XX series traffic receivers were supported by G3X Touch using serial data connections. AXIS is not compatible with this interface method. These units must be connected to the system via HSDB in AXIS installations. Refer to figure B-3.4 for specific wiring guidance.

GTX X45

GTX X45 transponders can optionally be connected via HSDB to the AXIS flight display system. While AXIS is backwards compatible with the existing architecture from a G3X Touch interface to these units, HSDB will facilitate future expansion of the interface capabilities between the transponder and the AXIS flight display system. Refer to figure B-3.2 for specific wiring guidance

NOTE

GTX 45R experimental transponders may be connected via existing architecture or HSDB. If HSDB is used, a connection to the GSU 25 must be retained. Refer to figure B-3.1 for specific wiring guidance.

GNC 215 and GTR 205R(x)

GNC 215 and GTR 205R(x) may optionally be connected via HSDB. AXIS flight displays are backwards compatible with the ARINC 429, serial and CAN connections supported by these radios in G3X Touch. HSDB will facilitate future expansion of the capabilities between these units and the AXIS flight display system. For GTR 205R(x) radios that were connected via CAN in a G3X Touch installation, retain the CAN connection for initial installation and configuration. This can be upgraded to HSDB after the GTR 205R(x) has been updated to v2.30+.

GMU 44

An existing GMU 44 (GPN 011-00870-00, serial numbers from 47500000 to 475ZZZZZ) with software v.2.01 cannot be updated by the AXIS system to v2.05. Contact Garmin Aviation Product support for assistance with these units.

F.2.5.2 HSDB Architecture Design

Using the information in this section, apply the generic HSDB architecture design guidance from section 3.2.1 to develop a high-level HSDB architecture block diagram. The diagram should include the LRUs identified in section F.2.5.1 that require connectivity to the HSDB network.

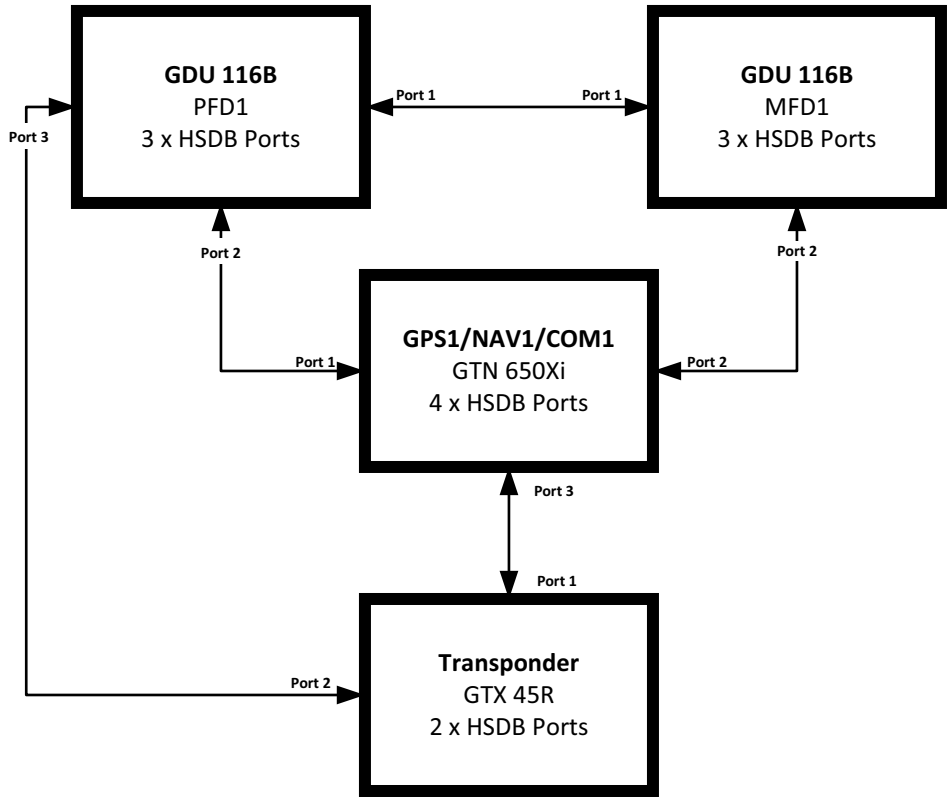

Figure F-2 Example HSDB Architecture Diagram

NOTE

Some G3X Touch systems include pre-existing HSDB connections. It was possible to connect GTX X45 transponders to installed IFR Navigators. When planning the HSDB network, it is important to meet the requirements in section 3.2.1, which may require re-routing existing connections. For example, if a GPS 175 or GNC 355 in the original G3X Touch installation is connected to a transponder in the system via HSDB, the navigator HSDB port must be re-pinned to a display in the system, as it only has one HSDB port and must be connected directly to an AXIS flight display.

The table below outlines the number of HSDB ports available on each HSDB capable LRU.

LRU	Number of HSDB Ports
GDU 116B (Base)	3
GDU 116C (COM)	4
GDU 116NC (NAV/COM)	4
GTN Xi	4
GI 275	2
GTS 8XX	1
GTX 345( )	2
GPS 175/GNX 375/GNC 355	1
GTR 205(R)/GNC 215	1

F.2.5.3 G3X Touch and AXIS Flight Display Connector Pin Assignments

With the block diagram created in figure F-1, and the installation manuals for any interfacing equipment, use this section to generate an interconnect drawing of the wiring harness modifications. These modifications will include the pin for pin connections needed to complete the HSDB system architecture represented by the block diagram from section F.2.5.2, and several other considerations.

F.2.5.3.1 HSDB Connection

Figure F-3 is an example of a generic HSDB connection. In this example, HSDB port 1 of the AXIS flight display is connected to HSDB port 1 of the interfacing LRU. The transmit connections on the AXIS flight display, are connected to the receive connections on the interfacing LRU, and vice versa. Additionally, an A and B connection exists for each direction, and should match on both sides of the wiring path.

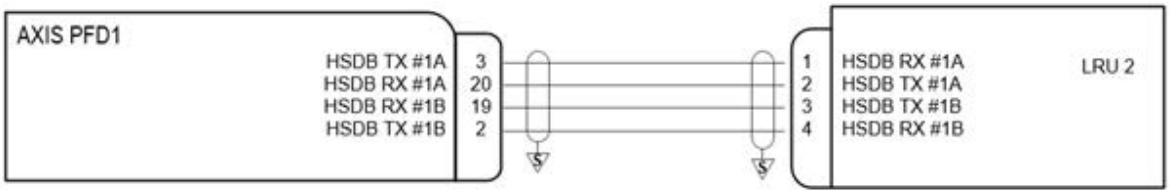

Figure F-3 Generic HSDB Interconnect Diagram

F.2.5.3.2 AXIS Flight Display Connector J1011

The pin assignments of the 9-pin connector on GDU 4XX displays (P4501/4601/4701) are a pin for pin match to the 9-pin connector on AXIS flight displays (J1011), with the exception of pin 3. Like G3X Touch installations, this connector can be used to connect to the 9-pin connector of a GSU 25 or GEA 24.

NOTE

The serial port on P4X02 is hardcoded for the backup path to a GEA 24 or GSU 25. In AXIS flight displays, this is Serial port 6 and must be assigned to the relevant unit when configuring the AXIS flight display system.

NOTE

Pin 3 of this connector was marked as reserved and unused in the G3X Touch. This pin is used to provide an optional connection to the aircraft battery in AXIS flight display systems, to support automated database updates in aircraft with regular access to hangar WiFi in their storage location. A switch for this connection can be used to disrupt power to this input, if the aircraft is to be stored for any extended period of time. Refer to figure B-1.1 for specific wiring guidance.

F.2.5.3.3 AXIS Flight Display Connector J1012

The 50-pin connector of the G3X Touch (P4502/4602/4702) display must be modified before connecting to an AXIS flight display (J1012). Table F-3 provides a 1:1 map of the G3X Touch 50-pin connector to the AXIS flight display 50-pin connector.

Altogether, 33-pin assignments remain unchanged between the G3X Touch P4X02 connector and AXIS flight display J1012 connector. Nine pins are assigned functions in J1012, that were unused and reserved for future use in G3X Touch. Up to eight pins may require reassignment, mainly to support the new HSDB architecture. At minimum, those pins which were reassigned (pins 2, 3, 9, 10, 19, 20, 38, 39) must be removed from the G3X Touch connector, if they were populated in the G3X Touch installation. These pins may be repopulated with a new pin, if the new function of the pin is necessary to accommodate the AXIS flight display installation.

Table F-3 G3X Touch P4502/4602/4702 and AXIS J1012 Connector

Pin	G3X Touch P4502/4602/4702 Connector	AXIS J1012 Connector	Notes
1	MONO AUDIO OUT HI	MONO AUDIO OUT HI	[1] [2]
2	STEREO AUDIO OUT LO	HSDB TX 1 B	[3] [4]
3	STEREO AUDIO OUT LEFT	HSDB TX 1 A	[3] [4]
4	SPARE	HSDB TX 2 B	[5]
5	SPARE	HSDB TX 2 A	[5]
6	DO NOT USE	HSDB RX 2 B	[5]
7	DO NOT USE	HSDB RX 2 A	[5]
8	DO NOT USE	TEST MODE	[5]
9	CDU SYSTEM ID PROGRAM 2	POWER GROUND	[3] [6]
10	CDU SYSTEM ID PROGRAM 1	POWER GROUND	[3] [6]
11	RESERVED	POWER INPUT	[5]
12	RESERVED	POWER INPUT	[5]
13	RS-232 OUT 3	RS-232 OUT 3	[1]
14	RS-232 IN 2	RS-232 IN 2	[1]
15	POWER GROUND	POWER GROUND	[1]
16	POWER GROUND	POWER GROUND	[1]
17	CONFIG MODULE POWER OUT	CONFIG MODULE POWER OUT	[1]
18	MONO AUDIO OUT LO	MONO AUDIO OUT LO	[1] [2]
19	STEREO AUDIO OUT RIGHT	HSDB RX 1 B	[3] [4]
20	STEREO AUDIO OUT LO	HSDB RX 1 A	[3] [4]
21	RESERVED	HSDB TX 3 B	[5]
22	RESERVED	HSDB TX 3 A	[5]
23	RS-232 IN 4	RS-232 IN 4	[1]
24	RS-232 IN 5	RS-232 IN 5	[1]
25	CDU SYSTEM ID PROGRAM 3	REVERSIONARY	[1] [7]
26	28V LIGHTING BUS HI	LIGHTING BUS HI	[1]
27	SIGNAL GROUND	SIGNAL GROUND	[1]
28	CAN BUS TERMINATION	CAN BUS TERMINATION	[1]
29	RS-232 IN 3	RS-232 IN 3	[1]
30	RS-232 OUT 2	RS-232 OUT 2	[1]
31	AIRCRAFT POWER 2	POWER INPUT	[1]
32	AIRCRAFT POWER 1	POWER INPUT	[1]

Pin	G3X Touch P4502/4602/4702 Connector	AXIS J1012 Connector	Notes
33	CONFIG MODULE CLOCK	CONFIG MODULE CLOCK	[1]
34	SIGNAL GROUND	SIGNAL GROUND	[1]
35	SIGNAL GROUND	SIGNAL GROUND	[1]
36	SIGNAL GROUND	SIGNAL GROUND	[1]
37	SIGNAL GROUND	SIGNAL GROUND	[1]
38	CDU SYSTEM ID PROGRAM 5	HSDB RX 3 B	[3] [6]
39	CDU SYSTEM ID PROGRAM 6	HSDB RX 3 A	[3] [6]
40	RS-232 OUT 4	RS-232 OUT 4	[1]
41	RS-232 OUT 5	RS-232 OUT 5	[1]
42	CDU SYSTEM ID PROGRAM 4	DEMO MODE	[1] [7]
43	14V LIGHTING BUS HI	LIGHTING BUS HI	[1]
44	SIGNAL GROUND	SIGNAL GROUND	[1]
45	CAN BUS LO	CAN BUS LO	[1]
46	CAN BUS HI	CAN BUS HI	[1]
47	RS-232 IN 1	RS-232 IN 1	[1]
48	RS-232 OUT 1	RS-232 OUT 1	[1]
49	CONFIG MODULE GROUND	CONFIG MODULE GROUND	[1]
50	CONFIG MODULE DATA	CONFIG MODULE DATA	[1]

[1] No change to pin assignment from G3X Touch.
[2] May need to be added, if stereo audio was previously used.
[3] Pin location reassigned for AXIS flight display.
[4] If stereo audio out is not used, this pin will be empty.
[5] Pin unused in G3X Touch, used in AXIS flight display.
[6] Depending on GDU Display ID in the G3X Touch system, this pin may be empty.
[7] These represent the same function.

F.2.5.3.4 Audio Output Pins

If stereo audio was used as the audio path in the G3X Touch installation, all related pins must be removed, and some must be moved to the MONO audio output. This will also require a wiring change on the interfacing audio panel connector.

F.2.5.3.5 Configuration Module

The G3X Touch configuration module is not compatible with AXIS flight displays. As part of this upgrade, the configuration module in the PFD1 connector must be replaced with the AXIS flight display configuration module (011-04037-00), no wiring changes are required for this. Additionally, every other display in the system must be wired for and install an AXIS configuration module (011-04038-00).

F.2.5.3.6 Main Unit Power

HThe G3X Touch 50-pin connector (P4502/4602/4702) included two power inputs. AXIS flight display units include four power inputs on this connector. All four power and ground connections should be connected to the aircraft electrical system, as shown in appendix B. It is acceptable to use one of these power inputs for a connection to a backup battery, if equipped. If the second power input in a G3X Touch display was connected to a GAD 27 to utilize the keep alive function, this connection should be removed and replaced with a connection to the aircraft electrical system. Refer to section 3.4 for AXIS display power requirements.

F.3 Preparing G3X Touch System to Upgrade to AXIS Flight Display

F.3.1 Objective

It is important to accurately record and back up the configuration of the G3X Touch system, to ensure a smooth transition to the AXIS flight display system. Completing the steps in this section will ensure labor-intensive calibrations and configurations like fuel quantity calibration and EIS gauge configuration are not lost upon the installation of AXIS.

F.3.2 Export Configuration File

Prior to initiating the AXIS fight display upgrade, export a copy of the G3X Touch configuration file. Use the procedure described in section 5.9.3, of the G3X/G3X Touch Avionics Installation Manual, Revision AZ. It is recommended to then copy the file to your PC to ensure successful preservation of G3X Touch configuration.

F.3.3 Export Fuel Calibration

CAUTION

Failure to record fuel calibration data from your G3X Touch system will result in needing to perform a new fuel calibration procedure. If your G3X Touch system has been calibrated to display fuel level – PLEASE perform the following steps to ensure that your fuel calibration is saved!

NOTE

Garmin recommends an 8 GB SanDisk® brand SD card for GDU 4XX units. SD or SDHC cards up to 32 GB using the FAT32 file format are supported, SDXC and SDUC cards are not supported.

1. Insert an SD card into the G3X Touch display.
2. Access the G3X Touch configuration mode by powering on the display while holding the **MENU** key located on the display bezel.
3. From configuration mode, select **Engine & Airframe**.

Four dedicated fuel calibration curves are supported in the G3X Touch system. Fuel Calibration curves, if configured, are stored under one (or all) of the following pages from within the GEA 24 Inputs section: Fuel 1, Fuel 2, GP 3/Fuel 3, and GP 4/Fuel 4.

4. Select **Fuel 1** from within the list of GEA 24 Inputs.
5. From the bottom right corner of the page, touch **Calibrate** to open the Fuel Calibration curve.
6. To access the flight-attitude fuel calibration curve, touch **Flight**.
7. Ensure you have an SD card inserted into the G3X Touch display.
8. Press **Menu**.

Two options appear in the lower right corner of the screen: “Read Calibration File” and “Write Calibration File.”

9. Press **Write Calibration File** to load the selected Fuel Calibration Curve onto the SD card.
10. A “Calibration data saved” popup appears upon successful download of the Fuel Calibration curve to your SD card.
11. Touch **OK.**
12. Touch **Ground** (if configured) to access the ground-attitude fuel calibration curve.

13. Save the ground-attitude fuel calibration curve using the same procedure.
14. Once both Flight and Ground (if configured) calibration curves have been saved, touch **Cancel**.
15. Touch **Cancel** again.
16. Return to step 4 above to save each configured Fuel Calibration curve in your system.
17. Once all Fuel Calibration curves have been saved, remove the SD card and transfer the files to a safe location.

F.3.4 Record G3X Touch Configuration

It is important to take careful note of all G3X Touch configuration settings. This will ensure important configuration items like autopilot gains and EIS gauge configuration are easy to enter into AXIS configuration mode.

NOTE

The use of pictures or video can be a helpful tool to record all configuration settings.

F.4 Update Software on External LRUs

For many external LRUs to be interfaced with the AXIS flight display system, it is important to update software to the most recent version, prior to initiating the AXIS flight display upgrade procedure. Failure to update software on these units will result in the failure of the AXIS flight display to communicate with the LRU. The units listed in table F-4 must be updated to the stated versions to ensure compatibility with the AXIS flight display system.

Table F-4 LRU Minimum Software Versions

LRU	Minimum Software Version
GI 275	v3.50
GTN Xi	v21.11
GPS 175/GNC 355/GNX 375	v3.30
GNC 215	v2.31
GTX	v2.90/v3.62
GTS 8X0/8X5	v2.02/v3.14.1

F.4.1 HSDB Navigator Position Assignment

For navigators connected to the system via HSDB, select the appropriate Unit ID or System ID in configuration mode of each unit. Unit ID is used for GI 275 or GNC 215, while System ID is used for GTN Xi, GNX 375, GNC 355, GPS 175.

For the purposes of configuration in AXIS, a navigator's System ID / Unit ID is used to specify what position the functions of that unit will assume in the AXIS flight display system. For example, GTN Xi UNIT ID 1 will be represented as GPS1/NAV1/COM1 in the AXIS flight display system. Refer to section 5.3.1.2 for more specific information on this topic.

Generally, it is best to match the System ID to the position which the COM and NAV portions of the interfacing LRU occupy on the Audio panel, to avoid any further re-wiring of those pre-existing audio connections.

F.4.2 Other LRU Position Assignment Considerations

GTR 20, 200, 200B, and 205R(x) radios use physical pin straps on the connector identify the radio as COM1 or COM2. This must be accounted for in the configuration steps that follow. Whatever position the GTR radio used in the G3X Touch installation, is a good indication of what the radio is strapped for. Appendix C provides complete interfacing LRU configuration information to establish communication with the AXIS system.

F.5 AXIS Flight Display Fitment

1. Remove G3X Touch displays from the aircraft.
2. As a byproduct of the physical installation of the displays, a GSU 25 ADAHRS unit that was mounted directly to a G3X Touch display will need to be rotated in order to be mounted to the AXIS flight display. This should be completed as part of this section of the procedure.
   a. If the GSU 25 ADAHRS was mounted directly to the G3X Touch display, the display's P4X01 connector was often used to connect to the GSU 25 J251 connector. This is supported in an AXIS installation, using J1011 of the AXIS flight display. The existing harness may need to be extended or replaced to ensure sufficient length is available to connect the two units. The same is also for true for Pitot, static, or AOA (optional) pneumatic lines connected to the ADAHRS unit.
3. Install AXIS flight display(s) in the instrument panel. Any modifications to the instrument panel necessary for the fitment of the AXIS flight display units should be completed at this step.
   a. Ensure 50-pin connector of the existing harness can reach the AXIS flight display unit (J1012) with a sufficient maintenance loop once the unit is seated in its final installation position. If it cannot, the J1012 connector harness must be modified to ensure sufficient length is available to connect the two units.
4. Remove AXIS flight display(s) from the instrument panel.

F.6 Make Wiring Harness Modifications

Complete necessary modifications to wiring harness, as determined in section F.2.5.

F.7 Wire Harness Mounting, Continuity and Power Checks

Prior to applying power to the AXIS flight display system and supporting equipment, the wire harnesses must be checked for proper connections to the aircraft systems and other avionics equipment. Perform the following:

1. Verify that all wire harnesses are properly secured, and shield grounds are properly grounded to the shield blocks of the connectors, as applicable.
2. Perform a pin-to-pin continuity check of the AXIS flight display wire harnesses to expose any faults such as shorting to ground.
3. Correct any faults or discrepancies found before proceeding.
4. Perform power and ground checks including lighting inputs.
5. Remove power from the aircraft upon completion of the wire harness checkout.
6. Install the AXIS flight displays.

F.8 Configure AXIS Flight Display

Once the AXIS flight display system components are installed on the aircraft and wiring harness installation is complete, the system must be configured for operation.

Reference section 5 to complete this step.

Use the documents completed in section F.3.4, as well as the device list recorded in section F.2.4.2 as a reference for this process.

NOTE

AXIS configuration uses a different method to specify system port assignment than G3X Touch. In place of dedicated RS-232 and ARINC 429 port assignment menus, each device is added to the system one by one, and any necessary interfacing configuration to establish communication with the LRU is established during this step, using the Devices Application. Reference the information provided in appendix C for each device being added to the system, for detailed configuration considerations.

F.9 Import Fuel Calibration

Refer to section 5.5.2.2.10.1 for a description of the process to import the fuel calibration files exported from G3X Touch earlier in this procedure.

F.10 Calibrate ADAHRS and Magnetometer

This step is only required if a GSU 25 was relocated to the AXIS flight display or another location in the aircraft as a result of the AXIS flight display installation. Reference section 6.3 through section 6.7 to complete this step.

NOTE

If any ADAHRS unit in the aircraft was relocated or re-mounted, ensure the orientation setting is correct in the CAL application, within AXIS Configuration mode, and perform a new ADAHRS Pitch/Roll Calibration and Engine Vibration test. If any ADAHRS unit in the aircraft is calibrated, all ADAHRS units must be calibrated at the same time. In addition, a magnetometer calibration must be performed any time a new ADAHRS Pitch/Roll Calibration is performed.

F.11 Update Databases

Refer to *AXIS Flight Display Pilot's Guide* (P/N 190-03123-01).

F.12 Perform Autopilot On Ground Test

Reference section 6.14 to complete this step.

This should be performed for all installations which include GFC 500X autopilot components.

WARNING

To ensure directional movement is correct and servo torque is appropriate, it is critical that the autopilot on ground test is successful prior to engaging the autopilot in an AXIS upgrade installation.

F.13 Initial Autopilot Engagement In-Air

After performing a successful on-ground autopilot checkout, and confirming servo and trim motor direction, and torque values, the autopilot can be used in flight.

At a minimum, adhere to the following safety guidelines before initial autopilot engagement:

- Quick access to autopilot disconnect
- Safe altitude above and away from all terrain and obstacles
- No air traffic in the area
- Safe airspeed below maneuvering speed (VA)

Upon initial engagement, if there are any pitch or roll oscillations or aggressive responses, disengage the autopilot immediately, and review section 6.14 before completing appendix D.

F.14 Perform In-Flight AOA Calibration

Refer to section 6.13 to complete this step.

F.15 Export Configuration

When the system is completely configured and calibrated, export a configuration file using the process described in section 5.9.3.1. In addition, export a a configuration summary using the procedure described in section 5.9.3.3. This ensures a reliable record of system configuration is available if a system restoration is needed in the future.

APPENDIX G LRU PERFORMANCE SPECIFICATIONS/LICENSING/ COMPLIANCE

G.1 GAD 29 ..... G-2
G.2 GAP 26 ..... G-2
G.3 GDU 116(B)(C)(NC) G-2
G.3.1 Display Specifications G-2
G.3.2 IFR GPS/SBAS Specifications G-3
G.3.3 COM Specifications (COM and NAV/COM) G-4
G.3.4 VOR Specifications (NAV/COM) G-6
G.3.5 LOC Specifications (NAV/COM) G-7
G.3.6 Glideslope Specifications (NAV/COM) G-8
G.4 GEA 24 Engine Interface Module G-9
G.5 GHA 15 ..... G-9
G.5.1 Certification G-9
G.5.2 Transmitter Grant of Equipment Authorization G-9
G.5.3 General Specifications G-9
G.5.4 Performance Specifications G-10
G.6 GMA 245/245R Audio Panel G-11
G.6.1 Certification G-11
G.6.2 Transmitter Grant of Equipment Authorization G-11
G.7 GMC 305/307/507 ..... G-12
G.7.1 Environmental Specifications G-12
G.8 GMU 11 ..... G-12
G.8.1 Environmental Specifications G-12
G.9 GMU 22 ..... G-12
G.9.1 Environmental Specifications G-12
G.10 GSA 28 ..... G-12
G.10.1 Environmental Specifications G-12
G.11 GSU 25 ..... G-13
G.11.1 Environmental Specifications G-13
G.11.2 Performance Information G-14
G.12 GSU 73 ..... G-14
G.12.1 Environmental Specifications G-14
G.12.2 Performance Information G-15
G.13 GTP 59 ..... G-15
G.13.1 TSO/ETSO Compliance G-15
G.13.2 TSO/ETSO Deviations G-15
G.14 GTR 20/200 ..... G-16
G.14.1 Environmental Specifications G-16
G.14.2 License Requirements G-16
G.14.3 Aircraft Radio G-16
G.14.4 Certification G-16
G.14.5 FCC Grant of Equipment Authorization G-16
G.14.6 Industry Canada Compliance G-16

This section contains various performance specification, licensing, and compliance info for the AXIS flight display LRUs.

G.1 GAD 29

G.1.1 Environmental Specifications

The GAD 29 has an Operating Temperature Range of -45° C to +70° C.

G.2 GAP 26

G.2.1 Environmental Specifications

The GAP 26 has an Operating Temperature Range of -55° C to 240° C.

G.3 GDU 116(B)(C)(NC)

G.3.1 Display Specifications

Table G-1 GDU 116( ) Specifications

Characteristics	Specification
Active display size	256 mm x 144 mm
Display format	1920 pixels (W) x 1080 pixels (H)
Viewing distance	12” to 30” from display
Viewing angle	Left: 45° Right: 45° Up: 30° Down: 30°

G.3.2 IFR GPS/SBAS Specifications

Table G-2 IFR GPS/SBAS Specifications

Characteristics	Specifications
Number of channels	15 (12 GPS and 3 GPS/WAAS/SBAS)
Frequency	1575.42 MHz L1, C/A code
Sensitivity (acquisition, no interference)	-134.5 dBm GPS
	-135.5 dBm SBAS/WAAS
Sensitivity (drop lock)	-144 dBm
Dynamic range	> 20 dB
LAT/LON position accuracy	<1.25 meter RMS horizontal, <2 meter vertical, with SBAS <2.5 meter RMS horizontal, <4 meter vertical, without SBAS
Velocity	1,166 knots (600 m/s) maximum
TTFF (Time To First Fix)	1:45 min. typical with current almanac, position, and time
Reacquisition	10 seconds typical
Position update interval	0.2 sec (5 Hz)
1 PPS (Pulse Per Second)	±275 nsec of UTC second
Datum	WGS-84
SATCOM compatibility	SATCOM compatibility is dependent upon antenna selection.
Antenna power supply	35 mA typical, 40 mA max at 4.7 VDC

G.3.3 COM Specifications (COM and NAV/COM)

Table G-3 COM Transmitter Specifications

Characteristics	Specifications
Classes	3, 4, 5, 6
Microphone input	Two inputs, standard carbon or dynamic MIC with integrated preamp providing minimum 70 mVRMS into 600 Ω load.
Modulation capability	Nominal 90% with 40 to 1500 mVRMS microphone input at 1000 Hz.
Modulation	AM double-sided Emission Designator: 6K00A3E (118 – 136.975 MHz) 5K60A3E (118 – 136.992 MHz)
Frequency range	118.000 to 136.975 MHz, 25 kHz channel spacing 118.000 to 136.992 MHz, 8.33 kHz channel spacing
Frequency tolerance	±2ppm from -40 °C to +70 °C
Output power	10 watts minimum
Duty cycle	100%
Carrier noise level	At least 35 dB (SNR).
Stuck mic time-out	30 seconds time-out, reverts to receive
Demodulated audio distortion	Less than 5% distortion when the transmitter is at 90% modulation at 350 to 2500 Hz.

Table G-4 COM Receiver Specifications

Characteristics	Specifications
Classes	C, E, H1, and H2
Frequency range	118.000 to 136.975 MHz, 25 kHz channel spacing 118.000 to 136.992 MHz, 8.33 kHz channel spacing
Headset audio output	Up to 65 mW into a 500 Ω load
Speaker audio output	Up to 12 W into a 4 Ω load.
Audio response	Less than 6 dB of variation between 350 Hz and 2500 Hz.
Audio distortion	Less than 12% at rated output power.
AGC characteristics	Less than 3 dB of variation in the audio output from -93 to -13 dBm (power absorbed by a 50 Ω load).
Sensitivity	SINAD on all channels is greater than 6 dB when the RF level is -107 dBm (power absorbed by a 50 Ω load) modulated 30% at 1000 Hz at rated audio output power.
Squelch	Automatic squelch with manual override.

Characteristics	Specifications
Selectivity	6 dB BW is greater than ±8 kHz for 25 kHz channeling. 60 dB BW is less than ±25 kHz for 25 kHz channeling. 6 dB BW is greater than ±2.78 kHz for 8.33 kHz channeling. 60 dB BW is less than ±7.37 kHz for 8.33 kHz channeling.

G.3.4 VOR Specifications (NAV/COM)

Table G-5 VOR Specifications

Characteristics	Specifications
Receiver audio sensitivity	At -103.5 dBm (S+N)/N is not less than 6 dB.
Bearing accuracy	-103.5 dBm or less for ± 2.0° of bearing error.
Flag	The VOR course deviation flag indicates in the event of any of the following conditions: • Level of a standard VOR deviation signal produces less than 50% of standard deflection • RF signals are absent • The 9960 Hz modulation is absent • Either one of the two 30 Hz modulations are absent
AGC characteristics	From -99 dBm to -13 dBm input of a Standard Audio Test Signal, audio output level does not vary more than 3 dB.
Spurious response	Greater than 60 dB
VOR bearing accuracy	The bearing information as presented to the pilot does not have an error in excess of 2.7° with 99.7% probability.
Audio output	Up to 65 mW into a 500 Ω load.
Audio response	Less than 6 dB of variation between 350 and 2500 Hz. In voice mode, an IDENT tone of 1020 Hz Ident Tone is attenuated at least 20 dB.
Audio distortion	Less than 10% at all audio output levels up to 65 mW.
FM immunity	Meets FM interference immunity performance requirements of ICAO annex 10, volume I, paragraph 3.3.8.

G.3.5 LOC Specifications (NAV/COM)

Table G-6 LOC Specifications

Characteristics	Specifications
Receiver audio sensitivity	At -103.5 dBm (S+N)/N is not less than 6 dB.
Course deviation sensitivity	At -103.5 dBm, deviation output is not to be less than 60% of standard deflection when a LOC deviation test signal is applied.
Flag	The LOC course deviation flag indicates in the event of any of the following conditions: • Level of a standard LOC deviation test signal produces 50% or less of standard deflection of the deviation indicator • 150 Hz modulation is absent • 90 Hz modulation is absent • 90 Hz and 150 Hz modulation are both absent • RF signals are absent
AGC characteristics	From -99 dBm to -13 dBm input of a Standard Audio Test Signal, audio output level does not vary more than 3 dB.
Selectivity	6 dB BW is greater than ±15 kHz 43 dB BW is less than ±50 kHz
Standard deflection	With a standard deflection FLY LEFT condition (150 Hz dominant), the output is +90 mV ± 9 mV. With a standard deflection FLY RIGHT condition (90 Hz dominant), the output is -90 mV ± 9 mV.
Spurious response	Greater than 60 dB.
Centering accuracy	0 ±0.01023 ddm or 0 ±9.9 mV.
Audio output	Up to 65 mW into a 500 Ω load.
Audio response	Less than 6 dB of variation between 350 and 2500 Hz. In voice mode, an IDENT tone of 1020 Hz IDENT Tone is attenuated at least 20 dB.
Audio distortion	Less than 10% at all audio output levels up to 65 mW.
FM immunity	Meets FM interference immunity performance requirements of ICAO annex 10, volume I, paragraph 3.1.4.

G.3.6 Glideslope Specifications (NAV/COM)

Table G-7 Glideslope Specifications

Characteristic	Specifications
Sensitivity	-87 dBm or less for 60% of standard deflection.
Centering accuracy	0 ±0.01183 ddm or 0 ±10.14 mV
Selectivity	6 dB BW is greater than ±17 kHz 60 dB BW is less than ±126.33 kHz
Standard deflection	With a standard deflection FLY DOWN condition (90 Hz dominant), the output is -78 mV ±7.8 mV. With a standard deflection FLY UP condition (150 Hz dominant), the output is +78 mV ±7.8 mV.
Flag	The vertical deviation flag indicates in the event of any of the following conditions: • Level of a standard glideslope deviation test signal produces 50% or less of standard deflection of the deviation indicator • 150 Hz modulation is absent • 90 Hz modulation is absent • 90 Hz and 150 Hz modulations are both absent • RF signals are absent
Spurious response	Greater than 60 dB.

G.4 GEA 24 Engine Interface Module

G.4.1 Environmental Specifications

The GEA 24 has an Operating Temperature Range of -45°C to +70°C.

G.5 GHA 15

G.5.1 Certification

The Garmin GHA 15 Height Advisor (011-05259-50) is not a TSO-certified product and has received no FAA approval or endorsement. Refer to the GHA 15 Important Safety and Product Information (190-02680-10) for further compliance information.

G.5.2 Transmitter Grant of Equipment Authorization

Table G-8 Transmitter Grant of Equipment Authorization

Country (Telecommunications Authority)	Authorization
United States (FCC)	FCC ID: IPH-04099
Canada (ISED)	IC: 1792A-04099 IC M/N: GMN-01410-01

RF Exposure Compliance Statement

This equipment complies with FCC radiation exposure limits set forth for an uncontrolled environment. This equipment should be installed and operated with minimum distance 20 cm between the radiator and your body. This transmitter must not be co-located or operating in conjunction with any other antenna or transmitter.

G.5.3 General Specifications

Table G-9 General Specifications

Characteristics	Specifications
Operational Temperature Range	-45° C to +70° C
Altitude Range	25,000 ft maximum
Maximum Days of Continuous Operation	49

G.5.4 Performance Specifications

Table G-10 Performance Specifications

Characteristics	Specifications
Altitude Accuracy	± 1.5 ft (3 - 100 ft AGL) ± 2 % (> 100 - 500 ft AGL)
Altitude Range	0 - 500 ft AGL
Transmitter Output	Frequency: 24.05-24.25 GHz Power: 12.7 dBm nominal
Horizontal Velocity	0 - 100 knots maximum
Vertical Velocity	20 ft/sec maximum (up to 100 ft AGL) 25 ft/sec maximum (above 100 ft AGL)
Pitch Angle	± 20° maximum
Roll Angle	± 20° maximum

G.6 GMA 245/245R Audio Panel

G.6.1 Certification

The Garmin GMA 245/245R Audio Panel is not a TSO-certified product and has received no FAA approval or endorsement. Refer to the *GMA 245 Pilot's Guide (190-01879-10)* and the *GMA 245/245R Installation Manual (190-01879-11)* for further compliance information.

G.6.2 Transmitter Grant of Equipment Authorization

1. FCC

011-03519-00, 011-03784-00, and 011-03784-10 contain FCC ID: QOQWT32I
011-03519-01, 011-03784-01, and 011-03784-11 contain FCC ID: 2ADHKBM83SM1

NOTE

This device complies with part 15 of the FCC Rules. Operation is subject to the following two conditions:

1. This device may not cause harmful interference, and (2) this device must accept any interference received, including interference that may cause undesired operation.
2. This equipment has been tested and found to comply with the limits for a Class B digital device, pursuant to part 15 of the FCC Rules. These limits are designed to provide reasonable protection against harmful interference in a residential installation. This equipment generates, uses and can radiate radio frequency energy, and if not installed and used in accordance with the instructions, may cause harmful interference to radio communications. However, there is no guarantee that interference will not occur in a particular installation. If this equipment does cause harmful interference to radio or television reception, which can be determined by turning the equipment off and on, the user is encouraged to try to correct the interference by one or more of the following measures:
    - Reorient or relocate the receiving antenna
    - Increase the separation between the equipment and receiver
    - Connect the equipment into an outlet on a circuit different from that to which the receiver is connected
    - Consult the dealer or an experienced radio/TV technician for help

FCC RF Radiation Exposure Statement:

This equipment complies with FCC radiation exposure limits set forth for an uncontrolled environment. This equipment should be installed and operated with minimum distance 20mm between the radiator and your body. This transmitter must not be co-located or operating in conjunction with any other antenna or transmitter.

2. IC

011-03519-00, 011-03784-00, and 011-03784-10 contain IC: 5123A-BGTWT32I
011-03519-01, 011-03784-01, and 011-03784-11 contain IC: 20266-BM83SM1

NOTE

This device complies with Innovation, Science and Economic Development Canada license-exempt RSS standard(s). Operation is subject to the following two conditions: (1) this device may not cause interference, and (2) this device must accept any interference, including interference that may cause undesired operation of the device.

Cet appareil est conforme aux normes RSS sans licence du ministére Innovation, Sciences et Développement économique Canada. Son fonctionnement est soumis aux deux conditions suivantes : (1) ce périphérique ne doit pas causer d'interférences et (2) doit accepter toute interférence, y compris les interférences pouvant entraîner un fonctionnement indésirable de l'appareil.

G.7 GMC 305/307/507

G.7.1 Environmental Specifications

Table G-11 GMC 305/307/507 Environmental Specifications

Characteristics	Specifications
Operating Temperature Range (GMC 305/307)	-45°C to +70°C
Operating Temperature Range (GMC 507)	-20°C to +55°C
Humidity (GMC 305/307/507)	95% non-condensing
Altitude Range (GMC 305/307)	-1,500 ft to 55,000 ft
Altitude Range (GMC 507)	-1,500 ft to 25,000 ft

G.8 GMU 11

G.8.1 Environmental Specifications

Table G-12 GMU 11 Environmental Specifications

Specification	Characteristic
Operating Temperature Range	-55° C to +70° C
Altitude	55,000 ft

G.9 GMU 22

G.9.1 Environmental Specifications

Table G-13 GMU 22 Environmental Specifications

Specification	Characteristic
Regulatory Compliance	RTCA/DO-160D Environmental Conditions and EUROCAE/ED-14D
Operating Temperature Range	-55° C to +70° C
Altitude	55,000 Feet

G.10 GSA 28

G.10.1 Environmental Specifications

Table G-14 GSA 28 Environmental Specifications

Characteristic	Specification
Aircraft Pressure Altitude Range	-1,400 feet to 30,000 Feet
Unit Operating Temperature Range	-45°C to +70°C

G.11 GSU 25

G.11.1 Environmental Specifications

Table G-15 lists general environmental specifications for the GSU 25. Table G-17 lists general environmental specifications for the GSU 25D.

Table G-15 GSU 25/25C Environmental Specifications

Characteristic	Specification
Aircraft Pressure Altitude Range	-1,400 feet to 30,000 Feet
Aircraft Vertical Speed Range	-20,000 feet per minute to +20,000 feet per minute
Aircraft Airspeed Range	300 Knots Indicated Airspeed
Aircraft Mach Range	<1.00 Mach
Aircraft Total Air Temperature Range	-85° C to +85° C
Unit Operating Temperature Range	-45° C to +70° C

Table G-16 GSU 25B and 25D Non-MOD 1 Environmental Specifications

Characteristic	Specification
Aircraft Pressure Altitude Range	-1,400 feet to 30,000 Feet
Aircraft Vertical Speed Range	-20,000 feet per minute to +20,000 feet per minute
Aircraft Airspeed Range	465 Knots Indicated Airspeed
Aircraft Mach Range	<1.00 Mach
Aircraft Total Air Temperature Range	-85° C to +85° C
Unit Operating Temperature Range	-45° C to +70° C

Table G-17 GSU 25D Environmental Specifications (011-02929-51 MOD Level 1 or 011-02929-56)

Characteristic	Specification
Aircraft Pressure Altitude Range	-1,400 feet to 55,000 Feet
Aircraft Vertical Speed Range	-20,000 feet per minute to +20,000 feet per minute
Aircraft Airspeed Range	465 Knots Indicated Airspeed
Aircraft Mach Range	<1.00 Mach
Aircraft Total Air Temperature Range	-85° C to +85° C
Unit Operating Temperature Range	-45° C to +70° C

G.11.2 Performance Information

The GSU 25 is capable of maneuvers through a range of 360° in bank and pitch. The rotation rate capability is ±500° per second.

Pitch/roll accuracy is +/- 2°, heading accuracy is 3° in straight and level flight.

Pitch/roll accuracy is 3.5° and heading accuracy is +/-5° under normal dynamic maneuvering (bank < 35°, pitch <15°).

Due to unsuitability of the magnetic fields near the Earth's poles, operational accuracy is unknown in the following regions:

1. North of 72° North latitude at all longitudes
2. South of 70° South latitude at all longitudes
3. North of 65° North latitude between longitude 75° W and 120° W (Northern Canada)
4. North of 70° North latitude between longitude 70° W and 128° W (Northern Canada)
5. North of 70° North latitude between longitude 85° E and 114° E (Northern Russia)
6. South of 55° South latitude between longitude 120° E and 165° E (Region South of Australia and New Zealand)

G.12 GSU 73

G.12.1 Environmental Specifications

Table G-18 lists general environmental specifications.

NOTE

The GSU 73 may require a warm-up period of 15 minutes to reach full air data accuracy (30 minutes if the environmental temperature is less than 0°C).

Table G-18 GSU 73 Environmental Specifications

Characteristic	Specification
Aircraft Pressure Altitude Range	-1,400 feet to 50,000 Feet
Aircraft Vertical Speed Range	-20,000 feet per minute to +20,000 feet per minute
Aircraft Airspeed Range	450 Knots
Aircraft Mach Range	<1.00 Mach
Aircraft Total Air Temperature Range	-85° C to +85° C
Unit Operating Temperature Range	-40° C to +70° C
Max Outer Case Temperature	+73° C

G.12.2 Performance Information

The GSU 73 is capable of maneuvers through a range of 360° in bank and pitch. The rotation rate capability is ±200° per second.

Bank error and pitch error are within ±1.25° over the range of 30° bank, left and right, and 15° pitch nose up and nose down. Heading is accurate to within 2° in straight and level flight.

Due to unsuitability of the magnetic fields near the Earth's poles, operational accuracy is unknown in the following regions:

1. North of 72° north latitude at all longitudes
2. South of 70° south latitude at all longitudes
3. North of 65° north latitude between longitude 75° W and 120° W (Northern Canada)
4. North of 70° north latitude between longitude 70° W and 128° W (Northern Canada)
5. North of 70° north latitude between longitude 85° E and 114° E (Northern Russia)
6. South of 55° south latitude between longitude 120° E and 165° E (Region south of Australia and New Zealand)

G.13 GTP 59

G.13.1 TSO/ETSO Compliance

The following table provides a list of applicable TSO/ETSOs for the GTP 59.

Table G-19 Applicable TSO/ETSOs for the GTP 59

Function	TSO/ETSO	Applicable LRU SW Part Numbers	Applicable CLD Part Numbers
Air Data Computer	TSO-C106 ETSO-C106	Not Applicable	Not Applicable

G.13.2 TSO/ETSO Deviations

The following deviations have been requested and granted for the GTP 59.

Table G-20 TSO/ETSO Deviations for the GTP 59

TSO/ETSO	Deviation
TSO-C106	1. Garmin was granted a deviation from TSO-C106 to use RTCA DO-160D, including changes 1, 2, and 3, instead of RTCA DO-160B as the standard for Environmental Conditions and Test Procedures for Airborne Equipment.
	2. Garmin was granted a deviation from TSO-C106 to use Society of Automotive Engineers (SAE) AS 8002 Rev A instead of SAE AS 8002 as the Minimum Performance Standard.
ETSO-C106	1. Garmin was granted a deviation from ETSO-C106 to use Society of Automotive Engineers (SAE) AS 8002 Rev A instead of SAE AS 8002 as the Minimum Performance Standard.

G.14 GTR 20/200

G.14.1 Environmental Specifications

Table G-21 lists general environmental specifications.

Table G-21 GTR 20/200 Environmental Specifications

Characteristic	Specification
Operating Temperature Range	-20°C to +55°C
Humidity	95% non-condensing
Altitude Range	-1,500 ft to 55,000 ft

G.14.2 License Requirements

The Telecommunications Act of 1996, effective February 8, 1996, provides the FCC discretion to eliminate radio station license requirements for aircraft and ships. GTR 20/200 installations must comply with current transmitter licensing requirements. In the US, to find out the specific details on whether a particular installation is exempt from licensing, please visit the FCC website: www.fcc.gov/wireless/bureau-divisions/mobility-division/aviation-radio-services. If an aircraft license is required, make application for a license on FCC form 404, Application for Aircraft Radio Station License. The FCC also has a fax-on-demand service to provide forms by fax. Outside the US, contact the responsible telecommunication authority. The GTR 20/200 owner accepts all responsibility for obtaining the proper licensing before using the transceiver.

G.14.3 Aircraft Radio

An aircraft radio station license is not required when operating in U.S. airspace, but may be required when operating internationally.

G.14.4 Certification

The GTR 20/200 does not have TSO authorization.

G.14.5 FCC Grant of Equipment Authorization

Table G-22 FCC Grant of Equipment Authorization

Model	FCC ID	IC ID
GTR 20/200	IPH-0211501	1792A-0211501

G.14.6 Industry Canada Compliance

The GTR 20/200 device complies with Industry Canada licence-exempt RSS standard(s). Operation is subject to the following two conditions: (1) this device may not cause interference, and (2) this device must accept any interference, including interference that may cause undesired operation of the device.

APPENDIX H RS-232 TEXT OUTPUT FORMAT

H.1 Electrical Interface H-1
H.2 Message Output Selection H-1
H.3 General Message Output Format H-1
H.4 Attitude/Air Data Message Format H-2
H.5 Engine Data Message Format H-4
H.6 GPS Data Message Formats H-6
H.7 EIS Complete Data Message Format H-8
H.7.1 EIS Parameter Information H-8
H.7.2 EIS Discrete Parameter Data H-9
H.7.3 EIS Numeric Parameter Data H-10
H.8 CNI Message Format H-11

This data is output from a AXIS Flight display RS-232 port that has been configured to the “Text Out” format.

H.1 Electrical Interface

The output signals are compatible with RS-232C. Data is generated at 115,200 baud with a word length of 8 bits, one stop bit, and no parity.

H.2 Message Output Selection

Text messages are grouped into categories. Categories may be enabled or disabled in configuration mode. Enabling or disabling one category has no effect on the other categories. Enabling a category will result in all messages of that category being sent out the RS-232 port. This may be one or more messages depending on which category is enabled.

H.3 General Message Output Format

Most text output messages have the following general format:

- Escape character ('=' symbol, 0x3D hex)
- ID character
- Version character
- Data characters (length determined by message ID)
- Checksum - 2-character (1-byte) ASCII hex value that is the simple sum of all previous bytes, including the escape character
- Carriage return (0x0D hex)
- Line feed (0x0A hex)

An exception to the above is the GPS Data message, which is backwards compatible with the Garmin Simple Text Output format described at: http://www8.garmin.com/support/text_out.html.

The GPS Data Message has the following general format:

- Escape character ('@' symbol, 0x40 hex)
- Data characters
- Carriage return (0x0D hex)
- Line feed (0x0A hex)

All text output messages use only printable ASCII characters. For all messages, a value that is out of range, missing, not configured, uncalibrated, or otherwise invalid is indicated by replacing the corresponding bytes within the message with the underscore character ('_', 0x5F hex).

H.4 Attitude/Air Data Message Format

The Attitude/Air Data category contains two message formats. The Attitude/Air Data message format is transmitted approximately 10 times per second. The Attitude/Air Data Set 2 message format is transmitted approximately 2 times per second. Table H-1 and table H-2 explain the message formats.

Table H-1 Attitude/Air Data Message Format

Field Name	Offset	Width	Units	Notes	Min	Max
Escape character	0	1		'='		
Sentence ID	1	1		'1'		
Sentence version	2	1		Currently '1'		
UTC hour	3	2	hours		00	23
UTC minute	5	2	minutes		00	59
UTC second	7	2	seconds		00	59
UTC second fraction	9	2	10 ms		00	99
Pitch	11	4	0.1 degree	positive = up	-900	+900
Roll	15	5	0.1 degree	positive = right	-1800	+1800
Heading	20	3	1 degree	magnetic	000	359
Airspeed	23	4	0.1 knots		0000	9999
Pressure altitude	27	6	1 foot		-01000	+60000
Rate of turn	33	4	0.1 degree/ sec	positive = right	-999	+999
Lateral acceleration	37	3	0.01 G	positive = leftward	-99	+99
Vertical acceleration	40	3	0.1 G	positive = upward	-99	+99
AOA (Angle of Attack)	43	2		00 = AOA below minimum calibrated value 60 = AOA at calibrated warning threshold value 99 = AOA at or above calibrated stall value Min = 00, Max = 99	0	+99
Vertical speed	45	4	10 fpm	positive = up	-999	+999
Outside air temperature	49	3	1 degree C		-99	+99
Altimeter setting	52	3	0.01 inHg	offset from 27.50"	000	400
Checksum	55	2	ASCII hex	sum of all previous bytes		
CR/LF	57	2		0x0D/0x0A		
Total length	59					

Table H-2 Attitude/Air Data Set 2 Message Format

Field Name	Offset	Width	Units	Notes	Min	Max
Escape character	0	1		'='		
Sentence ID	1	1		'2'		
Sentence version	2	1		Currently ‘1’		
UTC hour	3	2	hours		00	23
UTC minute	5	2	minutes		00	59
UTC second	7	2	seconds		00	59
UTC second fraction	9	2	10 ms		00	99
True Airspeed	11	4	0.1 knots		0000	9999
Density Altitude	15	6	1 foot		-01000	+99999
Heading Bug	21	3	1 degree	magnetic	000	359
Altitude Bug	24	6	1 foot		-01000	+99999
Airspeed Bug	30	4	0.1 knots		0000	9999
Vertical Speed Bug	34	4	10 fpm	positive = up	-999	+999
Checksum	38	2	ASCII hex	sum of all previous bytes		
CR/LF	40	2		0x0D/0x0A		
Total length	42					

H.5 Engine Data Message Format

The Engine category contains one message format. The Engine Data message format is transmitted approximately 5 times per second. Table H-3 explains the Engine Data message format.

Table H-3 Engine Data Message Format

Field Name	Offset	Width	Units	Notes	Min	Max
Escape character	0	1		'='		
Sentence ID	1	1		'3'		
Sentence version	2	1		Currently '1'		
UTC hour	3	2	hours		00	23
UTC minute	5	2	minutes		00	59
UTC second	7	2	seconds		00	59
UTC second fraction	9	2	10 ms		00	99
Oil pressure	11	3	1 PSI		000	999
Oil temperature	14	4	1 degree C		-999	+999
RPM	18	4	1 RPM		0000	9999
Unused	22	4				
Manifold pressure	26	3	0.1 inHg		000	600
Fuel flow	29	3	0.1 gallon/ hour		000	999
Unused	32	3				
Fuel pressure	35	3	0.1 PSI		000	999
Fuel quantity 1	38	3	0.1 gallon		000	999
Fuel quantity 2	41	3	0.1 gallon		000	999
Calculated fuel remaining	44	3	0.1 gallon	calculated from fuel computer	000	999
Volts 1	47	3	0.1 V		000	320
Volts 2	50	3	0.1 V		000	320
Amps 1	53	4	0.1 A		-999	+999
Total aircraft time	57	5	0.1 hour		00000	99999
Engine time	62	5	0.1 hour		00000	99999
CHT6	67	4	1 degree C		-999	+999
EGT6	71	4	1 degree C		-999	+999
CHT5	75	4	1 degree C		-999	+999
EGT5	79	4	1 degree C		-999	+999
CHT4	83	4	1 degree C		-999	+999
EGT4	87	4	1 degree C		-999	+999
CHT3	91	4	1 degree C		-999	+999
EGT3	95	4	1 degree C		-999	+999
CHT2	99	4	1 degree C		-999	+999
EGT2	103	4	1 degree C		-999	+999
CHT1	107	4	1 degree C		-999	+999

Table H-3 Engine Data Message Format

Field Name	Offset	Width	Units	Notes	Min	Max
EGT1	111	4	1 degree C		-999	+999
TIT1	115	4	1 degree C		-999	+999
TIT2	119	4	1 degree C		-999	+999
Elevator trim position	123	5	1% of travel	0 = up, 50 = neutral, 100 = down	+0000	+0100
Units indicator	128	1		'T'		
Flap position	129	5	1 degree		-0090	+0090
Units indicator	134	1		'T'		
Carb temp	135	5	0.1 degree C		-9999	+9999
Units indicator	140	1		'C'		
Coolant pressure	141	5	0.01 PSI		+0000	+9999
Units indicator	146	1		'P'		
Coolant temperature	147	5	0.1 degree C		-9999	+9999
Units indicator	152	1		'C'		
Amps 2	153	5	0.1 A		-9999	+9999
Units indicator	158	1		'A'		
Aileron trim position	159	5	1% of travel	0 = left, 50 = neutral, 100=right	+0000	+0100
Units indicator	164	1		'T'		
Rudder trim position	165	5	1% of travel	0 = left, 50 = neutral, 100=right	+0000	+0100
Units indicator	170	1		'T'		
Fuel quantity 3	171	5	0.1 gallon		+0000	+9999
Units indicator	176	1		'G'		
Fuel quantity 4	177	5	0.1 gallon		+0000	+9999
Units indicator	182	1		'G'		
Unused	183	18				
Discrete input 1	201	1		1 = active, 0 = inactive		
Discrete input 2	202	1		1 = active, 0 = inactive		
Discrete input 3	203	1		1 = active, 0 = inactive		
Discrete input 4	204	1		1 = active, 0 = inactive		
Unused	205	12				
Checksum	217	2	ASCII hex	sum of all previous bytes		
CR/LF	219	2		0x0D/0x0A		
Total length	221					

H.6 GPS Data Message Formats

The GPS category contains two message formats. The GPS Position, Velocity, and Time (PVT) message format and the GPS Data message format are transmitted approximately once per second. Table H-4 and table H-5 explain the message formats.

Table H-4 GPS PVT Message Format

Field Name	Offset	Width	Units	Notes	Min	Max
Escape character	0	1		'@'		
UTC year	1	2	years	last two digits of UTC year	00	99
UTC month	3	2	months		01	12
UTC day	5	2	days		01	31
UTC hour	7	2	hours		0	23
UTC minute	9	2	minutes		0	59
UTC second	11	2	seconds		0	59
Latitude hemisphere	13	1		'N' for north or 'S' for south		
Latitude degrees	14	2	degrees		0	90
Latitude minutes	16	5	0.001 minutes	minutes x 1000	0	59999
Longitude hemisphere	21	1				
Longitude degrees	22	3	degrees	'E' for east or 'W' for west	0	180
Longitude minutes	25	5	0.001 minutes	minutes x 1000	0	59999
Position status	30	1		'g' = 2D GPS position		
				'G' = 3D GPS position		
				'd' = 2D differential GPS position		
				'D' = 3D differential GPS position		
				'S' = simulated position		
				'_' = invalid position		
Horizontal position error	31	3	meters		000	999
Altitude	34	6	meters	height above or below MSL	-99999	+99999
East/west velocity direction	40	1		'E' for east or 'W' for west		
East/west velocity magnitude	41	4	0.1 meters/sec		0000	9999
North/south velocity direction	45	1		'N' for north or 'S' for south		
North/south velocity magnitude	46	4	0.1 meters/sec		0000	9999
Vertical velocity direction	50	1		'U' for up or 'D' for down		

Table H-4 GPS PVT Message Format

Field Name	Offset	Width	Units	Notes	Min	Max
Vertical velocity magnitude	51	4	0.01 meters/sec		0000	9999
CR/LF	55	2		0x0D/0x0A		
Total length	57					

For more information on the GPS Data message, refer to http://www8.garmin.com/support/text_out.html.

Table H-5 GPS Data Message Format

Field Name	Offset	Width	Units	Notes	Min	Max
Escape character	0	1		'='		
Sentence ID	1	1		'7'		
Sentence version	2	1		'1'		
UTC hour	3	2	hours		00	23
UTC minute	5	2	minutes		00	59
UTC second	7	2	seconds		00	59
UTC second fraction	9	2	10 ms		00	99
Height AGL	11	3	100 ft		000	999
Ground Speed	14	4	0.1 knots		000	9999
Checksum	18	2	ASCII hex	Sum of all previous bytes		
CR/LF	20	2		0x0D/0x0A		
Total length	22					

H.7 EIS Complete Data Message Format

The EIS Complete Data Message outputs all Engine/Airframe Information System (EIS) data available to the AXIS flight display system. Because the amount of EIS data available to the AXIS flight display system depends on the aircraft's specific configuration, EIS messages use a flexible format that is expandable and self-describing. EIS messages are identified by sub-type and contain a variable number of fixed-width fields, each of which contains data for a specific EIS parameter. These messages support up to 256 EIS parameters, each of which is identified by a numeric parameter ID. Each item of EIS data is transmitted at a periodic rate, or when its value changes. The maximum length of any EIS message, including checksum and leading/trailing characters, will not exceed 256 bytes.

H.7.1 EIS Parameter Information

The Parameter Information message sub-type is transmitted periodically to allow receiving devices to decode the other EIS message sub-types. It contains a variable number of fixed-width parameter description records, each of which identifies the name and units of measurement associated with a single parameter ID. Transmitting details for all configured parameters may involve multiple parameter information messages.

Table H-6 EIS Parameter Information Message

Field Name	Offset	Width	Units	Notes
Escape character	0	1		'='
Sentence ID	1	1		'5'
Sentence version	2	1		Currently '1'
Sentence sub-ID	3	1		'i' (ASCII 0x69)
Parameter ID	12	2	ASCII hex	
Parameter Units	14	1		Refer to table H-7
Parameter Name	15	16		ASCII string
…variable number of records…				
Parameter ID		2	ASCII hex	
Parameter Units		1		Refer to table H-7
Parameter Name		16		ASCII string
Checksum	End-4	2	ASCII hex	8-bit sum of all previous bytes
CR/LF	End-2	2		0x0D/0x0A

NOTE

Parameter name strings will be null-terminated only if their length is less than the maximum of 16 characters.

Table H-7 EIS Parameter Information Message – Measurement Units

Character	Units
0 (zero)	None
C	Temperature, Degrees Celsius
P	Pressure, Pascals
L	Fluid volume, Liters
V	Electrical Potential, Volts
A	Electrical Current, Amperes
l (ASCII 0x6C)	Fluid Flow, Liters Per Second

H.7.2 EIS Discrete Parameter Data

The Discrete Parameter Data message sub-type contains a variable number fixed-width records, each of which indicates the current state of a single EIS discrete input parameter.

Table H-8 EIS Discrete Parameter Data Message

Field Name	Offset	Width	Units	Notes
Escape character	0	1		‘=’
Sentence ID	1	1		‘5’
Sentence version	2	1		Currently ‘1’
Sentence sub-ID	3	1		‘D’ (ASCII 0x44)
UTC hour	4	2	Hours	
UTC minute	6	2	Minutes	
UTC second	8	2	Seconds	
UTC second fraction	10	2	10 ms	
Parameter ID	12	2	ASCII hex	
Parameter Value	14	1		1 = active, 0 = inactive
…variable number of records…				
Parameter ID		2	ASCII hex	
Parameter Value		1		1 = active, 0 = inactive
Checksum	End-4	2	ASCII hex	8-bit sum of all previous bytes
CR/LF	End-2	2		0x0D/0x0A

H.7.3 EIS Numeric Parameter Data

The Numeric Parameter Data message sub-type contains a variable number fixed-width records, each of which indicates the current numeric value of a single EIS analog/digital parameter. For multi-engine aircraft, the message sub-ID field also identifies which engine's data the message contains.

Table H-9 EIS Numeric Parameter Data Message

Field Name	Offset	Width	Units	Notes
Escape character	0	1		'='
Sentence ID	1	1		'5'
Sentence version	2	1		Currently '1'
Sentence sub-ID	3	1		'1' = Engine 1 (ASCII 0x31) '2' = Engine 2 (ASCII 0x32)
UTC hour	4	2	Hours	
UTC minute	6	2	Minutes	
UTC second	8	2	Seconds	
UTC second fraction	10	2	10 ms	
Parameter ID	12	2	ASCII hex	
Parameter Value	14	11		Numeric value in scientific notation (±X.XXXXE±XX)
…variable number of records…				
Parameter ID		2	ASCII hex	
Parameter Value		11		Numeric value in scientific notation (±X.XXXXE±XX)
Checksum	End-4	2	ASCII hex	8-bit sum of all previous bytes
CR/LF	End-2	2		0x0D/0x0A

NOTE

If the value for a parameter is invalid, the associated numeric value field will be replaced with underscore characters ('_').

H.8 CNI Message Format

The CNI category contains one message format. The CNI message format is transmitted approximately once per second. Table H-10 explains the message CNI format.

Table H-10 CNI Message Format

Field Name	Offset	Width	Units	Notes	Min	Max
Escape character	0	1		'='		
Sentence ID	1	1		'C'		
Sentence version	2	1		'1'		
UTC hour	3	2	hours		00	23
UTC minute	5	2	minutes		00	59
UTC second	7	2	seconds		00	59
UTC second fraction	9	2	10 ms		00	99
COM1 active frequency	11	6	KHz		118000	136990
COM1 standby frequency	17	6	KHz		118000	136990
COM1 transceiver status	23	1		'T' = Transmit 'M' = Monitor 'R' = Receive '_' = no activity		
COM1 monitor enabled	24	1		0 = disabled 1 = enabled	0	1
COM1 fail	25	1		0 = no status failure 1 = status failure	0	1
COM1 squelch bypass	26	1		0 = not bypassed 1 = bypassed	0	1
COM1 volume	27	3			000	100
COM2 active frequency	30	6	KHz		118000	136990
COM2 standby frequency	36	6	KHz		118000	136990
COM2 transceiver status	42	1		'T' = Transmit 'M' = Monitor 'R' = Receive '_' = no activity		
COM2 monitor enabled	43	1		0 = disabled 1 = enabled	0	1
COM2 fail	44	1		0 = no status failure 1 = status failure	0	1
COM2 squelch bypass	45	1		0 = not bypassed 1 = bypassed	0	1
COM2 volume	46	3			000	100

Table H-10 CNI Message Format

Field Name	Offset	Width	Units	Notes	Min	Max
Navigation source	49	1		'I' = internal GPS 'G' = GPS1 'g' = GPS2 'V' = VLOC1 'v' = VLOC2		
NAV1 active frequency	50	6	KHz		108000	117975
NAV1 standby frequency	56	6	KHz		108000	117975
NAV1 ident	62	10	ASCII			
NAV1 fail	72	1		'0' = no status failure '1' = status failure	0	1
NAV1 volume	73	3			000	100
NAV2 active frequency	76	6	KHz		108000	117975
NAV2 standby frequency	82	6	KHz		108000	117975
NAV2 ident	88	10	ASCII			
NAV2 fail	98	1		'0' = no status failure '1' = status failure		
NAV2 volume	99	3			000	100
Audio Panel COM1 RX selected	102	1		1 = selected, 0 = not	0	1
Audio Panel COM2 RX selected	103	1		1 = selected, 0 = not	0	1
Audio Panel COM1 TX selected	104	1		1 = selected, 0 = not	0	1
Audio Panel COM2 TX selected	105	1		1 = selected, 0 = not	0	1
Audio Panel NAV1 RX selected	106	1		1 = selected, 0 = not	0	1
Audio Panel NAV2 RX selected	107	1		1 = selected, 0 = not	0	1
Audio Panel intercom isolate	108	1		'0' = None 'P' = Pilot 'C' = Crew		
Audio Panel marker beacon	109	1		'n' = None 'o' = outer 'm' = middle 'i' = inner		

Table H-10 CNI Message Format

Field Name	Offset	Width	Units	Notes	Min	Max
Audio Panel failure	110	1		‘0’ = no status failure ‘1’ = status failure		
Transponder mode	111	1		‘N’ = On ‘A’ = Alt ‘S’ = Standby ‘G’ = Gnd		
Transponder code	112	4			0000	9999
Transponder ident flag	116	1		1 = set, 0 = clear	0	1
Transponder reply flag	117	1		1 = set, 0 = clear	0	1
Transponder flight ID	118	8				
Transponder failure	126	1		‘0’ = no status failure ‘1’ = status failure	0	1
Checksum	127	2	ASCII hex	sum of all previous bytes		
CR/LF	129	2		0x0D/0x0A		
Total length	131					

APPENDIX J MAINTENANCE AND TROUBLESHOOTING

J.1 Inspections/Maintenance J-2
J.1.1 GSU 25 ..... J-2
J.1.2 GSU 73 ..... J-2
J.1.3 Transponder J-2
J.2 Return To Service Information J-3
J.2.1 GDU 116B/C/NC J-3
J.2.2 GSU 73 ..... J-4
J.2.3 GSU 25 ..... J-4
J.2.4 GMU 11/22/44/44b J-5
J.2.5 GEA 24 EIS Interface J-5
J.2.6 GSA 28 ..... J-6
J.2.7 GAD 29 ..... J-6
J.2.8 GMC 507 ..... J-6
J.2.9 Air Data Leak Test J-7
J.3 Troubleshooting J-8
J.3.1 General Troubleshooting J-8
J.3.2 CAN Network Troubleshooting J-10
J.3.3 GDU 116B/C/NC J-12
J.3.4 Air Data Troubleshooting J-15
J.3.5 ADAHRS Troubleshooting J-18
J.3.6 Engine Indication Troubleshooting J-19
J.3.7 Post-Installation Calibration Procedures J-20
J.3.8 Sending Troubleshooting Data to Garmin J-20
J.4 Routine Software Update Procedure J-21
J.4.1 Creating AXIS Software Loader Card J-21
J.4.2 Updating AXIS System Display Software J-22
J.4.3 Software Update Troubleshooting J-25
J.4.4 Force Loading LRU Software J-26
J.4.5 Software Update Summary J-27
J.4.6 Non-Primary Display Software Version J-28
J.4.7 Remote LRUs Supported for Software Updated by AXIS J-28
J.5 GPS 20A Lights J-29

J.1 Inspections/Maintenance

Periodic maintenance of most AXIS avionics LRUs is not required and is “on condition” only. The aircraft must be returned to service in a means acceptable to the cognizant aviation authority. Garmin recommends the AXIS LRUs be inspected for proper operation, secure attachment, integrity of connectors and wiring, cleanliness, leakage of hoses and tubes, and any evidence of damage as part of the required annual or periodic aircraft inspection. For more general inspection guidance, please refer to the applicable sections of CFR Part 43 Appendix D and Chapter 12 of AC 43.13-1B.

LRUs that require periodic maintenance are listed in the following subsections.

J.1.1 GSU 25

Per Part 43 Appendix E, paragraph (b)(2), Garmin recommends a test procedure equivalent to part 43 Appendix E, paragraph (b)(1) with two exceptions. The tests of sub-paragraph (iv) (Friction) and (vi) (Barometric Scale Error) are not applicable because the digital outputs of the GSU 25 are not susceptible to these types of errors.

This procedure is recommended when the static system is opened up (i.e. whenever the GSU 25 is removed or replaced). Garmin also recommends that a leak test be performed following any maintenance action in which the Pitot or AOA pneumatic lines are opened up (i.e. whenever the GSU 25 is removed or replaced).

The GSU 25 utilizes an Earth magnetic field model which is updated once every five years. The IGRF model is automatically updated with a Navigation database update. Otherwise maintenance of the GSU 25 is “on condition” only.

NOTE

If the GSU 25 is moved or replaced, the Post Installation Calibration Procedures (section 6) must be repeated.

J.1.2 GSU 73

Per Part 43 Appendix E, paragraph (b)(2), Garmin recommends a test procedure equivalent to part 43 Appendix E, paragraph (b)(1) with two exceptions. The tests of sub-paragraph (iv) (Friction) and (vi) (Barometric Scale Error) are not applicable because the digital outputs of the GSU 73 are not susceptible to these types of errors.

This procedure is recommended when the static system is opened up (i.e. whenever the GSU 73 is removed or replaced). Garmin also recommends that a leak test be performed following any maintenance action in which the Pitot pneumatic line is opened up (i.e. whenever the GSU 73 is removed or replaced).

The GSU 73 utilizes an earth magnetic field model which is updated once every five years. Otherwise, maintenance of the GSU 73 is “on condition” only.

J.1.3 Transponder

GNX 375, all GTX 335(D)(R)/345(D)(R) transponders and GTX 33/33(ES)/330/330(ES) transponders with software v8.00 or later are compliant with RTCA/DO-181D, which specifies that the selection of transponder ALT and GND modes may not be controlled by the pilot. To allow the transponder to be operated in ALT mode while on the ground for the purposes of performing periodic testing in accordance with the requirements of 14 CFR Part 91.413, a special transponder ground maintenance test mode is provided.

Refer to section 6.11 for a description of this procedure.

J.2 Return To Service Information

These return to service procedures are intended to verify the serviceability of the appliance only. These tests alone do not verify or otherwise validate the airworthiness of the installation.

J.2.1 GDU 116B/C/NC

J.2.1.1 Original GDU is Reinstalled

No software or configuration loading is required if the original GDU is reinstalled.

J.2.1.2 Original GDU(s) Installed in a Different Position

If a display is populated into a different harness position in the system, it will assume the display identity previously stored in the cross-side display's configuration module.

WARNING

Garmin strongly discourages the use of this method for troubleshooting purposes. Due to the various display variants of AXIS, system configuration may need to be re-entered and re-verified if this is done.

If two displays are swapped to move the position of the hardware, in the case that a NAV/COM display was unintentionally installed outside of the direct view of the pilot, the same criteria apply. Each display will assume the display ID saved in the configuration module of the connector.

If the two displays are different AXIS display variants (Base/COM or NAV/COM), verify configuration per section 5.3.1.1, for the variant of AXIS display that was installed. This will require selecting the correct display variant, in the associated GDU modify page.

J.2.1.3 New GDU(s) Installed

If a previously existing display in a system is removed and replaced with a new display, the new display will assume the display identity previously stored in the configuration module of the display connector. No additional configuration is necessary, however a software update may be warranted.

If the previous display was a base model, and is replaced by a COM or NAV/COM variant, verify configuration per section 5.3.1.1, for the variant of AXIS display that was installed. This will require selecting the correct display variant, in the associated GDU modify page.

J.2.1.4 New GDU (PFD) Configuration Module Installed

NOTE

If the configuration module for PFD1 is changed, a new System ID will be generated. Obtain the new system ID for PFD1 from the Devices Application. This must be used to update flyGarmin. If this step is not completed, the AXIS system will not accept future database updates.

If a new configuration module must be installed in any display connector, follow the procedure provided below.

1. Export configuration from PFD1, using the procedure described in section 5.9.3.1.
2. Complete installation of new configuration module.
3. Verify configuration in configuration mode, using PFD1.
4. Follow import procedure from section 5.9.3.2.

J.2.2 GSU 73

NOTE

A Pitot/static check, as outlined in 91.411 and Part 43 Appendix E, must be completed if the Pitot/static lines are broken.

J.2.2.1 Original GSU 73 Reinstalled

No software loading is required if the original GSU 73 is reinstalled in its original mounting location.

If configuration relating to the GSU 73 was changed while the unit was removed from the aircraft, the system must be powered on in configuration mode, with GSU 73 powered, to sync configuration.

Perform a Pitch/Roll calibration as described in section 6.3, upon re-installation of the unit.

J.2.2.2 New GSU 73 Installed

If a new GSU 73 is installed (new serial number), verify the correct software version on the Devices application in configuration mode. The correct GSU 73 software version will automatically be loaded from the GDU.

Perform a Pitch/Roll calibration as described in section 6.3, upon re-installation of the unit.

J.2.3 GSU 25

NOTE

A Pitot/static check, as outlined in 91.411 and Part 43 Appendix E, must be completed if the Pitot/static lines are broken.

CAUTION

During a Pitot/static test, if the AOA port is unused, connect it to the static port to avoid over pressuring (and causing damage to) the internal AOA sensor.

J.2.3.1 Original GSU 25 is Reinstalled

No software loading is required if the original GSU 25 is reinstalled in its original mounting location.

If configuration relating to GSU 25 was changed while the unit was removed from the aircraft, the system must be powered on in configuration mode, with the GSU 25 powered, to sync configuration.

Perform a Pitch/Roll calibration, as described in section 6.3, upon re-installation of the unit.

J.2.3.2 New GSU 25 is Installed

Verify the correct software version on the Devices application in configuration mode. The correct GSU 25 software version will automatically be loaded from the GDU.

Any time a new GSU 25 is installed, or an existing GSU 25 is moved to a different mounting location, the ADAHRS unit orientation (section 5.7.1), pitch/roll offset (section 6.3), and magnetometer calibration (section 6.7) procedures must be performed.

J.2.4 GMU 11/22/44/44b

NOTE

If GMU 22/44 is removed, the anti-rotation properties of the mounting screws must be restored. This may be done by replacing the screws with new Garmin P/N 211-60037-08. If original screws must be re-used, coat screw threads with Loctite 242 (blue) thread-locking compound, Garmin P/N 291-00023-02, or equivalent.

NOTE

A repeat of the Pitch/Roll Offset Compensation requires a repeat of the Magnetometer Calibration (section 6.7)

NOTE

The addition, removal, or modification of components that are ferrous, or otherwise magnetic, within 10.0 feet of the GMU magnetometer location after the Magnetometer Interference Test (section 6.6) or Magnetometer Calibration (section 6.7) were completed requires a repeat of both procedures.

NOTE

Electrical changes to the installation that affect components within 10.0 feet of the GMU magnetometer after the Magnetometer Calibration (section 6.7) and Magnetometer Interference Test (section 6.6) were completed will require a repeat of the magnetometer interference test. If new magnetic interference is detected, it must be resolved, then the Magnetometer Calibration must be repeated. Wiring or grounding changes associated with a device located in the vicinity of the GMU magnetometer is a good example of such a change.

J.2.4.1 GMU is Reinstalled

Any time a GMU is reinstalled, a new magnetometer calibration (section 6.7) is required.

J.2.4.2 New GMU is Installed

If a new GMU is installed (new serial number), a new magnetometer calibration (section 6.7) is required. Following a successful magnetometer calibration, the return to service procedure is complete.

J.2.5 GEA 24 EIS Interface

No additional configuration is required when a GEA 24 is reinstalled. If configuration relating to GEA 24 was changed while the unit was removed from the aircraft, the system must be powered on in configuration mode, with GEA 24 powered, to sync configuration.

If a new GEA 24 is installed, the correct GEA 24 software version will automatically be loaded from the GDU in configuration mode. Verify the correct software version on the Devices application in configuration mode.

GEA 24 (P/N 010-01042-00) and GEA 24B (P/N 010-02770-00) are fit/form/function the same, with the exception of fuel quantity inputs. If a GEA 24 in an existing installation is replaced with a GEA 24B, all fuel quantity inputs set as Resistive inputs must be re-calibrated. Fuel quantity inputs using the digital or voltage input do not need to be re-calibrated.

J.2.6 GSA 28

J.2.6.1 GSA 28 is removed

The system must be powered on in configuration mode with power provided to the GSA 28, to sync the software version with GSA 28.

If configuration relating to GSA 28 was changed while the unit was removed from the aircraft, the system must be powered on in configuration mode, with GSA 28 powered, to sync configuration.

NOTE

A removal adapter (P/N 011-03158-00) is provided (with each GSA 28 connector kit) that can be used when GSA 28 is removed. The adapter keeps that node on the CAN bus in the same state as when the servo was connected (either terminated or un-terminated). The adapter also allows trim signals to pass through when the servo is removed.

J.2.7 GAD 29

No additional configuration is required when a GAD 29 is reinstalled or replaced. The system must be powered in configuration mode with power provided to GAD 29, to sync software version with GAD 29.

If configuration relating to GAD 29 was changed while the unit was removed from the aircraft, the system must be powered on in configuration mode, with GAD 29 powered, to sync configuration.

J.2.8 GMC 507

No additional configuration is required when GMC 507 is reinstalled. The system must be powered in configuration mode, with power provided to GMC 507, to sync software version with GMC 507.

If configuration relating to the GMC 507 was changed while the unit was removed from the aircraft, the system must be powered on in configuration mode, with GMC 507 powered, to sync configuration.

If the GMC 507 is replaced, perform GMC 507 Pitch/Roll Calibration as described in section 6.4 upon installation.

J.2.9 Air Data Leak Test

Garmin recommends that a leak test be performed following any maintenance action in which the Pitot or AOA pneumatic lines are opened up (i.e. whenever GAP 26 is removed or replaced).

The AOA Pitot system leak test is not a regulatory requirement. If the system experiences inconsistent performance or an inability to calibrate the AOA System, leak testing may be performed to provide assurance that any leakage is within an acceptable range.

If a Pitot/static tester is used to perform this test, the recommended airspeed input applied to the probe pressure ports is 150 knots. The leak rate should be less than 5 knots/min with the probe removed from the aircraft. If the leak rate is less than 5 knots/min with the probe removed, attach the probe and perform the test with GAP 26 in line (make sure drain holes are fully sealed).

The guidance for Pitot system tests listed in AC 43.13-1B, Section 4 are not directly applicable to this AOA Pitot system. However, using it as a reference, it specifies the system shall be tested per the manufacturer's instructions but further states that if the manufacturer does not provide instructions, the default test is to apply 150 knots pressure to the system and measure the pressure loss over one minute. This loss is not to exceed 10 knots/min. While some GAP 26 probes will pass a test of this type, some may not. Garmin has determined that a leak rate of 250 knots/min or less is allowable and still provides proper functionality.

NOTE

Both pressure chambers on GAP 26 probe have drain holes that when open during normal operation would constitute a "designed-in" leak that is several times higher than 250 knots/min but does not add significant error.

CAUTION

When GSU 25 is used in conjunction with GAP 26 Pitot/AOA probe to perform Part 43 Appendix E altimeter tests, the probe adapter from the Pitot-static tester must completely cover the Pitot and AOA ports and drain holes on the GAP 26 to avoid over pressuring (and causing damage to) the internal AOA sensor of the GSU 25. If GAP 26 is installed but AOA is unused (i.e., the AOA port of GAP 26 is not connected to the AOA port of the GSU 25) then GAP 26 AOA port must be connected to the same pressure port as the Pitot port during Pitot-static testing.

NOTE

If the AOA is unused and connected to the static port (as described in the preceding Caution statement) it can remain connected to the static port for the Pitot-static test.

After the leak test is completed, make sure that all pressure ports and drain holes on GAP 26 are open and clear of debris.

J.3 Troubleshooting

NOTE

Any advisory or warning message indicated on the Info Page while on-ground should be investigated and resolved before flight.

NOTE

The information in this section is for troubleshooting use only and does not supersede any approved Maintenance or Installation Manual instructions.

J.3.1 General Troubleshooting

The Device application provides a large variety of diagnostic information for each LRU in the system. Review the status fields provides on the Devices Application, as described in section 5.3 prior to initiating any troubleshooting steps.

1. Review the airframe logbook to verify if any AXIS or other avionics or electrical maintenance had been performed recently that may have contributed to the failure.
2. Check for loose wire terminals on the circuit breaker connections on the power wire(s) causing intermittent power connections.
3. Check for intermittent circuit breakers.
4. Apply ground power to the aircraft.
5. Power on the AXIS flight display.
6. Record the system software level on the GDU display start up page.
7. After the system is initialized, note any red Xs on the displays, ALERT messages, and red Xs on the GDU.

If the failure cannot be verified, proceed to the following physical inspection:

1. Remove power from the AXIS flight display.
2. Remove interior panels to gain access to the ADAHRS.
3. Inspect the physical installation of the affected LRU.
4. Check the connectors are fully seated.
5. Check the jack screw connectors are tightened on both sides of the affected LRUs connector.
6. Check for a loose wire harness that is able to move around during flight. This condition may cause the wire to pull on or vibrate the connector, making intermittent connections.
7. Make sure the affected LRU is mounted securely. Use a screwdriver to check the tightness of the four mounting screws.
8. Look in the vicinity of the affected LRU for any heavy objects that may not be fastened tight to the structure and induce vibration in the ADAHRS.
9. Look for evidence of water or fluid contamination in the area around the affected LRU.
10. Unplug the affected LRU connector and check for bent pins.
11. Inspect the wire harness clamp on the rear of the connector to verify it is not too tight and smashing/shorting the wires. If the wire clamp is installed upside down, it has sharp edges that can cut into the wires.
12. Verify the presence of protective wire wrap between the wires and the clamp.

If the condition is not resolved by following the preceding instructions, contact Garmin Product Support for additional assistance. A Garmin Field Service Engineer may ask the technician to download the fault logs to a PC and email the logs back to Garmin to help determine if the condition is caused by an AXIS LRU or in the aircraft.

J.3.1.1 Status LED

LRUs using a CAN bus have an LED on the outer cases that indicates the current status of the LRU. The status indications are described in the table table J-1.

Table J-1 Status LED Indications

LED Indication	Description
No Light	No power.
Steady green	On, but not communicating using the CAN bus.
Flashing green	On and communicating using the CAN bus.
Red	Hardware fault.
Alternating red/green	CAN bus network error. Two similar devices are configured with the same unit ID.

J.3.2 CAN Network Troubleshooting

CAN is very simple, and a properly installed CAN bus is normally very reliable. If problems are suspected, the CAN bus wiring and arrangement of devices on the network should be examined. The following steps can help identify the issue.

1. Review the status LED of devices on the CAN bus such as the GSU25, GEA24, and GSA 28 servos. Refer to table J-1.
2. Make sure the CAN bus is daisy-chained between CAN devices around the system, and that CAN devices are not connected by a single point like a star or routed through a hub device. This can cause unwanted signal reflections and “orphan” some devices on the bus and prevent their communication.
3. Make sure the CAN bus is terminated in only two locations, and only at the two terminal ends of the linear daisy chain.
4. Make sure the overall length of the bus does not exceed 32 meters.
5. With power removed, remove a connector from one of the devices that is not located at either of the extreme ends of the CAN bus (do not use a terminating LRU).
   a. Using an ohm meter, verify the resistance between the CAN HI and CAN LO pins on the connector is 60 ohms. This verifies the CAN backbone is properly terminated at each end (two 120 Ω terminating resistors in parallel).
   b. A resistance of 120 Ω indicates that one of the two required CAN terminations is missing.
   c. A resistance of 40 Ω or less indicates that too many terminations are installed.
6. Verify the CAN HI and CAN LO signals are not swapped, shorted together, or open-circuited at any LRU connector.
7. Verify the CAN HI and CAN LO signals are not shorted to ground (this can happen when shielded wire is installed incorrectly).
8. Highlight each device on the configuration mode Devices Application and verify the value displayed for CAN Network Status is a steady 0%.
9. Power on one PFD1 display and one other CAN device at a time, and verify the connection quality for each device. Sometimes a device will communicate with PFD1 only when it is the only powered device on the CAN bus, if one or more of the above issues is present. Evaluating each CAN device in turn can help narrow down a problem.

It is very important for each device on the CAN bus to share a common power/signal ground. Ground potential differences between devices on the CAN bus can cause communication errors. Ground devices to a common ground bus, not to the airframe or to multiple grounding buses.

J.3.2.1 Intermittent CAN Troubleshooting

Open the Diagnostic Application in configuration mode, and select the CAN tab. Four types of errors are shown for each CAN LRU. These numbers are reported in real time. If a problem causing a CAN error is active, the numbers shown on this page will actively increase. If the problem suddenly ceases, the error counts will stop actively changing.

This direct insight into data bus activity can be used to identify the source of a problem with the CAN Bus, as it reveals when a problem starts and stops, so can be used to identify if changing something in the system starts or stops a problem.

Each fault field should ideally report zero, although this number may increase by one as LRUs are turned on and off. There is an exception for CAN BUS OFF, which always represents a significant problem if higher than zero.

When a CAN issue is suspected, use this page to monitor the activity of the CAN bus. Sometimes CAN errors will be found to be actively increasing upon opening this page. Other times, the error counts will not be changing.

The goal of this exercise is to identify an action which either triggers the counts to begin increasing or stops the count if it is already increasing. If such an action can be identified, it is very likely to be closely related to the source of the problem.

While viewing the CAN diagnostics page, perform each step listed below:

1. One by one, cycle power to each LRU.
   a. If error counts are steadily increasing, turn LRUs off one at a time.
   b. Monitor for error counts to stop incrementing.
   c. If error counts are not increasing, begin with all LRUs powered off, and turn them on one by one.
   d. Monitor error counts to detect when they begin increasing or stop increasing.
2. One by one, cycle other electronics in the aircraft: trim motors, Pitot heat, lights, COM transmit, transponder, etc.
   a. Monitor error counts to detect when they begin increasing or stop increasing.
3. One by one, manually manipulate wiring bundle near connectors.
   a. Monitor error counts to detect when they begin increasing or stop increasing.
4. One by one, disconnect wiring harness from each LRU.
   a. Monitor error counts to detect when they begin increasing or stop increasing.

J.3.3 GDU 116B/C/NC

J.3.3.1 USB-C Card Port

The USB-C drive must be formatted to ExFAT. If the drive is incorrectly formatted, the display is unable to communicate with the drive.

If the AXIS flight display USB-C port becomes damaged/inoperable, contact Garmin Aviation Support.

System diagnostic logs can be copied to the USB-C drive using the procedure described in section 5.9.1.

J.3.3.2 Unit Communication Error Messages

AXIS flight displays will not communicate with each other when their software versions are not the same. A software mismatch message will be reported on the Messages menu in Normal mode. Touch **Messages** to bring up the Messages menu. Update one or both displays to the same software version to clear the issue (refer to section 5.2.7). Unit communication error related messages and recommended actions are shown on table J-2.

Additionally, AXIS flight displays, and any HSDB connected external GPS navigator, must contain the same navigation database. If a navigation database mismatch exists, flight plan crossfill between the units will be inoperative.

Table J-2 Unit Communication Error Messages

Failure Message	Root Cause	Impact to System	Recommended Action
Flight Plan Sync Inactive: Navigation Database Mismatch	The navigation database loaded on an AXIS display does not match the region and effective version for any other AXIS flight display or HSDB navigator in the system.	Flight plans will not synchronize.	Update Navigation database on all AXIS displays and HSDB connected external navigators to the same region and issue.
Display Reversionary Mode : Communication Fault	The system has entered reversionary mode as a result of a HSDB failure.	Reduced ability of displays to communicate. Reversionary mode active.	Boot the system into configuration mode, and open the Devices Application. Use the diagnostic information provided here to troubleshoot the HSDB problem. The Diag Application also includes a HSDB tab which provides useful information.
<Display ID> Software Mismatch: Use Software Update Tool to Resolve	Software reported by the specified AXIS display does not match the version expected by the system.	Reduced ability of displays to communicate.	Boot the system into configuration mode, and open the Devices Application. If a software mismatch is detected, the user will be automatically prompted to initiate an update.
Display Redundancy Reduced: Communication Fault	AXIS Display units communicate via CAN and HSDB. This message represents a condition in which the CAN path has failed between displays.	Reduced capacity to share information across the display units. Verify CAN wiring and configuration.	User the Devices Application in configuration mode to troubleshoot the CAN bus.
Display Variant Mismatch	The selected variant for an AXIS GDU does not match the variant reported by the LRU.	Failed system functions, specific to variant mismatch (COM/NAV/ IFR GPS)	Use the Devices Application in configuration mode to ensure the assigned display variant matches the detected variant type. This is accomplished by selecting the tab for the problematic display, and touching **Modify**.

J.3.3.3 Change Display ID

CAUTION

Do not change the display identity of PFD1.

NOTE

Changing Display ID may result in the need to re-configure some portion of the system configuration.

Display ID should only ever be changed in response to an installation error, in which the incorrect Display ID was selected on initial boot up, or if the installer wishes to change a PFD to an MFD, or vice versa.

To change the display ID, boot the system into configuration mode.

1. On the display for which the display ID is to be changed, press the **MENU** hard key.
2. Select **Uncommon Actions**.
3. Touch **Change Display ID**.
4. Touch **Display ID**.
5. Select the desired display ID from the drop down menu.
6. Touch **Save**.

Changing display ID requires the installer to remove the previously existing device from the system Device list. This is accomplished using the Devices Application in configuration mode, through PFD1. If the Device was never added to this list, in the case of an installation error on initial boot, this step is not necessary.

Once the display ID has been changed, use the Devices application in configuration mode, through PFD1, to add the new display identity.

J.3.3.4 Clear System Configuration

This procedure will clear all system configuration data, and will require complete re-configuration of the system. Complete the procedure one display at a time.

1. Begin with all displays powered off.
2. Power up PFD1 into configuration mode.
3. Press the **MENU** key.
4. Select **Uncommon Actions**.
5. Select **Clear Configuration**.
6. Accept the on-screen prompts.
7. Allow the display to reset.
8. Remove power from PFD1.
9. Repeat this process for each display in the system, ensuring that no two displays are powered at the same time.

J.3.4 Air Data Troubleshooting

Under normal operating conditions, the ADAHRS provides the following air data information:

- Total Air Temperature is measured
- Outside Air Temperature (OAT)
- Indicated Airspeed (IAS)
- True Airspeed (TAS)
- Barometric Altitude
- Density Altitude
- Pressure Altitude
- Static Pressure
- Differential Pressure

NOTE

TAS information can only be displayed at speeds greater than 20 Knots (TAS is invalid when the aircraft is sitting still, or if no OAT probe is connected).

The displayed OAT will either be a number (when valid), or display an X. Valid OAT is required to calculate TAS, so if TAS is invalid because OAT is unavailable, both OAT and TAS will display an “X,” which indicates the problem is OAT (not air data) related.

A dashed-out value for TAS may simply mean the true airspeed being measured is too low to be of value (e.g. when the aircraft is on the ground). If the TAS indication still displays dashes at speeds greater than 20 knots and/or the OAT displays an “X”:

1. Check the GTP 59 OAT probe wiring and connection for faults.
2. Check configuration module wiring for damage, replace if any is found.
3. Replace the GTP 59 OAT probe.
4. If the problem persists, replace the ADAHRS with a known operational unit.

If the airspeed and/or altitude is failed and displays an “X”:

1. Inspect ADAHRS Pitot/static plumbing integrity.
2. Inspect Pitot/static ports and associated equipment.
3. If the problem persists replace the ADAHRS with a known operational unit.

J.3.4.1 ADAHRS Static Pressure Calibration

If a periodic altimeter test, performed with a properly calibrated static system test set, indicates the ADAHRS static pressure sensor needs to be re-calibrated, follow the procedure described below.

The ADAHRS tab in the CAL Application has a selection for ADAHRS Static Pressure Calibration. This procedure is used to perform an altimeter re-calibration. The altitude pressure sensor used in any AXIS ADAHRS unit has very low drift and does not typically require re-calibration.

CAUTION

To avoid damaging the ADAHRS pressure sensors, the Pitot, AOA (for GSU 25), and static ports must be connected to the test set.

CAUTION

Leaving the AOA port disconnected and exposed to ambient pressure during the static pressure re-calibration will damage the AOA sensor.

NOTE

This calibration is only used when an ADAHRS fails a periodic altimeter test and should only rarely, if ever, be used.

NOTE

For GSU 73 installations, after the AXIS flight display reports a static pressure calibration status of Success, power-cycle the GSU 73 and verify the calibration was retained before returning the aircraft to service. Do this by performing an altimeter test. In rare cases, the calibration results may fail to store to nonvolatile memory even though the display reports Success.

NOTE

For GSU 73 installations, transient pressure disturbances will restart the 30 second hold at the current calibration point, and disturbances shorter than 100 ms are not reported on the display. If the hold repeatedly restarts with no reason shown, check the test setup for small leaks or pressure instability, hold the test set pressure steady, and allow the step to complete before adjusting to the next pressure.

The static pressure calibration requires the use of a pressure control system (test set) with an altitude accuracy of at least ± 5 ft at sea level and ± 20 ft at 30,000 ft. It is necessary to re-calibrate to sea level (0 ft), 10,000 ft, 20,000 ft, and optionally to 30,000 ft.

It is acceptable to connect multiple pneumatic ports together. The AOA port should typically be connected to the static port so it is always exposed to the same pressure as the static port during the test.

To access this option, navigate to the CAL application, select the ADAHRS tab and press the MENU key. Toggle Air Data Calibrations on, to expose this option.

To initiate this procedure, select the ADAHRS tab in the CAL Application. Touch **Static Pressure Calibration**. Follow all on screen prompts to complete calibration.

During the calibration at each pressure, the pressure must be held constant for 30 seconds for the calibration step to be successful.

The calibration may be canceled at any point should the test setup require adjustment before repeating. The operator is allowed to finish the calibration at the end of the 20,000 ft calibration if the 30,000 ft calibration is not desired.

J.3.4.2 ADAHRS Zero Airspeed Calibration

If the airspeed indicator comes alive while stationary on the ground, follow the procedures described below.

CAUTION

Completing the Zero Airspeed Calibration procedure may impact the performance of AOA. After completing procedure, review AOA performance and repeat AOA calibration as described in section 6.13.2 as needed.

NOTE

Only perform this procedure in coordination with Aviation Product Support.

NOTE

Remove any covers from the Pitot tube and static ports before initiating this procedure.

NOTE

Ensure the aircraft is indoors and stationary, in a location where it is not affected by wind or direct breeze.

The ADAHRS tab in the CAL app has a selection for ADAHRS Zero Airspeed Calibration. This procedure is used to compensate for the noise present in the GSU 25 airspeed sensor while stationary. The airspeed pressure sensor used in any AXIS ADAHRS unit has very low drift and does not typically require re-calibration.

To access this option, navigate to the CAL application, select the ADAHRS tab and press the MENU key. Toggle Air Data Calibrations on, to expose this option.

To initiate this calibration, touch the Zero Airspeed Calibration option for the desired ADAHRS Unit. When the display reports the procedure has been successfully completed, select DONE.

J.3.5 ADAHRS Troubleshooting

J.3.5.1 Heading Failure

If an “X” (steady or intermittent) is displayed on the heading, check the following while the aircraft is on the ground:

1. When taxiing without reliable GPS information, heading performance is susceptible to the presence of magnetic anomalies (i.e., metal buildings, underground steel culverts, steel grates in the ramp). Localized sources of interference on the ground may consistently cause an “X” to be displayed on the heading in the same spot while taxiing, this is not caused by a failure of the GMU or its calibration.
2. When the aircraft is taxiing on the ground with a yaw rate of less than 1.5°/second (i.e., taxiing essentially in a straight line) GPS track information is used to update heading information. This logic is applied regardless of magnetic anomaly detection.
3. The GDU may display an “X” on the heading if the ADAHRS does not have GPS information, or if it senses a magnetic anomaly.
4. While a magnetic anomaly is detected and the aircraft is determined to be stationary, the value of the heading output is frozen. When either the aircraft is determined to be no longer stationary or the magnetic anomaly ceases, heading will be unfrozen and determined as usable. In this context, the aircraft is considered to be stationary when its yaw rate is less than 1.0°/second and all other angular rate and acceleration values are sufficiently small. (moving or shaking the wings or tail for example can cause an “X” to be displayed.)
5. Check to see if any new equipment has been installed on the aircraft, and reference table 4-27 for minimum distances for installed equipment from the GMU to prevent interference.

If magnetic heading is not present on the GDU, there may be a problem with communication between the ADAHRS and GMU magnetometer. Troubleshoot any possible wiring/connector issues before replacing either unit.

J.3.5.2 Attitude/Heading Failure Troubleshooting

Before troubleshooting an Attitude Failure, gather answers to the following questions. This information may be helpful to the installer/pilot, the AXIS Dealer, or to Garmin Aviation Product Support in troubleshooting the failure.

1. What specifically was the nature of the failure? Was it an X of only heading, only pitch/roll, or both?
2. If there was an X of pitch or roll information, did the PFD display the “ADAHRS Align: Keep Wings Level” message (which is indicative of an ADAHRS reset), or the “Attitude Fail” message (which is indicative of either ADAHRS invalidating its output, or a communication path failure)?
3. What exactly was the aircraft doing in the two minutes that preceded the failure (taxiing on the ground, flying straight-and-level flight, turning, climbing, etc.)? If the problem occurred on the ground, was it within 100 feet of a hangar using GPS repeaters?
4. How long did the failure last? Was it brief or sustained? Was it repetitive in nature? If it was repetitive, about how many times did it happen? Did it happen on more than one day?
5. Was the problem correlated with a specific maneuver or a specific geographic area?
6. Can the problem be repeated reliably?
7. Were any of the following message advisory alerts observed? Navigate to the INFO page and touch **MSG** to view them within an hour of the occurrence of the problem.
   a. ADAHRS not receiving airspeed.

   b. ADAHRS not receiving any GPS information.
   c. ADAHRS magnetic-field model out of date.
   d. ADAHRS extended operation in no-GPS mode.
8. Did the onset of the problem occur shortly after a software upload to one or more of the AXIS LRUs, or shortly after a repeat of the magnetometer calibration procedure?
9. Were there any GPS alert messages or loss of position lock?

The ADAHRS may not be able to provide valid heading/pitch/roll data for the following reasons:

1. If an "ADAHRS not Calibrated" message is displayed, either:
   a. A GSU 73 configuration module is inoperative.
   b. The external installation configuration parameters are not calibrated and the ADAHRS and/or Magnetometer calibration needs to be performed. If either of these is not calibrated, the ADAHRS heading, pitch, and roll may all be flagged as invalid. Calibrate the unit to the installation.
2. There is not sufficient or valid sensor information being provided to the ADAHRS for it to compute valid attitude information.

Garmin product support frequently makes use of information from .csv data log files to assist in troubleshooting ADAHRS issues. Refer to section 5.9.1.1 for information on collecting data log files.

J.3.6 Engine Indication Troubleshooting

To troubleshoot an engine indication failure, gather answers to the following questions. This information may be helpful to the installer/pilot, the AXIS Dealer, or to Garmin Aviation Product Support in troubleshooting the failure.

1. Does cycling power restore operation?
2. Did the operator give it sufficient time to start and initialize?
3. Did the problem begin after a software or configuration load?
4. Did the problem happen on the ground or while airborne?
5. Is only the EGT/CHT (i.e. thermocouple inputs) displaying an "X"? If so, the GSU 73 configuration module, configuration module wiring, thermocouple reference, or applicable thermocouple is defective. Check the wiring and replace the configuration module or applicable thermocouple.
6. Are there one or more temperatures that drop as the electrical load increases? If a temperature probe shorts (usually where the bayonet is crimped), a ground loop is created. This forces the reference (low side) to increase that causes the temperature reading to decrease.
7. Does the EGT temperature slowly drift up and eventually flag? This is an indication of an (electrical) open in the temperature probe or wiring.
8. Is the air data information on the PFD intermittently displaying an "X"? If the ADAHRS +5 VDC transducer power supply is shorted to ground, it will cause an intermittent air data X issue to occur.
9. If the AMP indication displays an "X," check the Alternator Shunt for correct resistance. Refer to the applicable sensor documentation.
10. If the Position Indication displays an "X," check the sensor and wiring.
11. For single-wire temperature inputs, ensure the LO input pin is tied to ground as close to the sensor as possible. Grounding the LO input pin farther away from the sensor may result in inaccurate or invalid readings.

J.3.7 Post-Installation Calibration Procedures

The calibration procedures in section 6 may be performed during troubleshooting.

The Magnetometer Interference Test may be used to find out if the location of the GMU is susceptible to magnetic interference.

The Engine Run-Up Vibration Test can be used to find out if the mounting of the ADAHRS is susceptible to aircraft vibration.

NOTE

Passing the Engine Run-Up Vibration Test does not remove the requirement to rigidly mount the ADAHRS to the aircraft's primary structure. The Engine Run-Up Vibration Test is intended to help identify mounting issues, but successful completion of the test does not validate the ADAHRS mounting and does not account for all possible vibration profiles that may occur during normal aircraft operation.

J.3.8 Sending Troubleshooting Data to Garmin

To assist with troubleshooting an issue, it may be helpful to send screenshots and/or .csv log files stored on USB-C drive to Garmin. This data can be especially useful to troubleshoot autopilot or AHRS related issues. This data can be sent to TeamX@garmin.com for troubleshooting assistance.

Refer to section 5.9.1.1 for information on the Flight Data Log Export function.

J.4 Routine Software Update Procedure

J.4.1 Creating AXIS Software Loader Card

1. Insert an empty USB-C drive into the USB-C port on the computer.
2. Go to Garmin's Experimental Avionics website.
3. Navigate to the AXIS flight display system page for experimental.
4. Click on **Software**.
5. Click **Download** for the desired AXIS flight display system software.
6. Navigate to the **Downloads** folder on your computer.
7. Right click to extract the downloaded zip file containing the system software to your USB-C drive.
8. Ensure that the .gca and .sff files are in the root of the USB-C drive.
9. Eject and remove USB-C drive.

The software is now ready to be loaded to the AXIS flight display and supported auxiliary units.

J.4.2 Updating AXIS System Display Software

NOTE

Remote LRU software updates will only occur while in configuration mode.

NOTE

Perform software updates on the ground only, and remain on the ground while a software update is in progress.

Software updates for the AXIS system are accomplished by transferring a complete software package (AXIS version) to PFD1 via USB-C. The AXIS version contains numerous individual software updates for AXIS displays and remote LRUs in the AXIS system. Once the AXIS version is transferred to PFD1, PFD1 will first propagate the AXIS version software package to rest of the displays in the system. Once all displays have received update, the system will reset, and boot back into configuration mode.

1. Connect external power to the aircraft to energize the aircraft and avionics electrical buses.

CAUTION

Do not rely on the aircraft battery to load software. Do not use a battery charger as an external power source. Power loss during a software update may cause an LRU to become corrupted and unresponsive requiring replacement.

2. Insert USB-C with up-to-date software package loaded to the card, into PFD1.
3. Power on all AXIS displays in configuration mode. When the system has processed the software package loaded to the USB-C drive, a popup displays.
4. Touch **OK** to open the Software Update page.

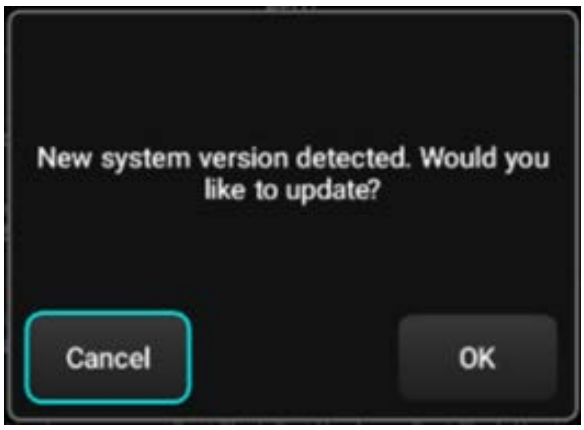

Figure J-1 Software Version Pop-up Window

The Software Update Page is broken into two sections. The top section relates to the AXIS Version, as loaded from the USB-C drive. The Update Queue below it specifically provides information relating to the software the AXIS display provides to the remote system LRUs via CAN, HSDB, or other data paths, which is used later in the process.

Figure J-2 System Software Update Key

5. Touch **Update**, next to the system software version, and accept the resulting confirmation step. This loads the AXIS version from the USB-C drive to each AXIS display in the system. Once the progress wheel shown below reaches 100%, all displays in the system will reset and reboot into configuration mode.

Figure J-3 Updating System Software Progress

CAUTION

Ensure power is not removed while any update is being performed.

After the system fully reboots in configuration mode, remove the USB-C drive. The Software Update page automatically displays. The system will then interrogate each remote LRU to determine whether an update is necessary. This may take a few moments. Remote LRUs that are determined to need an update will be added to the Update Queue. The current version and the new version to be loaded are shown next to each LRU. Remote LRUs are updated one by one and will display a progress indicator when they begin updating.

NOTE

This process may take up to ten minutes for all LRUs connected via high-speed CAN bus or HSDB. The GDL 5XR is connected via RS-232 and may take up to 15 minutes to complete.

NOTE

It is important to ensure all system LRUs are powered during this process, to ensure that any LRU that requires a software update is identified and queued for an update.

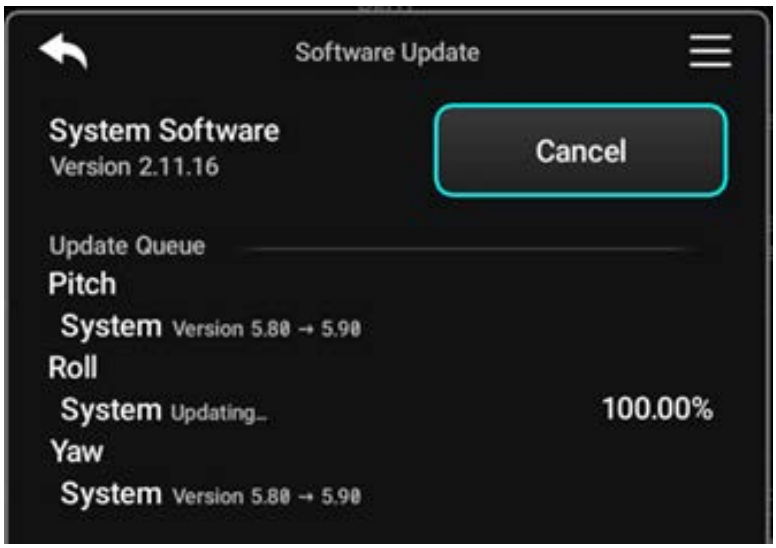

Figure J-4 System Update Status

Once all remote LRUs have been updated, 100% will display next to each LRU. The key in the top right corner of the software update page will change to “Summary.”

Figure J-5 Summary Key

6. Use the Summary page (section J.4.5) to ensure the current and expected software version for each LRU in the system are the same value.

7. If an LRU fails to update, FAILED will be displayed in amber. Use the Force Load function described in section J.4.4 and troubleshooting information in section J.4.3 to resolve a failed LRU software update.

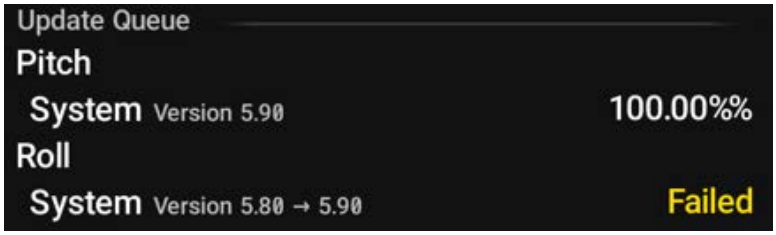

Figure J-6 Failure Screen

NOTE

In the case that an LRU (remote or AXIS display) was not powered during the update process, the installer may always go back to configuration mode, and power the LRU. The system will automatically recognize the software version discrepancy, add the LRU to the update queue, and begin updating it.

J.4.3 Software Update Troubleshooting

Software updates to remote LRUs are bandwidth intensive on the data bus. Any imperfections in the data bus architecture or wiring that do not affect LRU communication during normal operation can still cause issues during the software update process.

If an LRU is failing to update, it can be helpful to “unload” the CAN bus. Remove power from all LRUs that have successfully updated, leaving only PFD1 and the LRU of interest powered and communicating. This can allow the software update to proceed. If this is successful, investigate bus architecture and wiring, to ensure no unacceptable wiring exists, per section 3.2.2.

The AXIS display will attempt to send software to remote LRUs more than once if an initial attempt fails to complete, but will eventually time out. This process automatically occurs on each successive power cycle, while the software mismatch exists. To force the LRU to begin updating without needing to reset the display, use the procedure described in section J.4.4.

J.4.4 Force Loading LRU Software

While on the software update page, press **MENU** and touch **Force Load Software**.

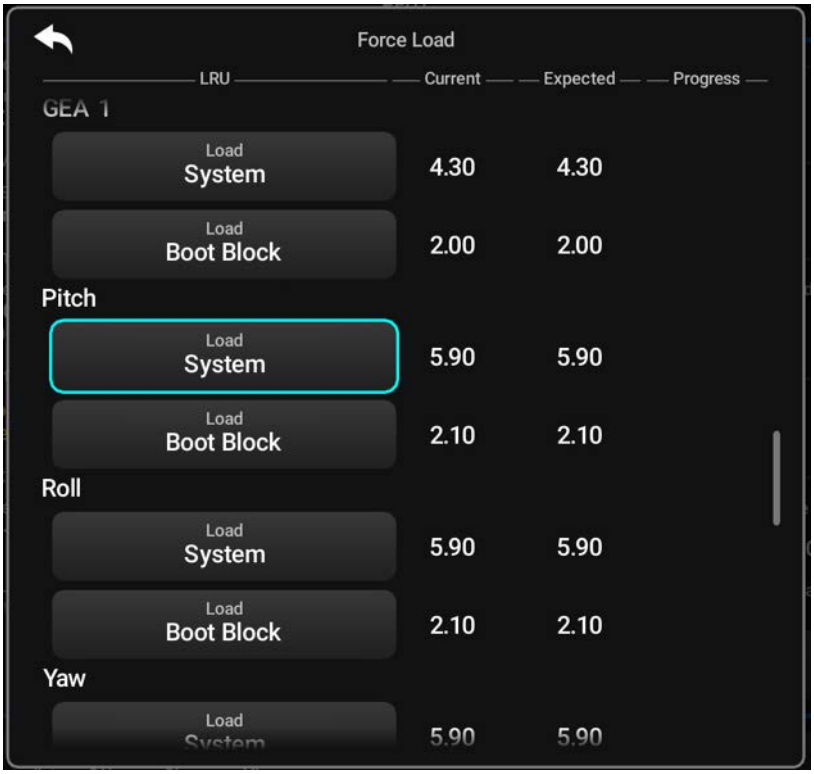

Figure J-7 Force Load Software Page

Any software mismatches will be shown in amber on this page. Touch each software version to re-initiate a software load to the LRU for the specified software version.

This can also be used in cases where a software version needs to be reset to the LRU, even if a mismatch does not occur. This uncommon troubleshooting step is used in the case of a software file corruption.

NOTE

Some versions of software specific to the AXIS display are unable to be force loaded, and are shown as grayed out keys.

J.4.5 Software Update Summary

At any time, touch the Software Update icon in the top right corner of the display to open the software update page. Unless a USB-C drive is recognized by the display that contains an update to the AXIS version, or a software update is in progress, the key in the top-right corner will display **Summary**. Touch **Summary** to view the reported current software version for each LRU and the software version expected by the AXIS system for each LRU.

NOTE

*System Summary can also be viewed at any time by pressing the **MENU** hard key while the Software update page is open.*

The current versions are the software versions reported by each LRU. If an LRU is not powered or communicating with the system, no current version will be available.

The expected versions are the software versions expected by the AXIS display for each LRU. If the AXIS display expects a version higher than the current version reported by the LRU, the system will automatically initiate an update attempt for that LRU.

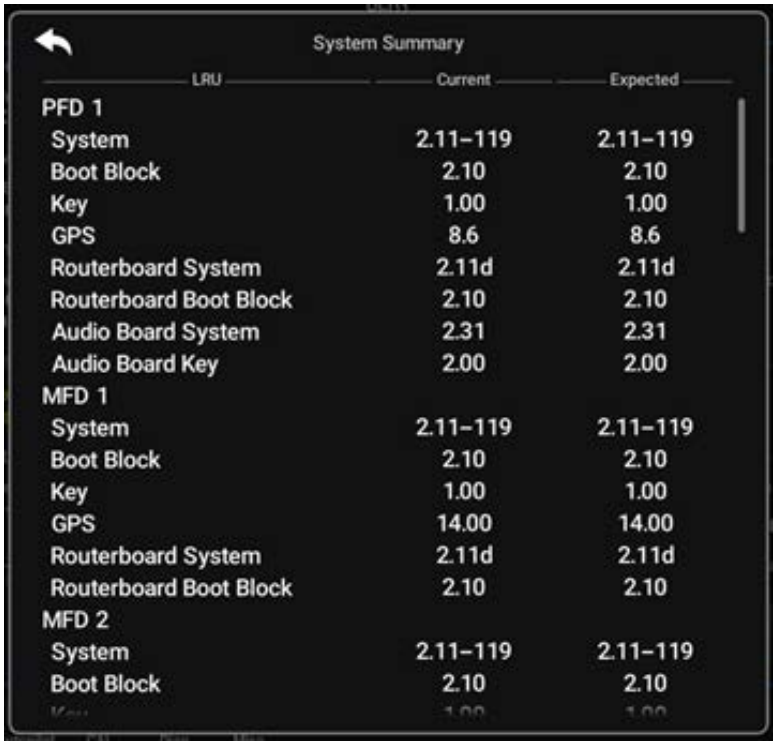

Figure J-8 System Summary Page

J.4.6 Non-Primary Display Software Version

Software updates can only be commanded from PFD1. However, touch the software update icon (arrow) in the top right corner of any other display in the system for a direct report of the AXIS version saved on the unit.

Figure J-9 System Software Version Screen

J.4.7 Remote LRUs Supported for Software Updated by AXIS

Software for the following LRUs must be loaded through the AXIS flight display and cannot be loaded directly to the LRU, even if the interface is present:

- G5
- GAD 13
- GAD 27
- GAD 29( )
- GEA 24(B)
- GDL 50R/52R
- GEA 110
- GHA 15
- GI 275
- GI 260
- GTR 205x(R)
- GMA 245(R)(M)
- GMC 507
- GMU 11
- GMU 22/44(B)
- GNC 215
- GSA 28
- GSU 25( )
- GSU 75
- GTR 20/200B
- GPS 20A
- GSU 73

J.5 GPS 20A Lights

The GPS 20A has two LEDs on the outer case that indicate its current unit and GPS status.

The unit status LED is in the middle of the outer case between the coax and 9-pin connectors.

The GPS status LED is on the edge of the outer case, to the left of the coax connector. Table J-3 lists the GPS status indications:

Table J-3 GPS Status LED Indications

LED Indication	Descriptions
Red	GPS hardware failure.
No light	GPS acquiring, low signal to noise ratio, or antenna not connected.
Slow flashing green	GPS acquiring, good signal to noise ratio.
Fast flashing green	GPS fix acquired.
Steady green	GPS WAAS fix required.
Alternating red/green	CAN bus network error, two similar devices are configured with the same unit ID.

GARMIN®