EOS-LUX Command Center
Installation Guide

Please read the following pages before attempting installation to ensure complete understanding of the LUMISHORE EOS-LUX Command Center



PARTS INCLUDED



1 x DMX TERMINATOR



1 x FIELD INSTALL RJ45 IP67 COVER KIT (39-0235)

EOS-LUX Command Center Installation Instructions

Before you start…

- Always ensure that the vessel's power source and battery are disconnected or isolated prior to installation.
- A qualified professional should carry out both the electrical and mechanical installation.
- The EOS-LUX lighting system should be fully installed before connecting the EOS-LUX Command Center.
- The EOS-LUX Command Center must be mounted in a dry location and on a flat (not curved) surface away from any sources of heat or vibration
- The EOS-LUX Command Center works with the EOS-LUX Display and or compatible Multi-function Displays (MFD). - check the compatibility of your MFD prior to installing the EOS-LUX Command Center. The MFD may require a software update.
- The EOS-LUX Command center has an accessible SD card slot for future software upgrades. When mounting, future access to this SD card slot should be taken into consideration.

Connection Options…

The EOX-LUX Command Center is a cross platform device. Via ethernet, it can connect to a single or multiple MFD network, connect to a Lumishore EOS-LUX display or be controlled by a smart Phone/tablet (via Wi-Fi).

Compatible MFD's include the following…

MFD COMPATABILITY	- Garmin (OneHelm Enabled) - Raymarine - Axiom (Lighthouse Partner App) - Navico - Simrad (NSO EVO3 and EVO2, NSS EVO3 and Go**), B&G (Zeus3 Glass Helm, Zeus3 and Vulcan) - Furuno Navnet TZ Touch 3 Series

The EOS-LUX Display can be used if there are no MFD's on the vessel or if additional access points are required around the vessel. For full details of the EOS-LUX Display see EOS-LUX Display installation instructions.

Via an on-board Wi-Fi network (either through the MFD Wi-Fi or through the **EOS-LUX** Command Center on-board Wi-Fi) the **EOS-LUX** app can be controlled from a smart device. Full instructions for this are included in the **EOS-LUX** Command Center user manual.

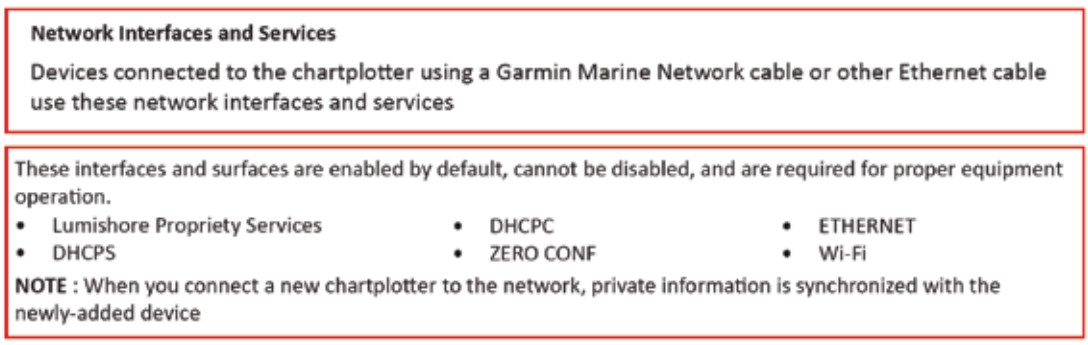

Single MFD Connection



EOS-LUX Display Connection



Multiple MFD/EOS-LUX Display Device connection

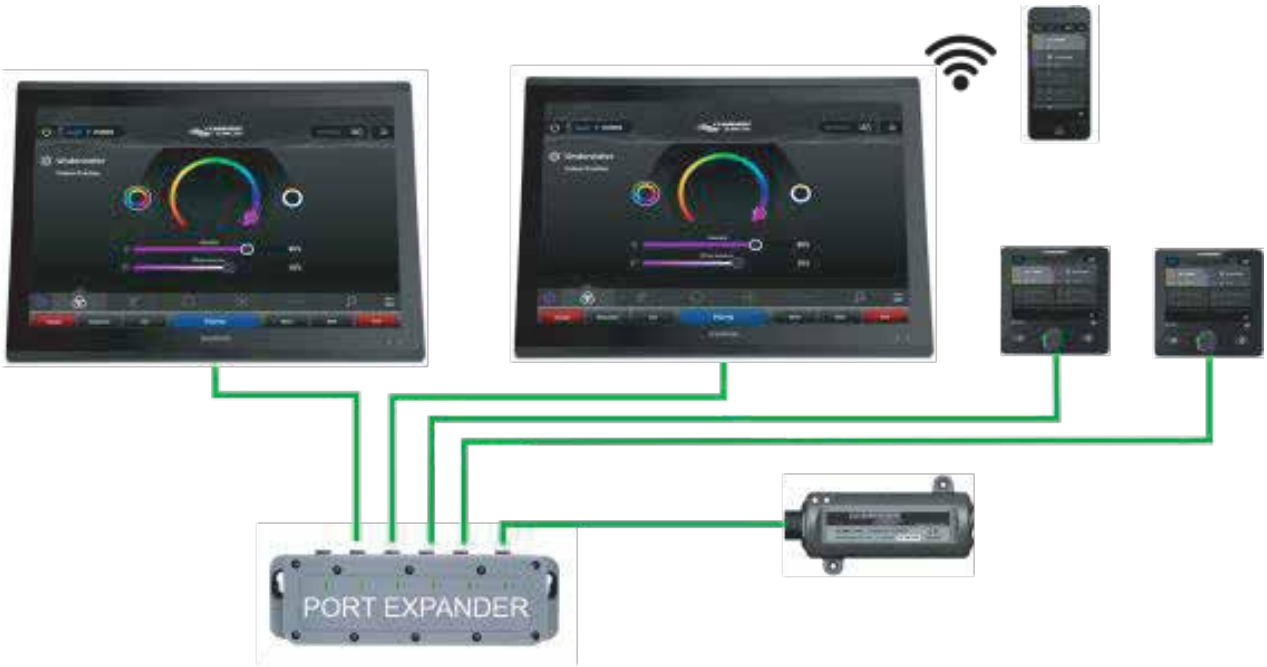

Note: use a MFD manufacture specific Network expansion port – consult with your MFD installation guide or contact a dealer for further advice.

Connecting the EOS-LUX Command Center to the EOS-LUX Display or MFD.

For direct connection to the Lumishore EOS-LUX Display any standard ethernet network cable can be used. Connection to the various brands of MFD's are brand specific. The following diagrams show the components required to connect the EOS-LUX Command Center to each brand.

The length of network cable depends on where the EOS-LUX command centre has been installed relative to the Display or MFD. Each MFD manufacturer offers different lengths of network cable, check your installation length before ordering.

Lumishore supplies a Field install RJ45 IP67 cover to make your connections to the EOS-LUX Command Center waterproof. The cover should be used on all installations. Note: The internal support may or may not be required depending on the type of Ethernet connector molding.

Field install IP67 RJ45 Cover Assembly

PLEASE REFER TO RJ45 IP67 ASSEMBLY INSTRUCTIONS SUPPLIED WITH RJ45 COVER KIT (39-0235)

EOS-LUX Display – Use standard Ethernet Cat5e Cable



Garmin MFD Install - Use Garmin Conversion Cable PN: 60-0372 and Garmin Network Cable.

(Note: the Garmin Conversion cable M**ust** be installed – only use **Garmin network cables**)

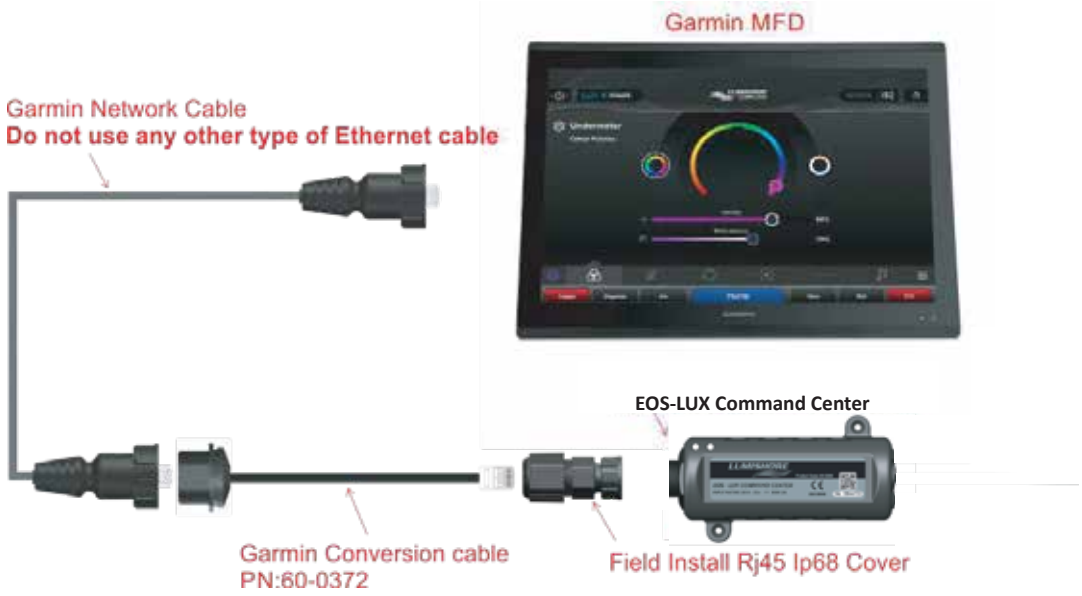

Raymarine MFD Install - Use Raynet to RJ45 Cable, Raymarine PN: A80151

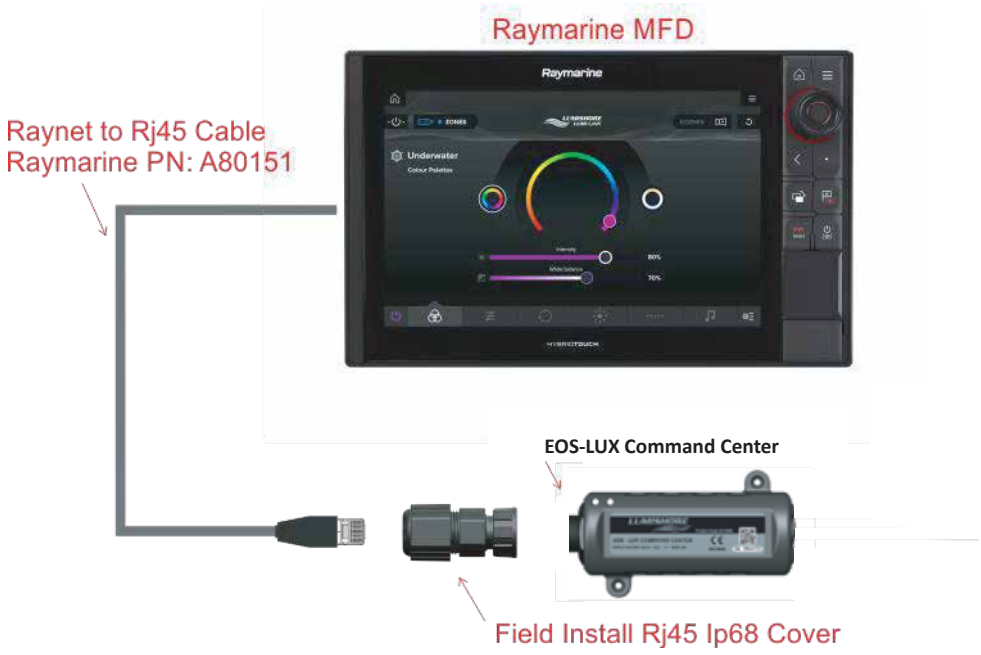

Simrad & B&G MFD Install - Use Navico Conversion cable PN: 60-0373

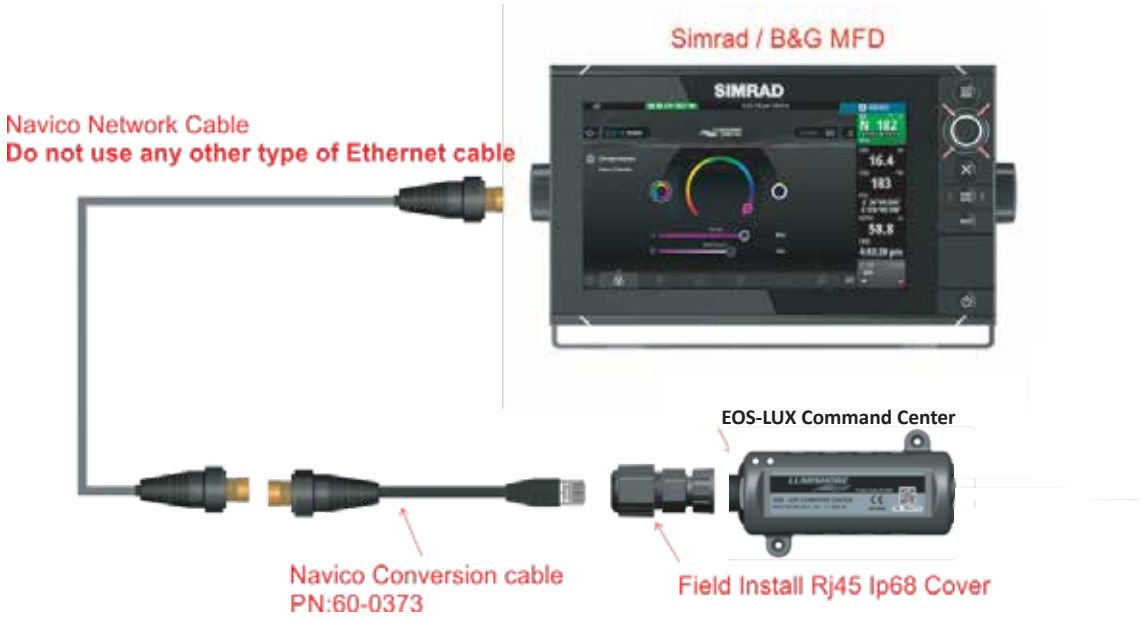

Furuno MFD Install – Use Standard Ethernet Cat5e cable

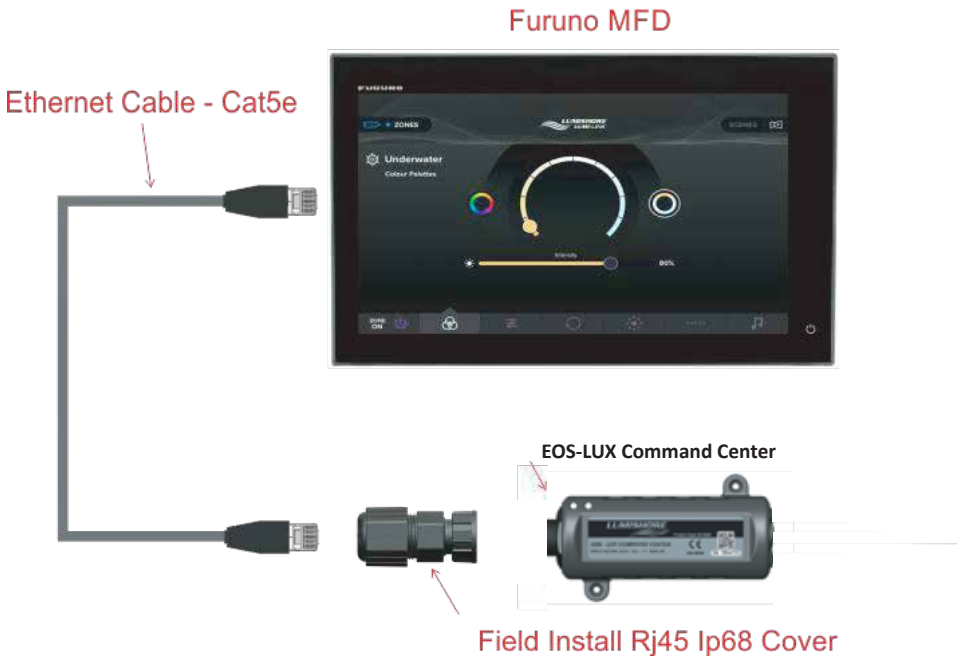

EOS-LUX Command Center Connections

The Command Center uses a proprietary form of DMX to communicate between the lights and controller. Whilst Lumishore EOS lights can be controlled by any DMX controller (with limited feature set), the EOS-LUX Command Center can only be used to control Lumishore products.

The EOS-LUX Command Center is plugged into the first Driver, Hub or Light Module in the series. The installation is terminated using a DMX Terminator plugged into the last light, driver, hub or module in the series. (see example diagrams on the following pages)

- The EOS-LUX Command Center is for 12/24volt DC operation (10-31volt input). Under no circumstances should the Controller be connected directly to Mains AC voltage.

- Always use a suitable fuse or circuit breaker to protect the EOS-LUX Command Center and each element of the system.

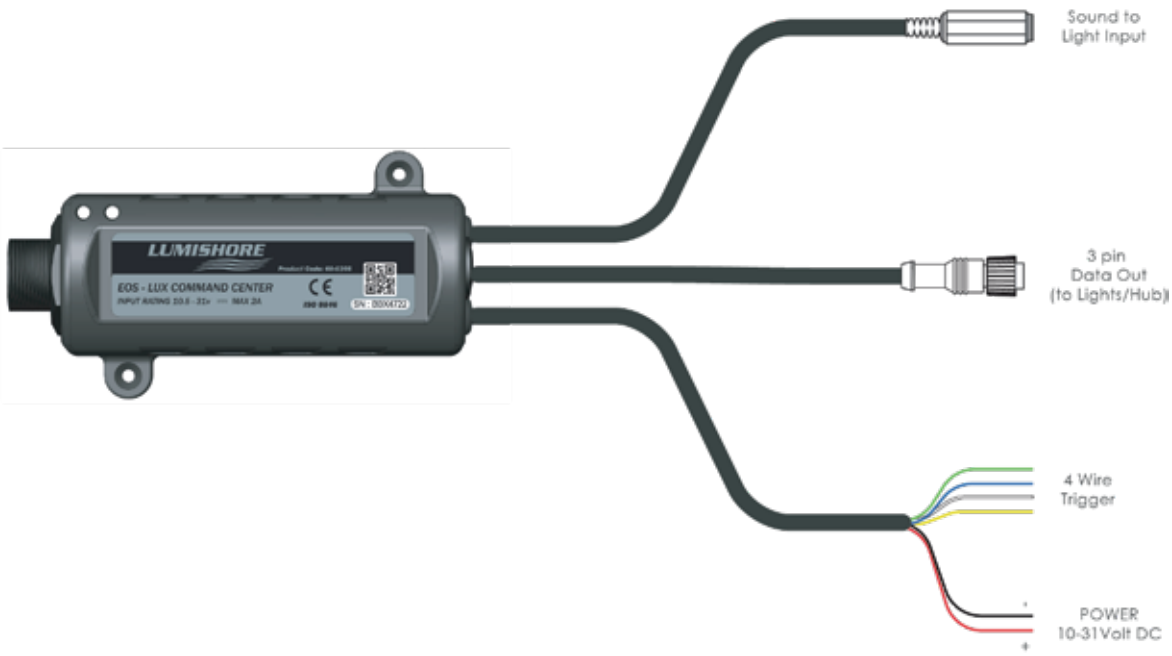

3 Pin M12 EOS-LUX Data out connector:

1. Using EOS-LUX DMX cable extensions connect one end to the 3 pin connector on the back of the EOS-LUX Command Center. Connect the other end to the first light, driver, hub or module in the series.

2. Use a EOS-LUX DMX extension cable to link the next Driver or lighting module. Do not cut or extend the DMX link cable.

Pre-molded EOS-LUX DMX cables are available in 1 meter, 5 meter and 15 meter lengths as required. Multiple cables can be combined if a further distance is required.

3. Plug the supplied DMX terminator into the DMX output connector of the last light, driver or module in the chain.

DMX Extension cables (NOTE: Do Not Cut and Splice DMX cables)

Length	Part Number
1m	60-0403
5m	60-0404
15m	60-0405

Sound to Light Connection:

A 3.5mm Jack Socket is included. Use a “Jack to Jack” cable or “Jack to Phono” cable as required to plug the “Line out” from a stereo or iPad/iPhone.

For best results use a stereo output that has constant output irrespective of volume, i.e. when using an iPad or iPhone use the line out rather than the headphone socket. That way the sensitivity of the controller will not need continuous adjustment when changing volume.

3rd Party Trigger Input (Optional):

Contact Lumishore to discuss optional 3rd party triggers for Scenes and Zones.

EOS Underwater Light installation Example diagrams: -

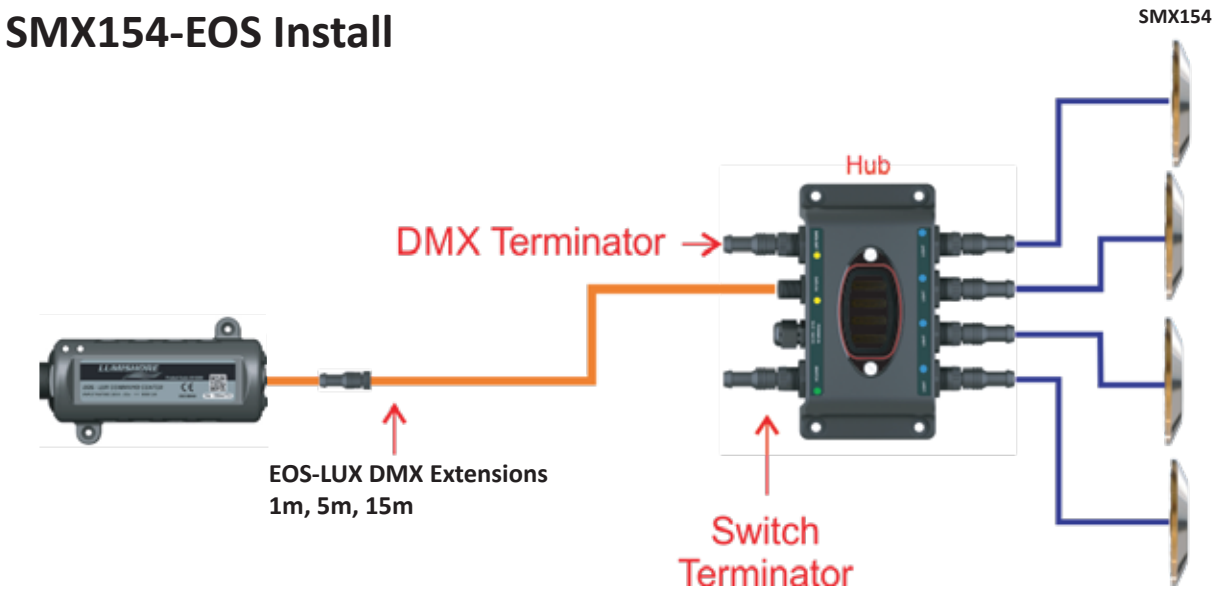

TIX404 EOS Install

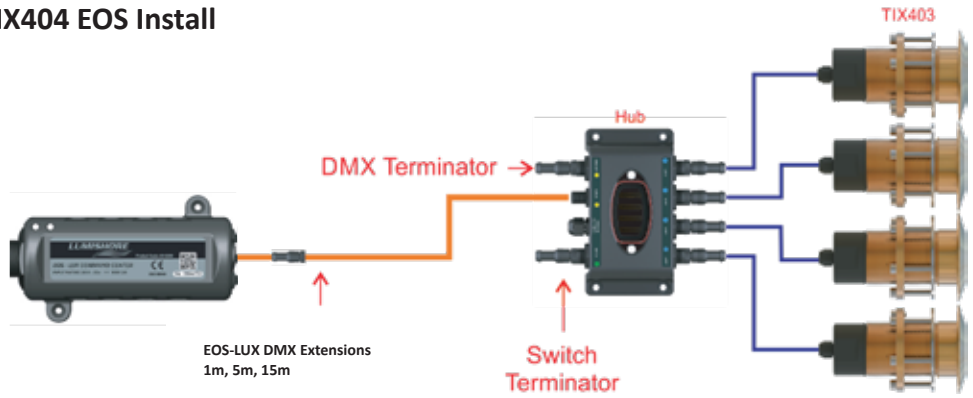

TIX804 / 1604 EOS Install

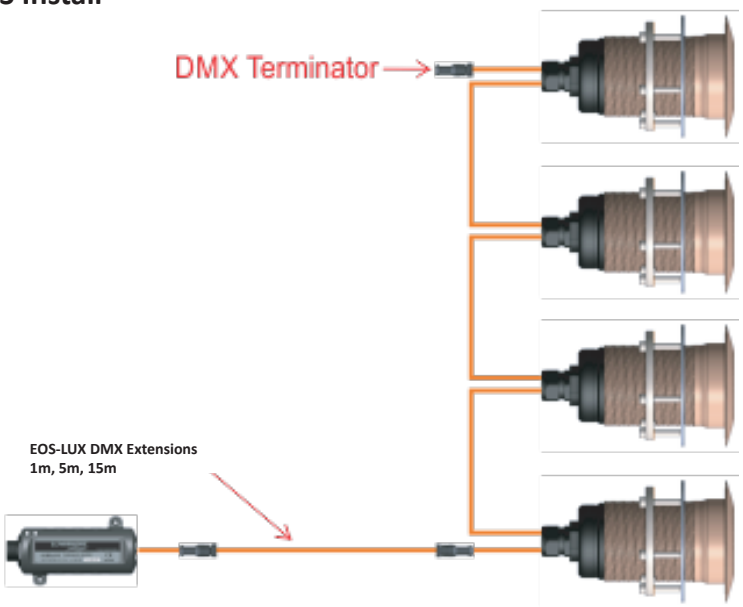

THX404 / 804 / 1604 EOS Install

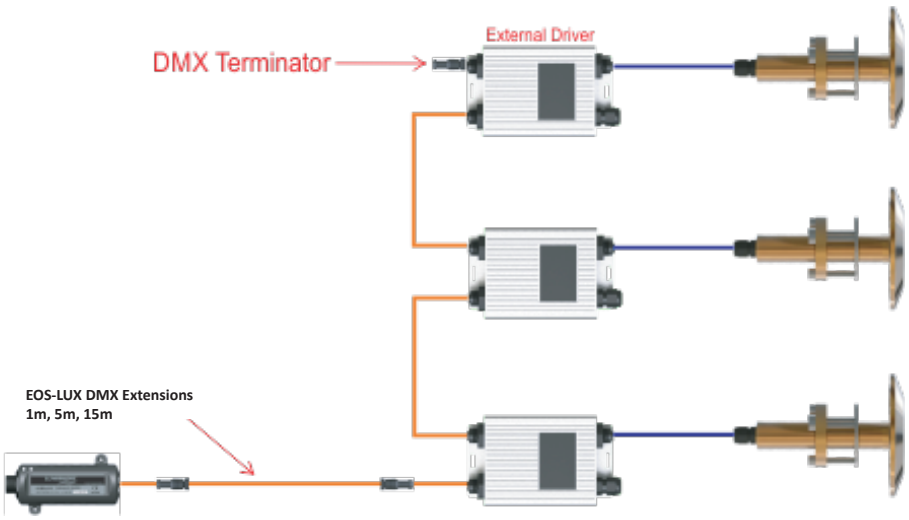

System Diagram for EOS-LUX System including both EOS (underwater lights) and LUX (above water Lights)…

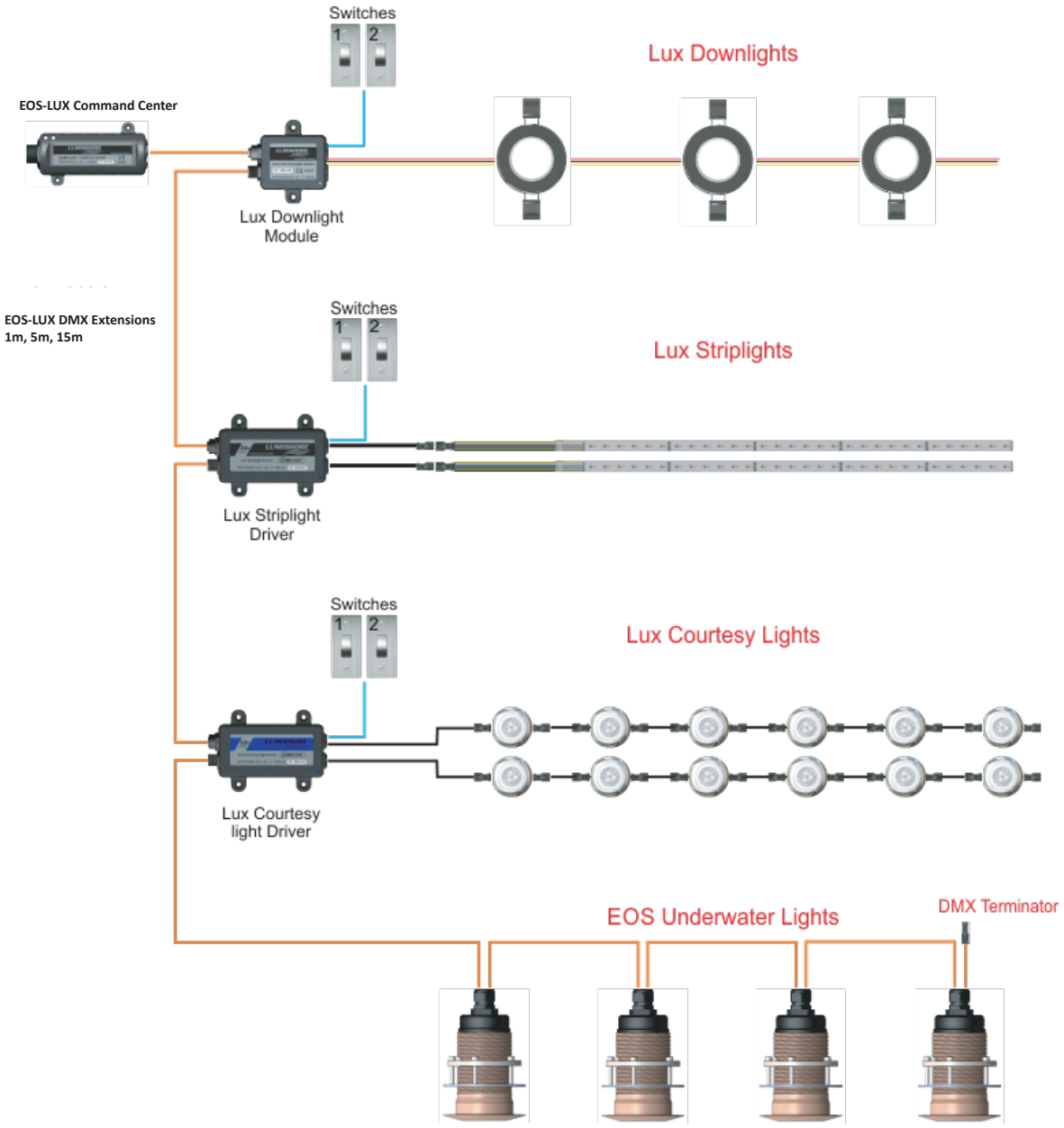

Independent Switches (1,2)

Each LUX module can be controlled from independent momentary switches mounted in the room or dash board. When pressed, the switch removes control from the EOS-LUX command centre and offers independent On/off control, dimming or pre-set colour selection. To let the EOS-LUX command center regain control the associate zone should be powered off and on again at the MFD, smart device or EOS-LUX display.

Mom Switch 1: ON/Off, Press and hold to Dim.

Mom Switch 2 (optional): Can be wired to control pre-set colours; Cold White, Mid White, Warm White, Red, Blue, Green, Cyan, Magenta or alternatively wired to control Cold White, Mid White and Warm White only.

EOS-LUX Command Center - Status Leds



LED Status	Power LED	Data LED
Solid ON	Healthy	Healthy - Data Being Received
OFF	No Power	No Power
Flashing	N/A	Healthy - Ready For Data

If power to the EOS-LUX Command Center is lost temporarily then the system may not fully function until you exit to the Home screen on the MFD, and then re-select the EOS-LUX Screen.

If there are multiple MFDs in use, and one of the MFDs is used to access a set-up mode (e.g. Light Set-Up), then the other MFDs will be locked out and will display a message. If this message is seen then exit to the home screen. Once the set-up is completed the system can be used as normal.

Warranty -

LUMISHORE Ltd warrants its lighting systems and associated lights and accessories to be free from defects in workmanship for a period of three years, starting from the date of original purchase. Should your lighting system have a problem during this period, please contact your dealer, boat manufacturer or broker as soon as you become aware of the defect.

Misuse, abuse, improper installation, neglect, improper shipping, damage caused by disasters (e.g. fire, flood, storm and lightning), installation by unqualified personnel, unauthorized repair or modification or non-approved installations will void this warranty. For the avoidance of confusion and doubt, non compliance with all installation guidelines, maintenance and operating instructions in this document constitute non conformance with warranty terms.

Full warranty details including exclusions are available at -

www.lumishore.com.