JL AUDIO®

FATHOM® ICS

IN-CEILING SUBWOOFER SYSTEMS

ICS-SYS-108
ICS-SYS-208

Enclosure Installation Manual

IMPORTANT SAFETY INSTRUCTIONS

1) **Read the Instructions** — All safety and operating instructions should be read before the subwoofer is operated.

2) **Retain the Instructions** — These instructions should be retained for future reference.

3) **Heed Warnings** — All warnings in these instructions should be followed.

4) **Water and Moisture** — The enclosure and subwoofer should NOT be used near water – for example, near a bathtub, washbowl, sink, laundry tub, in a wet basement, near a swimming pool, etc.

5) **Heat and Flames** — The enclosure and subwoofer should be situated away from heat sources such as radiators, heat registers, stoves, fireplaces, or other devices which produce heat. Do not place candles nearby.

6) **Object or Liquid Entry** — Care should be taken so that objects do not fall into and liquids are not spilled onto the enclosure, subwoofer or grille. Do not expose to dripping or splashin+g from liquids. Do not place objects filled with liquids nearby. For example: flower vases, beverages, liquid-fueled lamps, etc.

7) **Damage Requiring Service** — The subwoofer should be serviced by qualified service personnel when:
   a. the subwoofer does not appear to operate normally or exhibits a marked change in performance
   b. the subwoofer driver's cone and/or suspension has been physically damaged

WARNING

THIS SUBWOOFER IS CAPABLE OF PRODUCING VERY HIGH SOUND PRESSURE LEVELS. PLEASE EXERCISE RESTRAINT IN ITS OPERATION TO PROTECT YOUR HEARING FROM PERMANENT DAMAGE.

TABLE OF CONTENTS

Important Safety Instructions: 3
Introduction and Overview: 4
System Components: 5-7
Tools for Installation / Prepping the Work Area: 8
What Is In The Box?: 9
Enclosure Mounting Hardware: 10
Enclosure Installation Procedure: 11-31
Grille Installation Procedure: 32-33
Specifications: 34

INTRODUCTION

Thank you for choosing the JL Audio Fathom In-Ceiling Subwoofer System, also known as the ICS.

This document contains detailed instructions for the installation of the Fathom ICS enclosure. Since a portion of the enclosure will be inaccessible after installation, we strongly recommend reading these instructions completely before beginning the installation process. Please note, these instructions are for the installation of one (1) ICS enclosure. Simply repeat the steps to install additional enclosures.

FATHOM ICS SYSTEM OVERVIEW

The Fathom ICS is offered in two options:

ICS-SYS-108 includes all elements for the installation of one (1) subwoofer.

ICS-SYS-208 includes all elements for the installation of two (2) subwoofers.

Each Fathom ICS System consists of four elements:

ICS-SYS-108	ICS-SYS-208
(1) Enclosure	(2) Enclosures
(1) Subwoofer*	(2) Subwoofers*
(1) Grille Assembly **	(2) Grille Assemblies**
(1) 300W Amplifier **	(1) 600W Amplifier **
* Pre-installed in enclosure. ** Not included with enclosure.	
Each system includes specialized hardware to ensure proper installation.	

THE ENCLOSURE

The Fathom ICS enclosure utilizes extensive architectural features aimed at improving rigidity while keeping a very low profile and minimal wall thickness. A unique port design vents through a slot located at the perimeter of the driver mount to enhance efficiency and low-bass output.

The ICS enclosure is outfitted with various spacers and padding in specific areas, allowing it to only make gentle contact with its surrounding wallboard surfaces. The placement and amount of pressure applied by these pads is a critical design aspect to ensure proper fit and should not be altered in any way. Failure to use the proper enclosure and/or alteration of the spacers and padding will result in loss of performance and unwanted vibrations.

Designed to fit most in-ceiling installations, the ICS enclosure includes mounting hardware to accommodate ceiling cavities with assembled joists ranging from 16-inches to 25 ½-inches wide on center. While primarily intended for ceiling applications, the ICS enclosure is also compatible with in-wall applications with walls constructed with 2 x 6 studs or larger.

Enclosure Dimensions*
40.71 inches x 14.00 inches x 5.13 inches 1,034 mm x 355 mm x 130 mm
*Dimensions listed are approximate and do not include various spacers and padding.

THE SUBWOOFER

Derived from JL Audio's groundbreaking technologies used to develop our free-standing powered subwoofers, the 8-inch Fathom® ICS subwoofer systems deliver remarkable bass performance, while remaining largely concealed within most home audio/theater environments. The 8-inch diameter driver is smaller and easily integrates into most ceiling and wall cavities, operating through very small grilles.

THE GRILLE ASSEMBLY

The grille assembly is comprised of a removable outer metal mesh and grille tray. The grille assembly should be installed only after the surrounding wallboard and grille assembly have been painted and the room's interior is free of construction debris. A plastic paint guard is included to shield the inner black section of the grille tray from overspray during painting. The grille tray and outer metal mesh grille should be painted separately to prevent them from sticking together.

Two sets of different length thumb screws are included with the grille assembly to fit a range of wallboard thicknesses. It is critical to use the correct thumb screw length for a proper fit. Refer to the table below to select the thumb screw length that is compatible with the wallboard thickness used in your application.

Thumb Screw Length	Wallboard Thickness
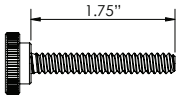 1/4-20 x 1.75 in.	1/2 in. to less than 1-1/16 in. 13 mm to less than 27 mm
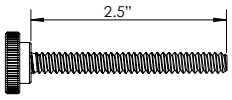 1/4-20 x 2.5 in.	1-1/16 in. to less than 1-3/4 in. 27 mm to less than 44 mm

THE AMPLIFIER

Engineered with powerful features and versatile functionality, the Fathom SA-600W is a state-of-the-art amplifier designed to power a top-flight subwoofer system in home theater and home audio systems.

Utilizing a precisely-engineered switching power supply, the SA-600W is capable of efficiently generating unclipped output voltages equivalent to 600 watts of RMS power, while remaining calm and stable. Managing all of the SA-600W's on-board features is an intuitively designed interface for adjusting all settings and controls with ease.

TOOLS FOR INSTALLATION

Below is a list of recommended tools to perform the installation of the Fathom ICS enclosure. Depending on the specifics of your installation, you may need additional tools, hardware and/or accessories. We also recommend having a second person to assist with lifting the enclosure during in-ceiling installations.

- Safety glasses
- Cordless drill/driver with #2 Phillips bit
- Wire strippers
- Wire cutters
- Pencil or Marker
- Tape measure (100-inch minimum)
- Drill bits
- Utility knife or scissors
- Right angle driver (optional)
- Drop cloth (optional)
- Masking tape (optional)

PREPPING THE WORK AREA

This manual illustrates installation in new construction homes, however Fathom ICS enclosures may also be installed in pre-existing construction applications. When working with pre-existing construction, you will need to open a ceiling cavity or stud bay to expose the joists or studs on either side of the opening. For pre-existing construction installations, we recommend using masking tape and a drop cloth to protect the home's interior from construction debris.

For your safety, make sure there are no live electrical circuits/conduits within the ceiling cavity or stud bay prior to beginning the installation.

WARNING

WHAT IS IN THE BOX?

Enclosure with Pre-Attached parts* (x1)	* Part A - Wallboard Template (x1) SKU: 152314	* Part B: Upper Stud Mount (x1) SKU: 152315	* Part C - Lower Stud Mount (x1) SKU: 152339
	* Part D - Floor Support (x1) SKU: 152340	Part E - Left Joist Mounting Brackets (x2) SKU: 193621	Part F - Right Joist Mounting Brackets (x2) SKU: 193620
	Part G - Extended Upper Stud Mount (x1) SKU: 152444	Part H - Extended Lower Stud Mount (x1) SKU: 152445	Part I - L-Bracket Extensions (x2) SKU: 152446
	Part J - L-Brackets (x4) SKU: 153923	Foam Gasket (x1)	Terminal Covers (x2)
1.00 #8 x 1.00-inch Pan Head Screws (x22)	1.50 #8 x 1.50-inch Pan Head Screws (x18)	2.00 #8 x 2.00-inch Pan Head Screws (x8)	1.25 #8 x 1.25-inch Wafer Head Screws (x42)

ENCLOSURE MOUNTING HARDWARE

The table at right lists the correct enclosure mounts to use by application type (see page 10). Before proceeding, identify and familiarize yourself with the appropriate mounts for your specific installation.

Type	Ceiling/Wall Cavity Width	Mount	Part	Note
IC-1	Joist Width Range: 16-inches to 17 ½-inches on center	Upper Stud Mount	Part B	Pre-Attached
		Lower Stud Mount	Part C	
		Left Joist Mounting Brackets (x2)	Part E	
		Right Joist Mounting Brackets (x2)	Part F	
		L-Brackets (x4)	Part J	
IC-2	Joist Width Range: >17 ½-inches to 25 ½-inches on center	Left Joist Mounting Brackets (x2)	Part E	
		Right Joist Mounting Bracket s(x2)	Part F	
		Extended Upper Stud Mount	Part G	Replaces Parts B & C
		Extended Lower Stud Mount	Part H	
		L-Bracket Extensions (x2)	Part I	Must be cut to size for joists >17 ½-inches to <24-inches on center
		L-Brackets (x4)	Part J	
IW-1	Stud Width: 16-inches on center	Upper Stud Mount	Part B	Pre-Attached
		Lower Stud Mount	Part C	
		Floor Support	Part D	
		L-Brackets (x4)	Part J	

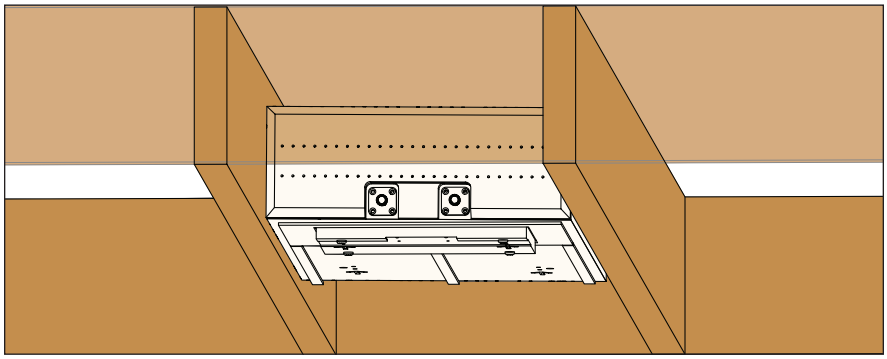

Type IC-1

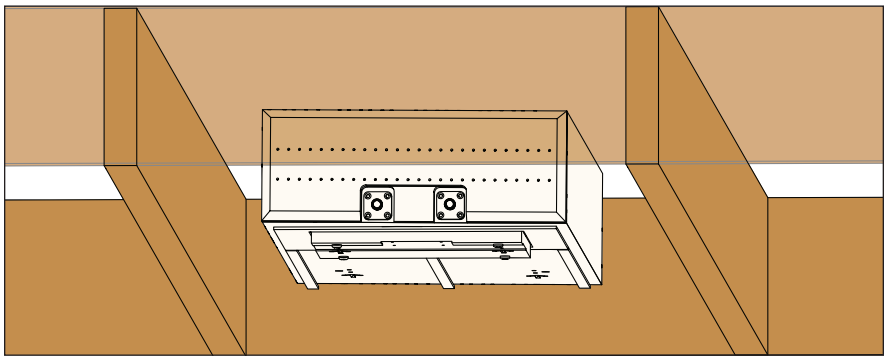

Type IC-2

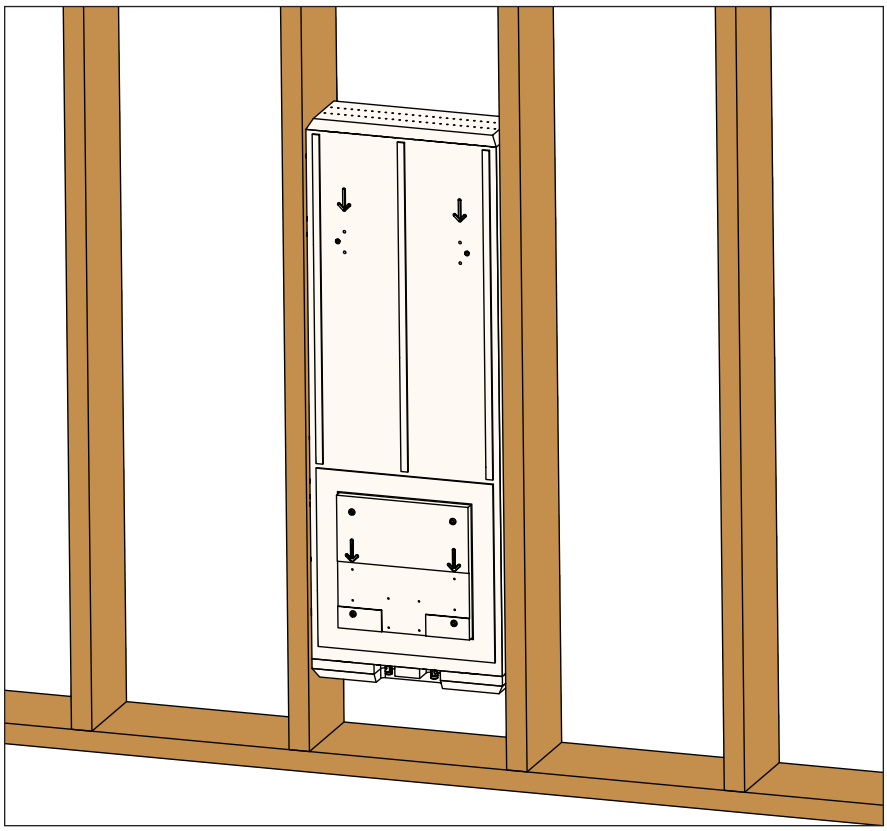

Type IW-1

ENCLOSURE MOUNTING APPLICATIONS

The Fathom ICS enclosure package includes all parts and hardware necessary for the installation of one (1) enclosure. Since a portion of the enclosure will be inaccessible after installation, we strongly recommend reading these instructions completely before beginning the installation process. To install additional enclosures, simply repeat the steps.

Designed to fit most in-ceiling installations, the ICS enclosure includes mounting hardware to accommodate ceiling cavities with assembled joists ranging from 16-inches to 25 ½-inches wide on center. While primarily intended for ceiling applications, the ICS enclosure is also compatible with in-wall applications with walls constructed from 2 x 6 studs or larger.

Refer to the figures at left to identify which installation type fits your specific application.

- **Type IC-1:** Ceiling cavities with joist widths ranging from 16-inches to 17 ½-inches on center.
- **Type IC-2:** Ceiling cavities with joist widths ranging from greater than 17 ½-inches to 25 ½-inches on center.
- **Type IW-1:** Wall cavities constructed with 2 x 6 studs or larger, assembled at 16-inches on center.

Note: This manual includes specific steps and illustrations for in-ceiling and in-wall applications. Make sure to observe the Installation Type listed at the top of the following pages for your application (IC-1, IC-2, IW-1).

IN-CEILING INSTALLATION

Evaluating the Ceiling Cavity

The ICS enclosure is designed to mount in between two joists, within a ceiling cavity, so anything coming into contact with it can lead to unwanted vibrations and rattles that cannot be accessed/corrected after the installation.

Before proceeding, verify that your ceiling cavity meets these requirements:

- At least 58-inches of unobstructed length/space
- Continuous width inside the ceiling joists, over the entire 58-inches must be no less than 14 ½-inches and no more than 24-inches.
- A minimum 5 ½-inches of height
- Joists on either side of the ceiling cavity should be straight, plumb and parallel, without any twisting or bowing.
- If your ceiling cavity has any obstructions, such as wiring, conduits or ventilation ducts, you'll need to discuss removing or relocating them with your general contractor, or you will need to choose a different ceiling cavity.

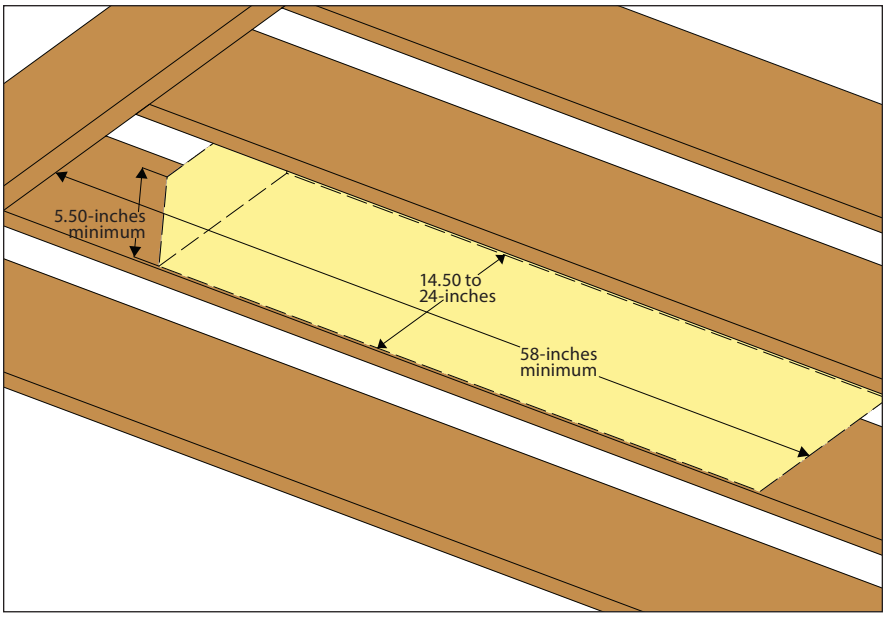

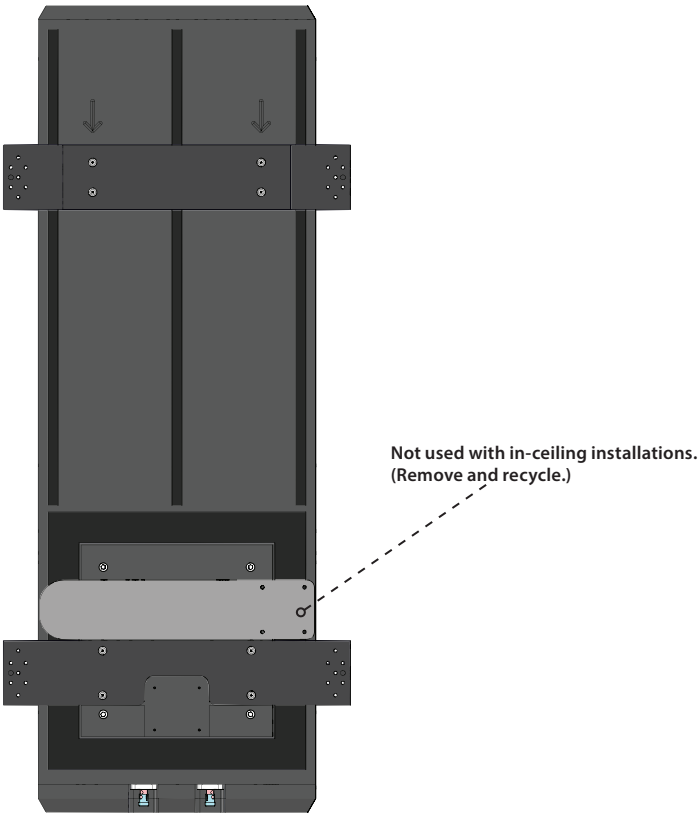

Figure 1

Remove the Floor Support (Part D)

To simplify installation, the enclosure is shipped with the following parts pre-attached:

Part A – Wallboard Template
Part B – Upper Stud Mount
Part C – Lower Stud Mount
Part D – Floor Support (shrink wrapped to enclosure)

For in-ceiling installations, the Floor Support (Part D) will not be used. Place the enclosure on a supported surface/table and remove the shrink wrap to detach the Floor Support (Part D). **(Figure 1)**

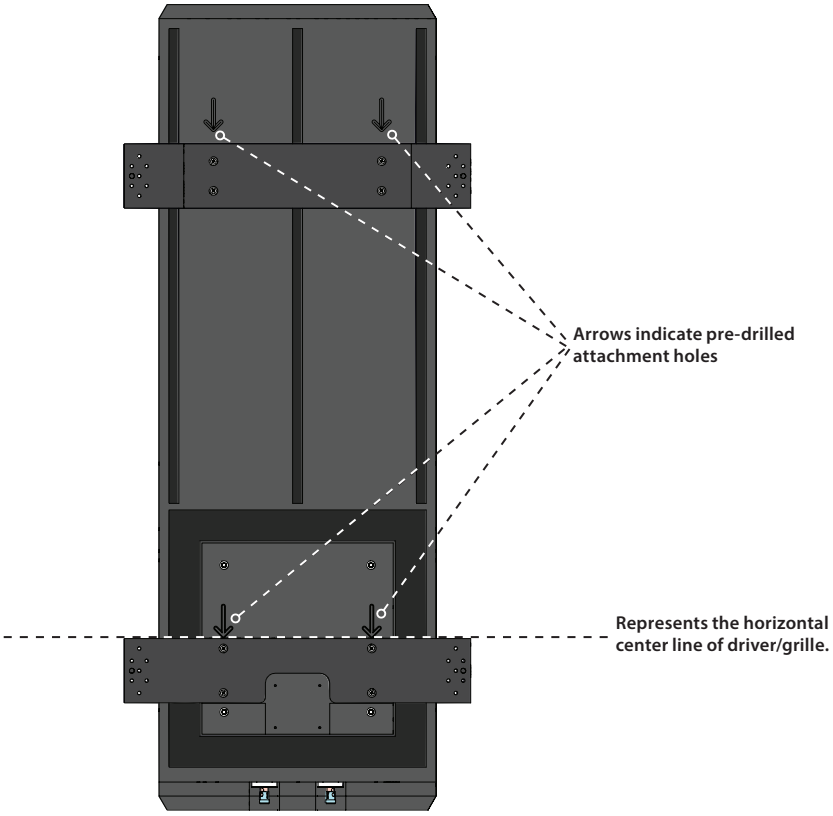

Figure 2

Stud Mount Attachment Points

The enclosure is equipped with engraved arrows that point to the approved mounting locations (pre-drilled holes) for attaching the Stud Mounts (Parts B & C) or the Extended Stud Mounts (Parts G & H) to the enclosure. **Note: Installing fasteners at any other locations is not recommended and may create air leaks in the enclosure. (Figure 2)**

Driver/Grille Center Line

The dashed line at left represents the horizontal center line of the wallboard template after the enclosure is installed. This may be used for referencing the placement of the driver/grille at its final position within the desired floor plan. **(Figure 2)**

IN-CEILING INSTALLATION
Type: IC-1

Mounting Hardware

The table at right lists the correct enclosure mounts to use for installation into ceiling cavities with joist widths ranging 16-inches to 17 ½-inches on center. Before proceeding, identify and familiarize yourself with the appropriate mounts for your specific installation.

Joist Width Range	Mount	Part	Note
16-inches to 17 ½-inches on center	Upper Stud Mount	Part B	Pre-Attached
	Lower Stud Mount	Part C	
	Left Joist Mounting Brackets (x2)	Part E	
	Right Joist Mounting Brackets (x2)	Part F	
	L-Brackets (x4)	Part J	

Install Joist Mounting Brackets

Mark the bottom edge of each ceiling joist at the desired position of the center of the driver/grille within the floor plan. **Note: From this mark, there must be at least 17-inches of unobstructed space to the nearest obstacle and at least 41-inches of unobstructed space in the opposite direction.** Next, place a second mark 25-inches away from each of the first marks.

Position the Joist Mounting Brackets (Parts E & F) at the inscribed marks and fully install three #8 x 1.25-inch wafer head screws into each. **Note: Ensure that all ends of the mounting brackets are oriented as shown with the long side of each bracket flush with the inside face of each joist. (Figure 3)**

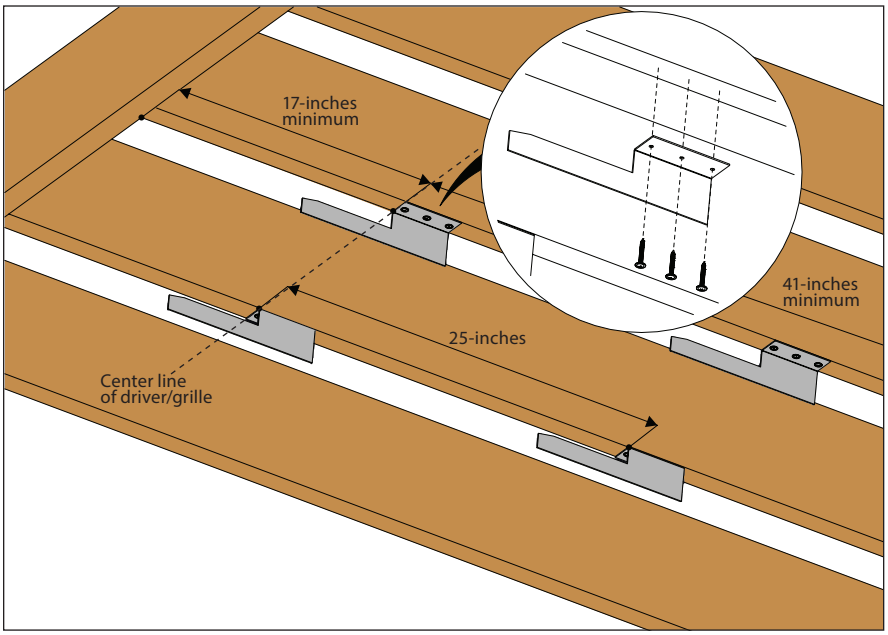

Figure 3

IN-CEILING INSTALLATION
Type: IC-1

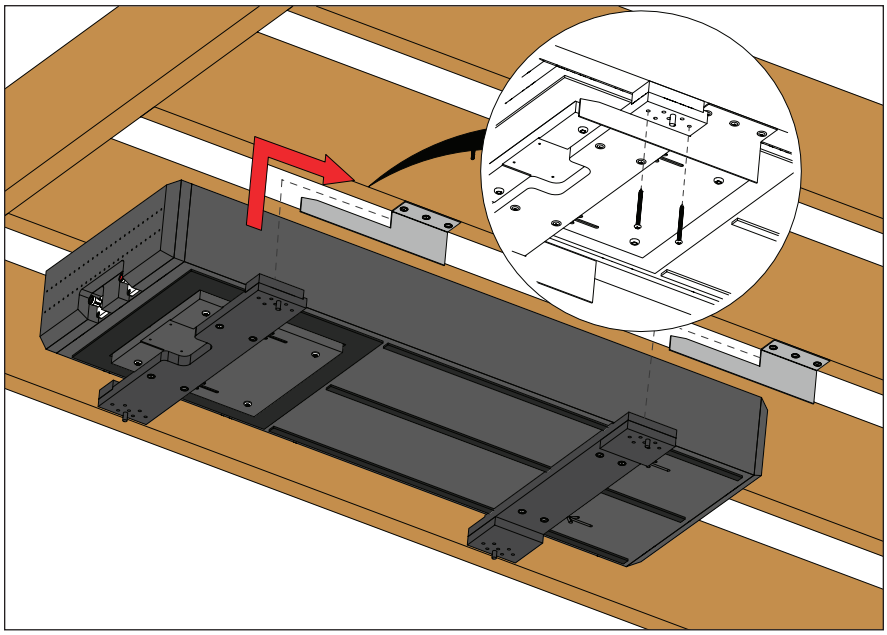

Figure 4

Test Fit Enclosure

With the assistance of a helper, lift the enclosure into the ceiling cavity, positioning the Stud Mounts (Parts B & C) above the ends of the Joist Mounting Brackets (Parts E & F) and slide the enclosure inward until the Stud Mounts (Parts B & C) contact the Joist Mounting Brackets (Parts E & F). To prevent the enclosure from falling out, ensure that the exposed dowel pins at the ends of the Stud Mounts (Parts B & C) are located on the outside of the Joist Mounting Brackets (Parts E & F). **(Figure 4)**

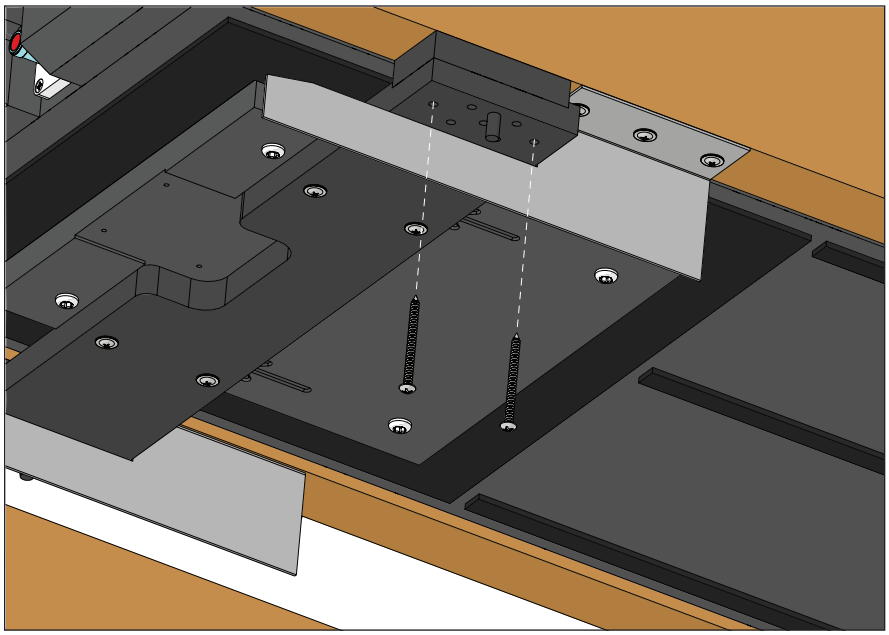

Figure 5

Set the Enclosure's Final Position

Adjust the enclosure's position to the middle of the ceiling cavity. Centering the enclosure within the ceiling cavity, so that no sides of the enclosure are in contact with the joists, will reduce the potential for unwanted noise and vibration.

Install two #8 x 2.00-inch pan head screws through the guide holes located at each end of the Stud Mounts (Parts B & C) to set the enclosure's final position. Select the guide hole locations that will place each screw at or near the center of each joist. **(Figure 5)**

Note: As this is the last opportunity before permanently mounting the enclosure, we highly recommend to double-check that the position of the driver/grille (Wallboard Template - Part A) is at the desired location within the floor plan.

IN-CEILING INSTALLATION
Type: IC-1

Mounting the Enclosure

Place an L-Bracket (Part J) at one of the corner ends of the enclosure, with its slotted openings positioned over the pilot holes. Within each slotted opening, select two non-adjacent pilot holes (spaced one to two holes apart) and fully install two #8 x 1.00-inch pan head screws. Then, partially back out each screw, leaving just one to two threads exposed beneath each screw head. The L-Bracket should remain loose, allowing it to slide for adjustment during installation. **(Figure 6)**

Slide the L-Bracket (Part J) outward and secure to the ceiling joist using six #8 x 1.25-inch wafer head screws. Repeat this procedure with the remaining L-Brackets (Part J) at the remaining corner ends of the enclosure. Next, fully tighten all screws previously installed in the slotted openings and lock the position of all L-Brackets (Part J) by installing a #8 x 1.00-inch pan head screw into one of the two holes located in between the slotted openings. **(Figure 7)**

Uninstall all screws from all Joist Mounting Brackets (Parts E & F) and remove for recycling. Uninstall all screws from both Stud Mounts (Parts B & C) and remove for recycling.

PROCEED TO ROUTING THE SPEAKER CABLE (page 30)

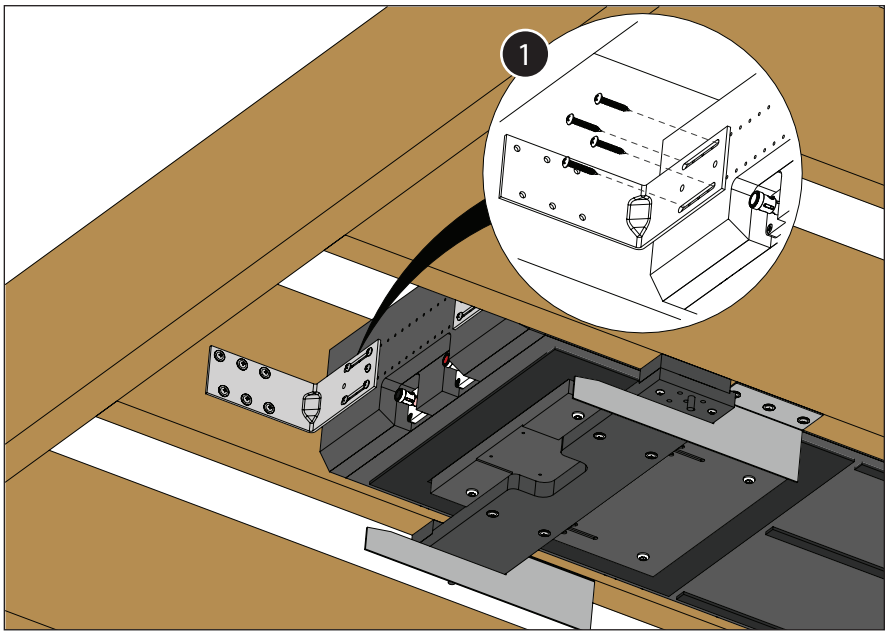

Figure 6

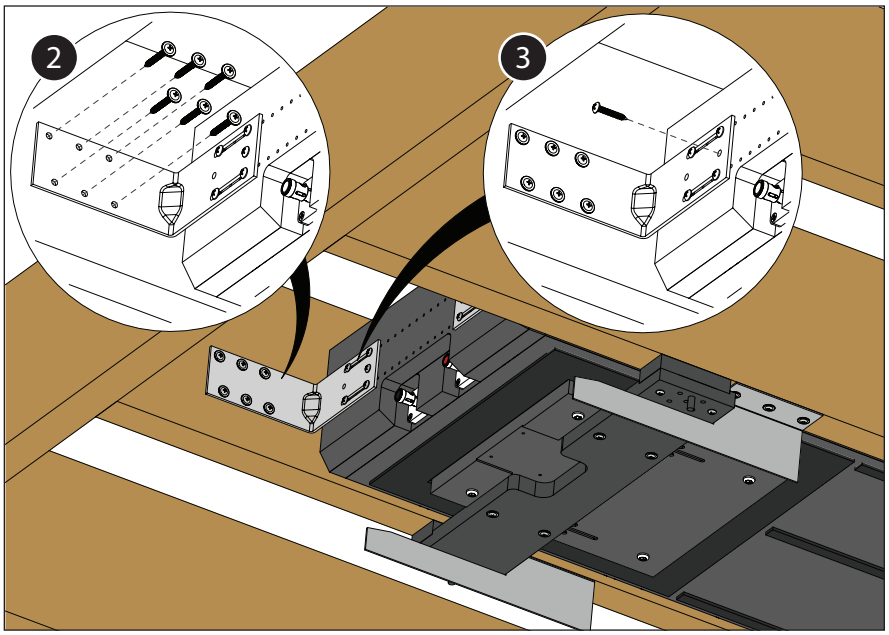

Figure 7

This page intentionally left blank.

IN-CEILING INSTALLATION
Type: IC-2

Mounting Hardware

The table at right lists the correct enclosure mounts to use for installation into ceiling cavities with joist widths ranging from greater than 17 ½-inches to 25 ½-inches on center. Before proceeding, identify and familiarize yourself with the appropriate mounts for your specific installation.

Joist Width Range	Mount	Part	Note
>17 ½-inches to 25 ½-inches on center	Left Joist Mounting Brackets (x2)	Part E	
	Right Joist Mounting Brackets (x2)	Part F	
	Extended Upper Stud Mount	Part G	Replaces Parts B & C
	Extended Lower Stud Mount	Part H	
	L-Bracket Extensions (x2)	Part I	Cut to size for joists >17 ½-inches to <24-inches on center
	L-Brackets (x4)	Part J	

Install Joist Mounting Brackets

Mark the bottom edge of each ceiling joist at the desired position of the center of the driver/grille within the floor plan. **Note: From this mark, there must be at least 17-inches of unobstructed space to the nearest obstacle and at least 41-inches of unobstructed space in the opposite direction.** Next, place a second mark 25-inches away from each of the first marks.

Position the Joist Mounting Brackets (Parts E & F) at the inscribed marks and fully install three #8 x 1.25-inch wafer head screws into each. **Note: Ensure that all ends of the mounting brackets are oriented as shown with the long side of each bracket flush with the inside face of each joist. (Figure 8)**

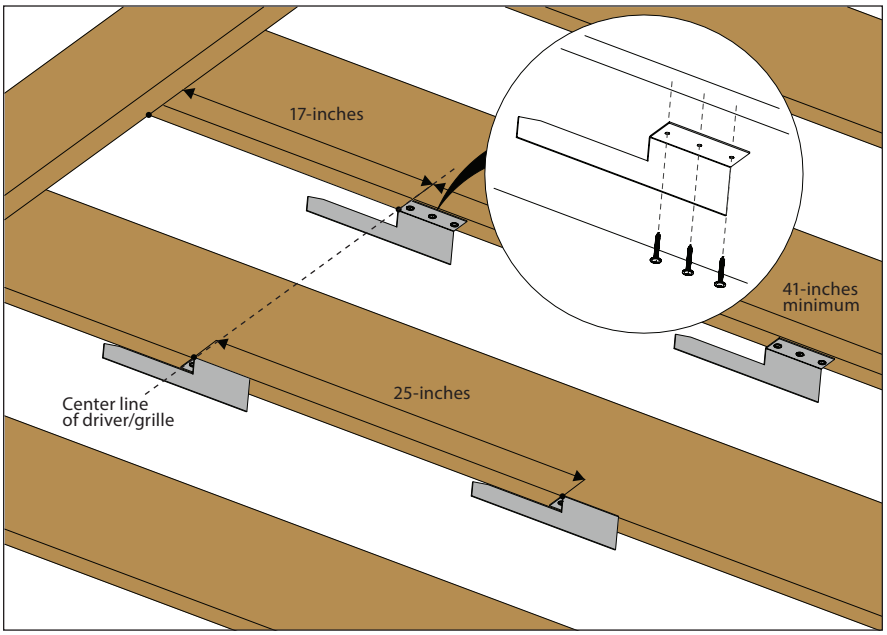

Figure 8

IN-CEILING INSTALLATION
Type: IC-2

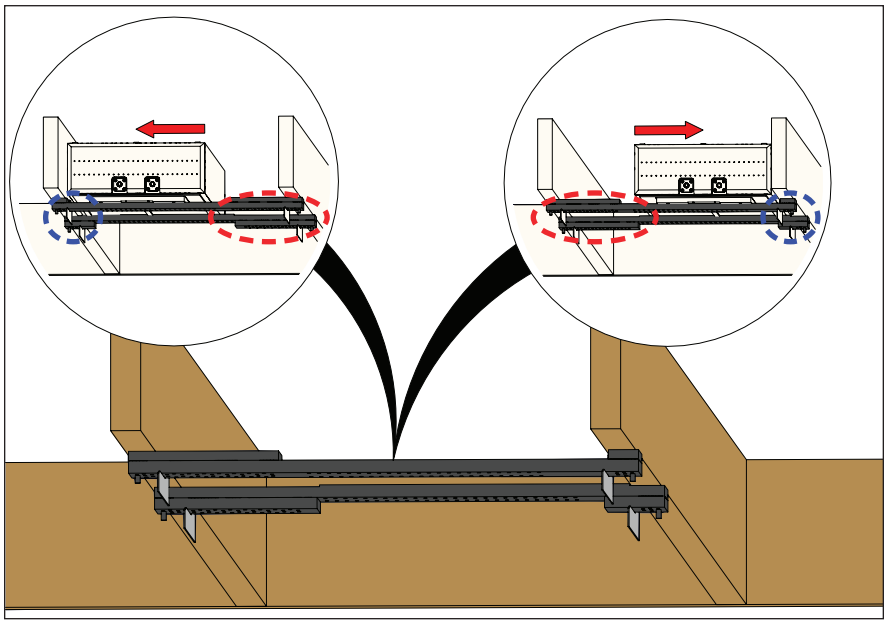

Figure 9

Understanding the Extended Stud Mounts

The Extended Stud Mounts (Parts G & H) are designed so the enclosure can be positioned at the center of the ceiling cavity or towards a joist, away from the wide end of the Extended Stud Mounts (Parts G & H).

= Wide End

= Narrow End

To position the enclosure in the opposite direction, simply rotate the orientation of the Extended Stud Mounts (Parts G & H).

Note: Regardless of orientation, each Extended Stud Mount (Parts G & H) must remain within its respective Joist Mounting Bracket (Parts E & F). **(Figure 9)**

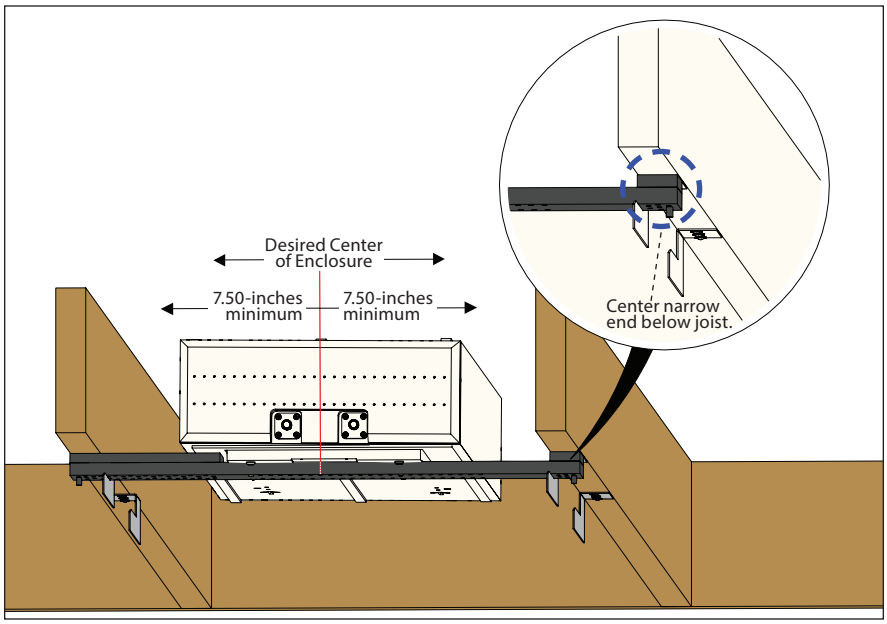

Figure 10

Determine the Enclosure's Center

Place the Extended Lower Stud Mount (Part H) into the bottom Joist Mounting Brackets (Parts E & F), with its narrow end, centered below the joist. **(Figure 10)**

Mark a line on the edge of the Extended Lower Stud Mount (Part H), at the desired center position of the enclosure. **Note: The enclosure's final position within the ceiling cavity requires at least 7.50-inches of unobstructed space, in either direction from the enclosure's center, towards the bordering joists.**

After marking the enclosure's desired center position, transfer (copy) this mark from the Extended Lower Stud Mount (Part H) to the Extended Upper Stud Mount (Part G).

IN-CEILING INSTALLATION
Type: IC-2

Attach the Extended Stud Mounts

The pre-attached Stud Mounts (Parts B & C) will not be used in this application. Place the enclosure on a supported surface/table and remove the Stud Mounts (Parts B & C) for recycling (retain the #8 x 1.25-inch wafer head screws).

Position the Extended Stud Mounts (Parts G & H) on the enclosure, with the inscribed center marks aligned with the vertical center of the enclosure. Attach the the Extended Stud Mounts (Parts G & H) to the enclosure using the wafer head screws that were removed earlier. Make sure to install the wafer head screws into the same mounting holes of the enclosure that were used for the pre-attached Stud Mounts (Parts B & C) removed earlier. **(Figure 11)**

Note: The enclosure is equipped with engraved arrows that point to the approved mounting locations (pre-drilled holes) for attaching the Stud Mounts to the enclosure. Installing fasteners at any other locations is not recommended and may create air leaks in the enclosure.

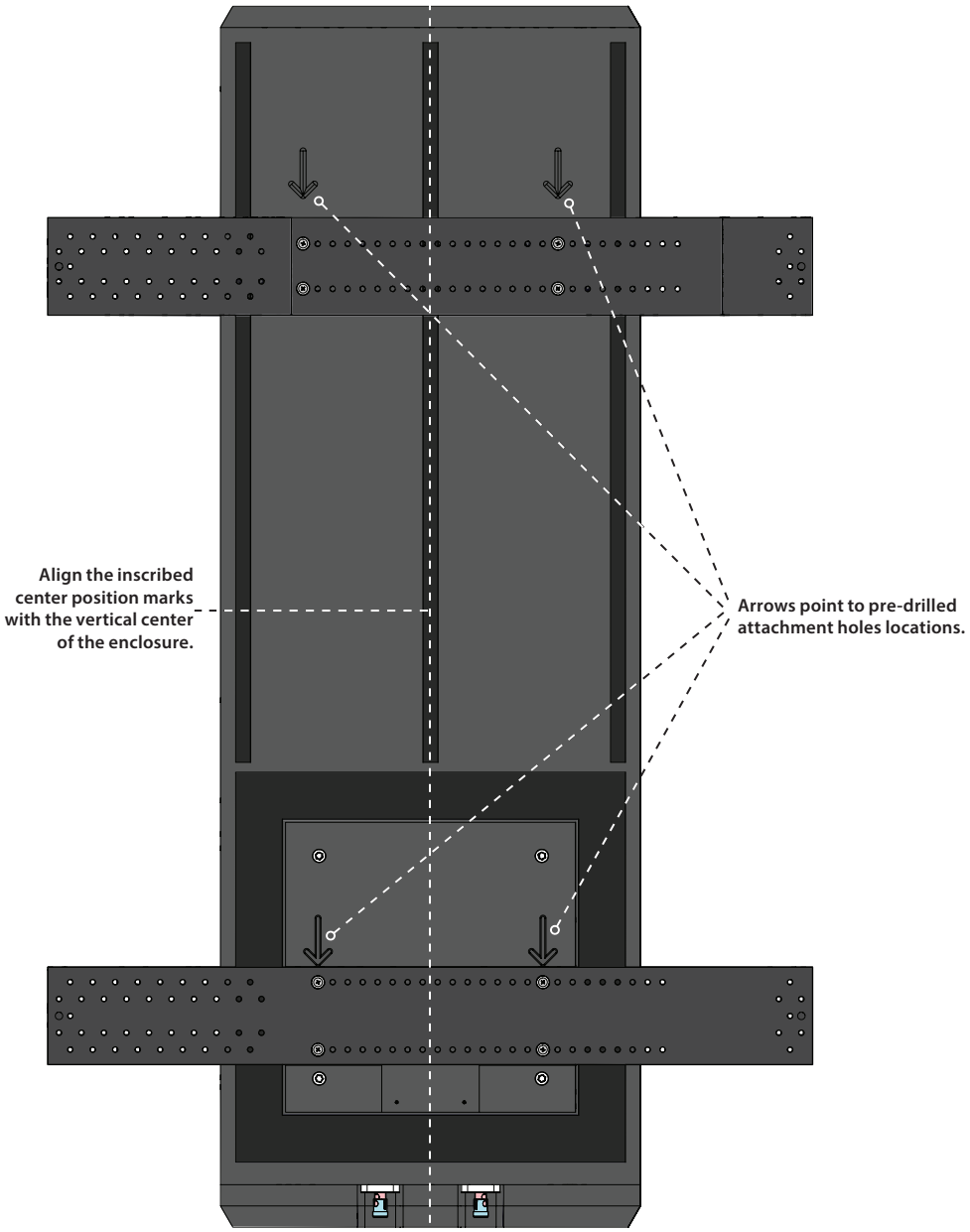

Figure 11

IN-CEILING INSTALLATION
Type: IC-2

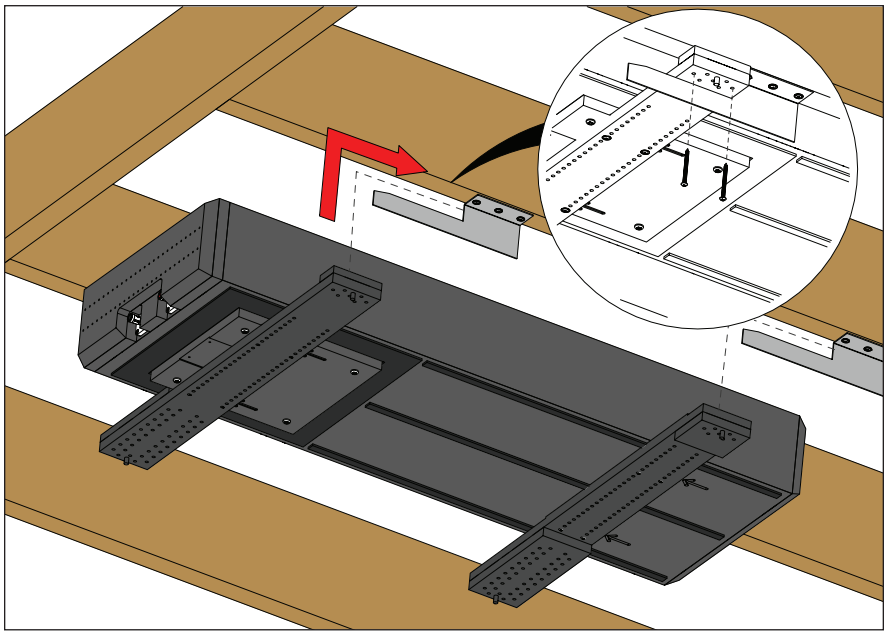

Figure 12

Test Fit Enclosure

With the assistance of a helper, lift the enclosure into the ceiling cavity, positioning the Extended Stud Mounts (Parts G & H) above the ends of the Joist Mounting Brackets (Parts E & F) and slide the enclosure inward until the Extended Stud Mounts (Parts G & H) contact the Joist Mounting Brackets (Parts E & F). To prevent the enclosure from falling out, ensure that the exposed dowel pins at the ends of the Extended Stud Mounts (Parts G & H) are located on the outside of the Joist Mounting Brackets (Parts E & F). **(Figure 12)**

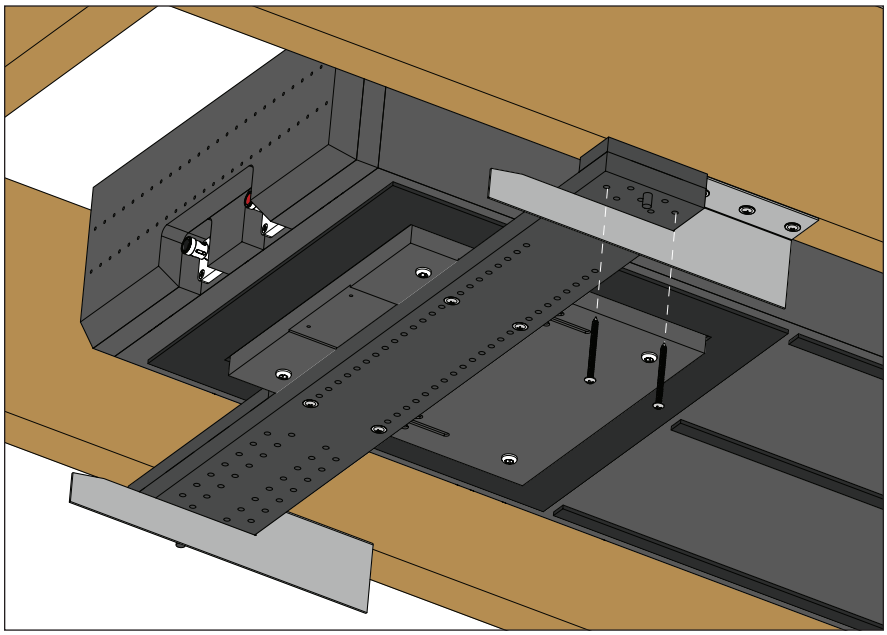

Figure 13

Set the Enclosure's Final Position

Adjust the position of the enclosure so that the narrow ends of the Extended Stud Mounts (Parts G & H) are centered below the joists. Ensuring that no sides of the enclosure are in contact with the joists, will reduce the potential for unwanted noise and vibration.

Install two #8 x 2.00-inch pan head screws through the guide holes located at each end of the Extended Stud Mounts (Parts G & H) to set the enclosure's final position. Select the guide hole locations that will place each screw at or near the center of each joist. **(Figure 13)**

Note: As this is the last opportunity before permanently mounting the enclosure, we highly recommend to double-check that the position of the driver/grille (Wallboard Template - Part A) is at the desired location within the floor plan.

IN-CEILING INSTALLATION
Type: IC-2

Understanding the L-Bracket Extensions

Designed to attach to the top and bottom ends of the enclosure, the L-Bracket Extensions (Part I) permit the enclosure to be installed in ceiling cavities with joist widths ranging from greater than 17 ½-inches to 25 ½-inches on center.

The L-Bracket Extensions (Part I) are equipped with pre-drilled pilot holes that align with pre-drilled pilot holes in the enclosure. When mounting, the L-Bracket Extensions (Part I) should be centered between the ceiling joists, with both sets of pilot holes aligned. Once installed, there should be a small space at each end, between the L-Bracket Extensions (Part I) and the adjacent ceiling joists. **(Figure 14)**

Note: For ceiling cavities with joist widths that are greater than 17 ½-inches but less than 24-inches, it will be necessary to cut the L-Bracket Extensions (Part I). Measure the width between the ceiling joists and cut the L-Bracket Extensions (Part I) to a width of 1.00-inch less than the measured dimension. It does not matter which end of the L-Bracket Extensions (Part I) the excess material is removed from. The reduced size will permit the L-Bracket Extensions (Part I) to fit within the narrower joist width, leaving a small space at each end once installed. **(Figure 15)**

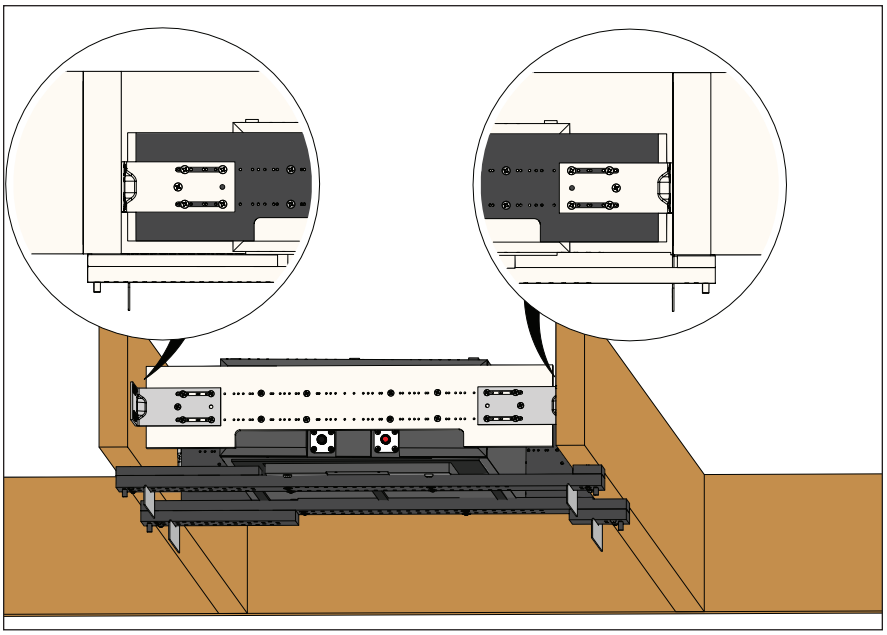

Figure 14

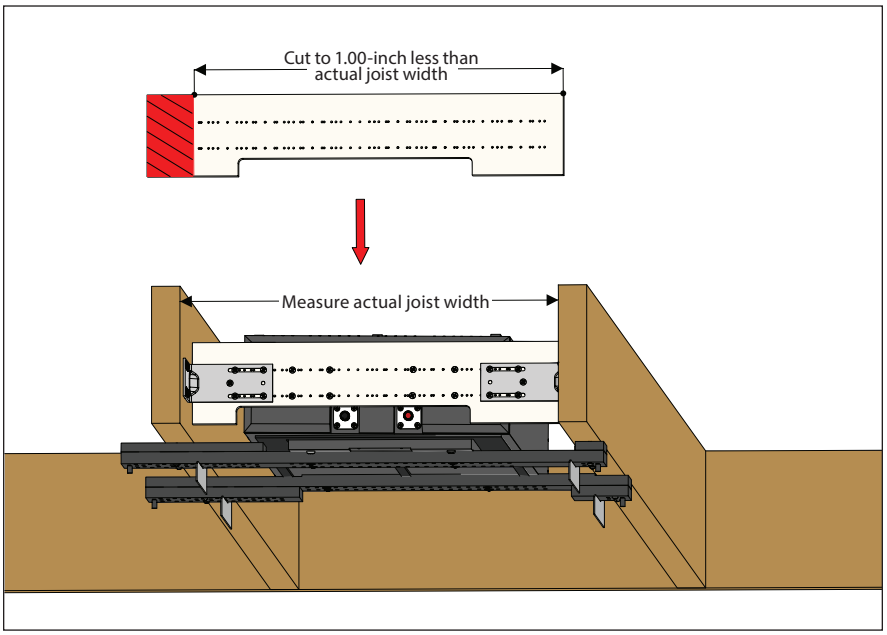

Figure 15

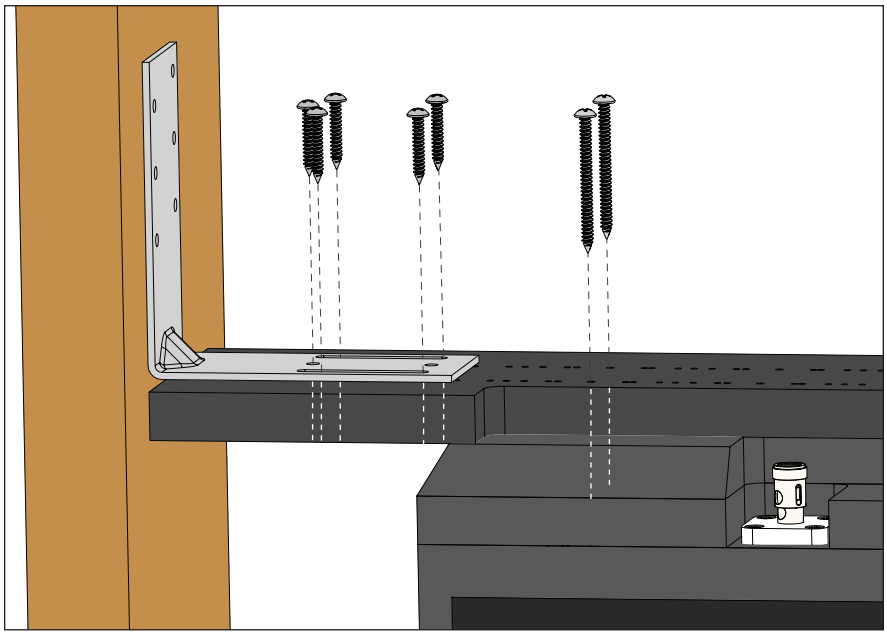

Figure 16

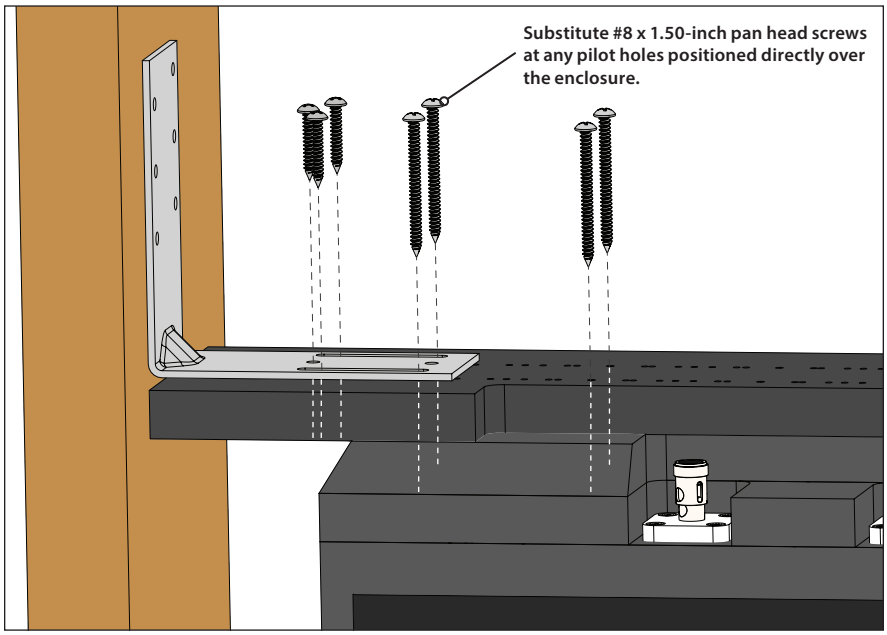

Figure 17

IN-CEILING INSTALLATION Type: IC-2

Understanding the L-Bracket Extensions continued...

The L-Bracket Extensions (Part I) and L-Brackets (Part J) are attached to the enclosure using #8 pan head screws. Refer to the info listed below for specific screw quantity and length criteria. **(Figure 16 & 17)**

- A total of (8) #8 x 1.50-inch pan head screws must be used to attach each L-Bracket Extension (Part I) to the enclosure. Screws should be evenly spaced and not intrude upon L-Bracket installation. **Note: Any #8 x 1.50-inch pan head screws substituted to attach the L-Brackets to the L-Bracket Extensions (below) may count towards the (8) screw total requirement (above).**
- Each L-Bracket (Part J) attaches to the L-Bracket Extensions (Part I) using (4) #8 x 1.00-inch pan head screws. **Note: Substitute #8 x 1.50-inch pan head screws at any pilot holes positioned directly over the enclosure.**
- Use (1) #8 x 1.00-inch pan head screws to lock the position of each L-Bracket (Part J).

IN-CEILING INSTALLATION
Type: IC-2

Mounting the Enclosure

Referring to the info on pages 22 and 23, position one L-Bracket Extension (Part I) at each end of the enclosure, centered between the ceiling joists, with its pre-drilled pilot holes aligned with the pilot holes in the enclosure. Next, fully install four #8 x 1.50-inch pan head screws into each L-Bracket Extension (Part I), with the screws evenly spaced, while avoiding the L-Bracket (Part J) mounting locations. **Note: The L-Bracket Extensions (Part I) should be positioned with the notch cutout pointing downward. Once installed, there should be a small space at each end, in between the L-Bracket Extensions (Part I) and the adjacent ceiling joists. (Figure 18)**

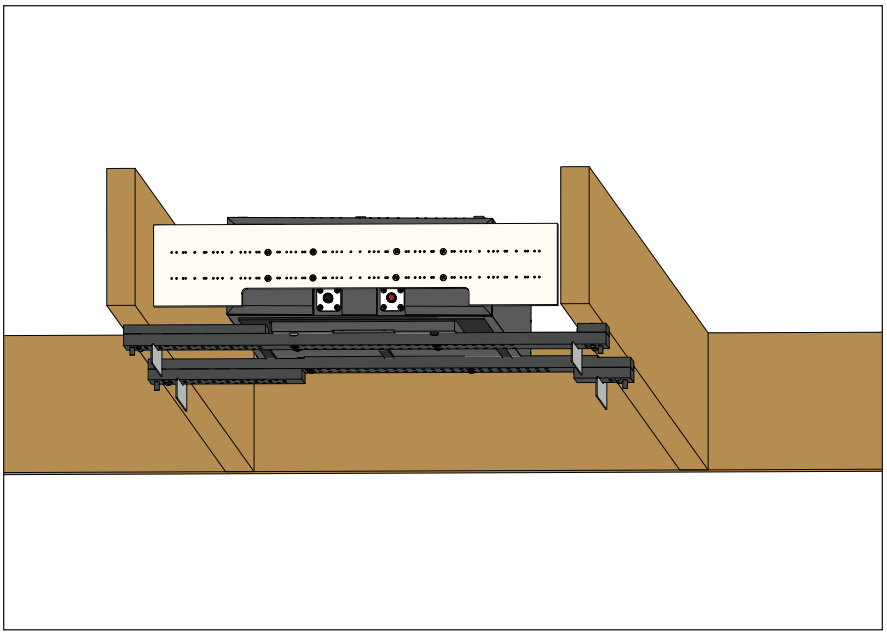

Figure 18

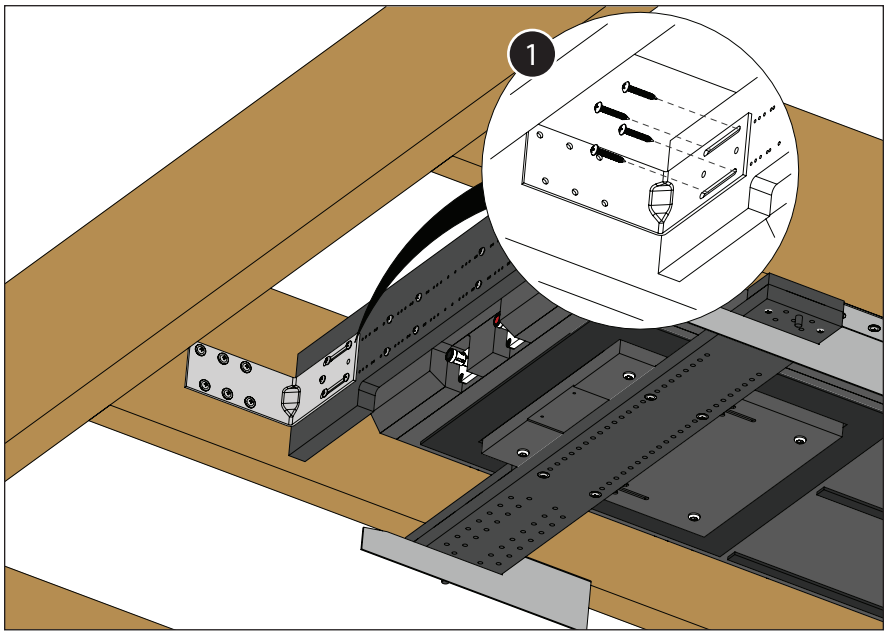

Figure 19

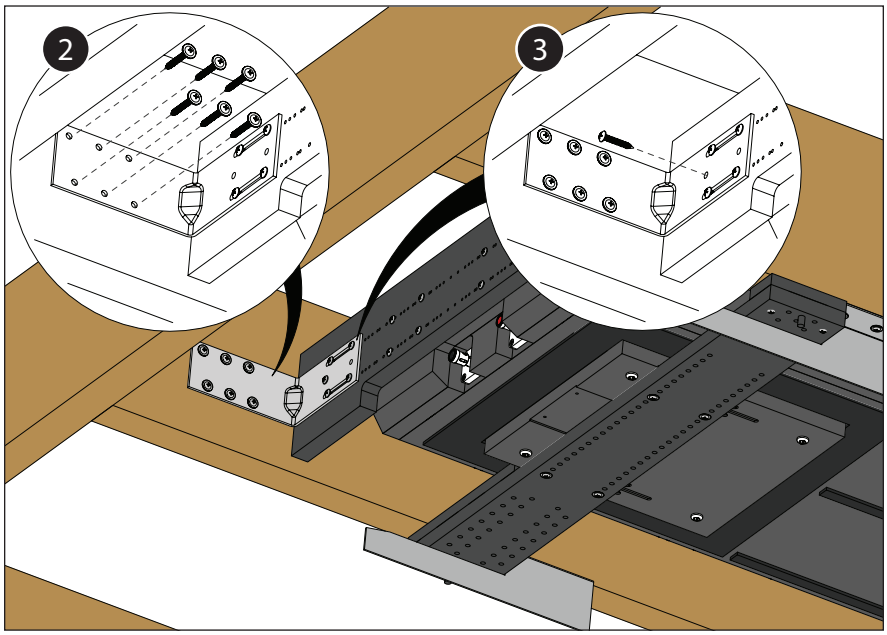

Figure 20

IN-CEILING INSTALLATION Type: IC-2

Mounting the Enclosure cont'd...

Place an L-Bracket (Part J) at one of the corner ends of the enclosure, with its slotted openings positioned over the pilot holes. Select two, non-adjacent pilot holes within each slotted opening (one to two holes apart) and fully install two #8 x 1.00-inch pan head screws. **Note: Substitute #8 x 1.50-inch pan head screws at any pilot holes positioned directly over the enclosure.** Then, partially back out each screw, leaving just one to two threads exposed beneath each screw head. The L-Bracket should remain loose, allowing it to slide for adjustment during installation. **(Figure 19)**

Slide the L-Bracket (Part J) outward and secure to the ceiling joist using six #8 x 1.25-inch wafer head screws. Repeat this procedure with the remaining L-Brackets (Part J) at the remaining corner ends of the enclosure. Next, fully tighten all screws previously installed in the slotted openings and lock the position of all L-Brackets (Part J) by installing a #8 x 1.00-inch pan head screw into one of the two holes located in between the slotted openings. **(Figure 20)**

Uninstall all screws from all Joist Mounting Brackets (Parts E & F) and remove for recycling. Uninstall all screws from both Extended Stud Mounts (Parts G & H) and remove for recycling.

PROCEED TO ROUTING THE SPEAKER CABLE (page 30)

IN-WALL INSTALLATION
Type: IW-1

Evaluating the Wall Cavity

The ICS enclosure can be mounted in between two studs, within a wall cavity, constructed from 2 x 6 studs or larger. Once installed, anything coming into contact with it can lead to unwanted vibrations and rattles that cannot be accessed/corrected after the installation. **(Figure 21)**

Before proceeding, verify that your wall cavity meets these requirements:

- At least 58-inches of unobstructed height (measured from the floor)
- Continuous width inside the studs, over the entire 58-inches must be no less than 14 ½-inches and no greater than 15 ½-inches.
- A minimum 5 ½-inches of depth
- Studs on either side of the wall cavity should be straight, plumb and parallel, without any twisting or bowing.
- If your stud bay has any obstructions, such as wiring, conduits or cross-members, you'll need to discuss removing or relocating them with your general contractor, or you will need to choose a different stud bay.

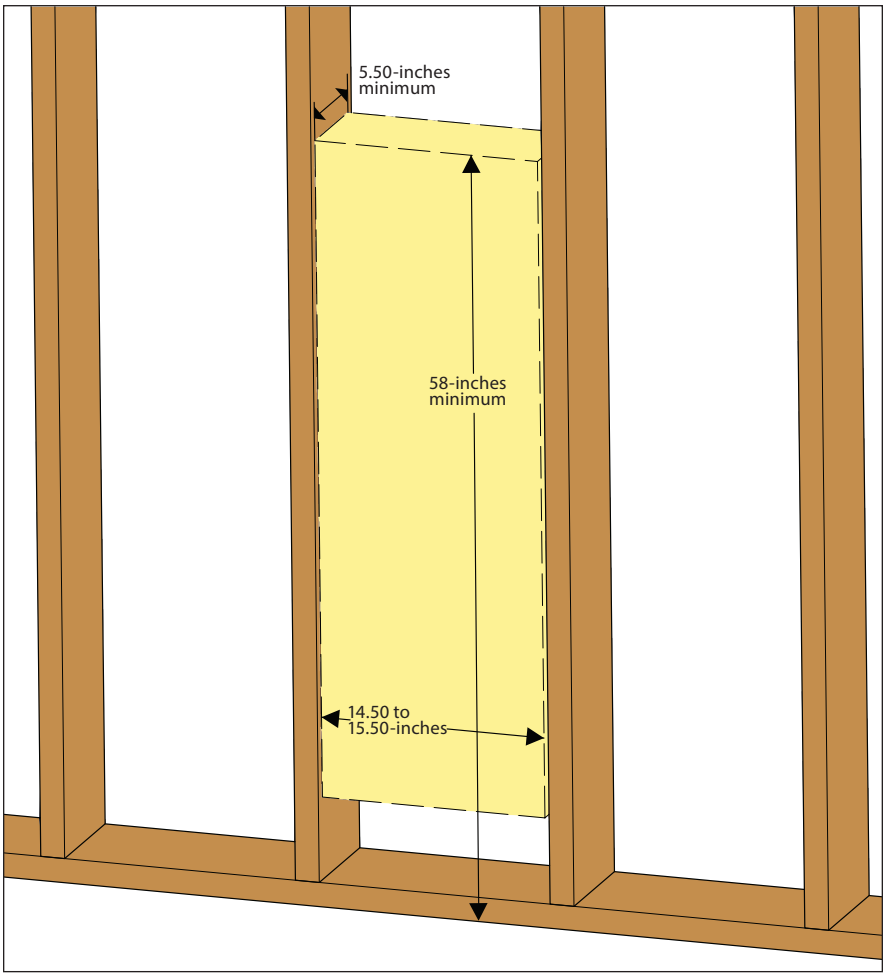

Figure 21

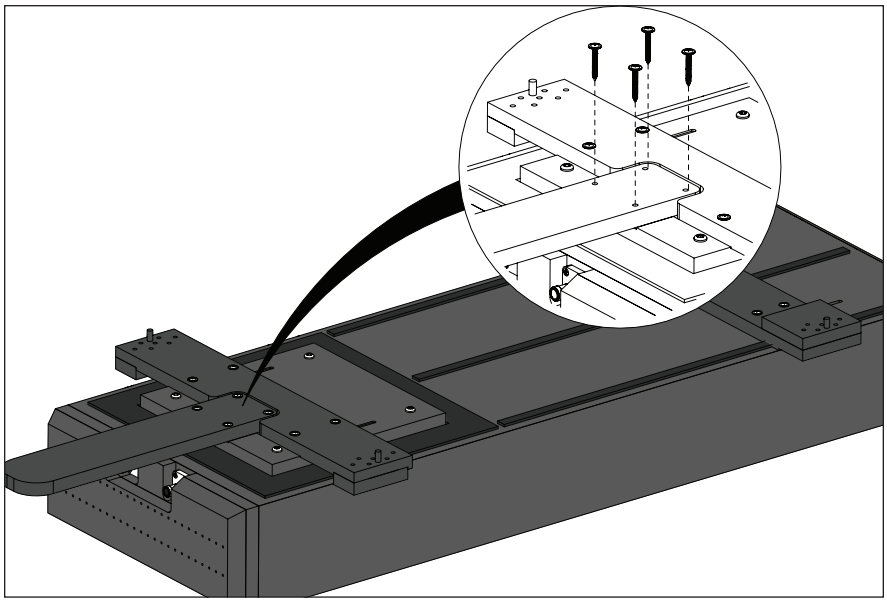

Figure 22

IN-WALL INSTALLATION
Type: IW-1

Attach the Floor Support (Part D)

To simplify installation, the enclosure is shipped with the following parts pre-attached:

Part A – Wallboard Template
Part B – Upper Stud Mount
Part C – Lower Stud Mount
Part D – Floor Support (shrink wrapped to enclosure)

Place the enclosure on a supported surface/table and remove the shrink wrap from the Floor Support (Part D).

Position the Floor Support (Part D) in the recessed area of the Wallboard Template (Part A) and Lower Stud Mount (Part C). Using the predrilled pilot holes as guides, install four #8 x 1.25-inch wafer head screws to attach the Floor Support (Part D) to the Wallboard Template (Part A) **(Figure 22)**

IN-WALL INSTALLATION
Type: IW-1

Set the Enclosure Position

Place the enclosure into the wall cavity, with both Stud Mounts (Parts B & C) pressed against the stud faces and supported by the Floor Support (Part D).

Using a level and the ends of the Stud Mounts (Parts B & C) as guides, adjust the enclosure's horizontal position to the middle of the wall cavity. Centering the enclosure's position within the wall cavity, so that no sides of the enclosure are in contact with the studs, will reduce the potential for unwanted noise and vibration.

Install two #8 x 2.00-inch pan head screws through the guide holes located at each end of the Stud Mounts (Parts B & C) to set the enclosure's final position. Select the guide hole locations that will place each screw at or near the center of each stud. **(Figure 23)**

Note: As this is the last opportunity before permanently mounting the enclosure, we highly recommend to double-check that the position of the driver/grille (Wallboard Template - Part A) is at the desired location within the floor plan.

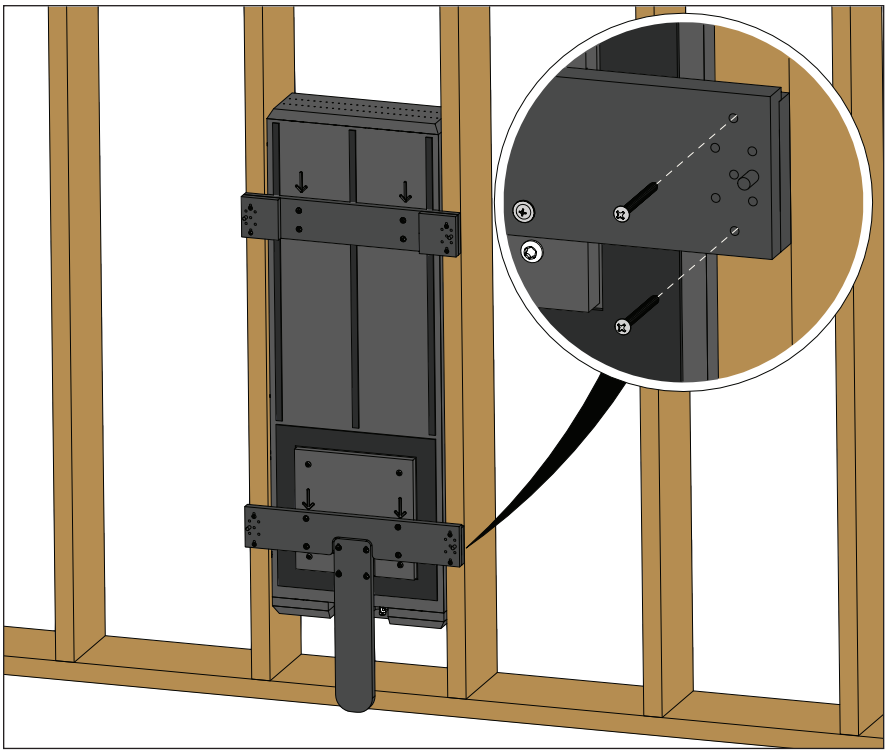

Figure 23

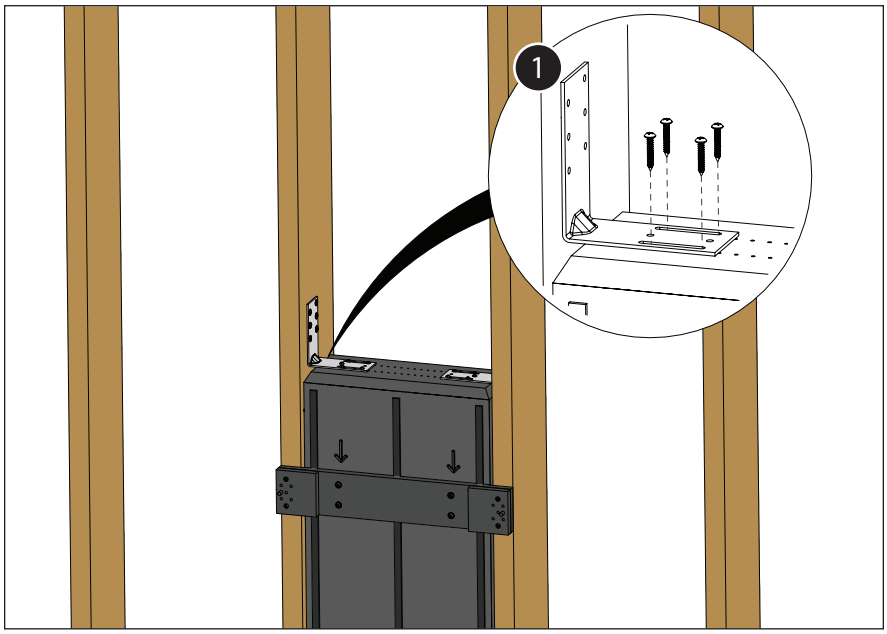

Figure 24

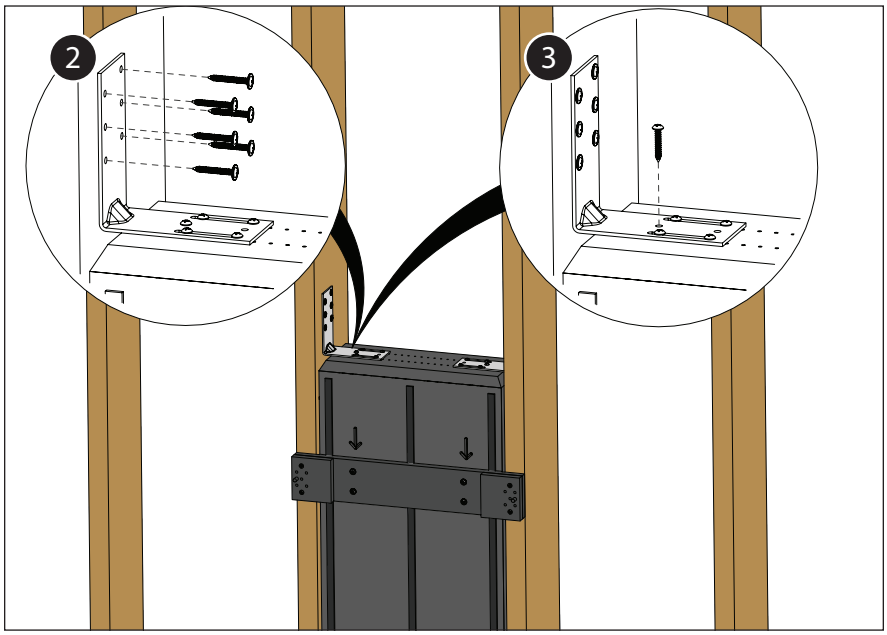

Figure 25

IN-WALL INSTALLATION
Type: IW-1

Mounting the Enclosure

Place an L-Bracket (Part J) at one of the corner ends of the enclosure, with its slotted openings positioned over the pilot holes. Select two, non-adjacent pilot holes within each slotted opening (one to two holes apart) and fully install two #8 x 1.00-inch pan head screws. Then, partially back out each screw, leaving just one to two threads exposed beneath each screw head. The L-Bracket should remain loose, allowing it to slide for adjustment during installation. **(Figure 24)**

Slide the L-Bracket (Part J) outward and secure to the stud using six #8 x 1.25-inch wafer head screws. Repeat this procedure with the remaining L-Brackets (Part J) at the remaining corner ends of the enclosure. Next, fully tighten all screws previously installed in the slotted openings and lock the position of all L-Brackets (Part J) by installing a #8 x 1.00-inch pan head screw into one of the two holes located in between the slotted openings. **(Figure 25)**

PRO-TIP:
You may find it easier to install the L-Brackets (Part J) at the bottom end of the enclosure using a right-angle drill/driver.

Uninstall all screws from both Stud Mounts (Parts B & C) and remove for recycling. Uninstall the all screws from the Floor Support (Part D) and remove for recycling.

PROCEED TO ROUTING THE SPEAKER CABLE (page 30)

ROUTING THE SPEAKER CABLE

Route speaker cable to the push terminals located at the bottom of the enclosure and remove the outer jacketing to expose the individual wires. Two rubber covers are included to insulate the speaker terminals. Feed the individual wires through each rubber cover and remove the wire insulation.

While observing correct polarity, connect the individual wires to the push terminals, then slide a rubber cover over each terminal. **(Figure 26)**

Note: To reduce the potential for unwanted noise and vibration, secure the speaker cable and individual wires so they do not come into contact with any surrounding parts (enclosure, mounting brackets, joists, studs, wallboard surfaces or any other surfaces within the ceiling cavity). Any loose contact point may lead to undesirable rattles or buzzing, which may be inaccessible once the surrounding wallboard has been installed.

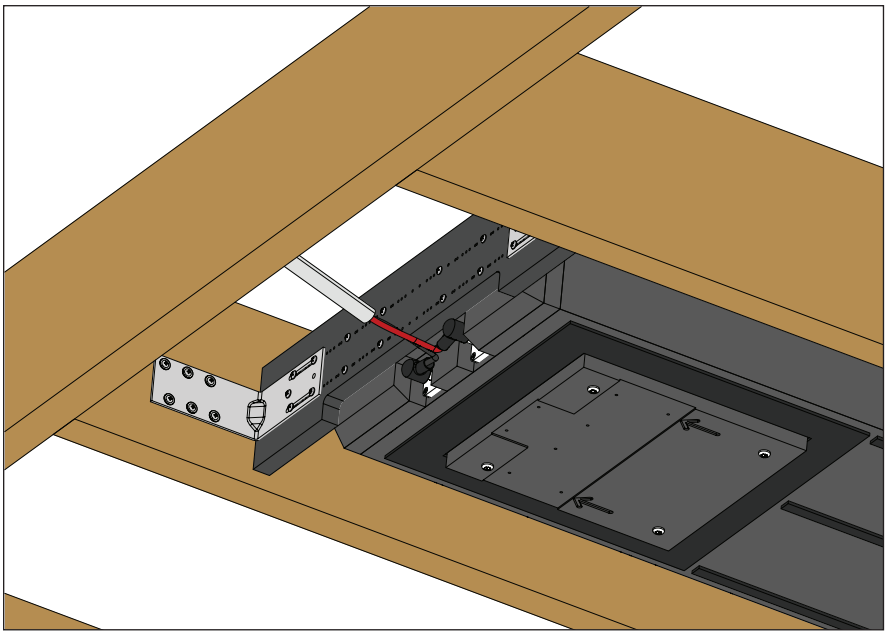

Figure 26

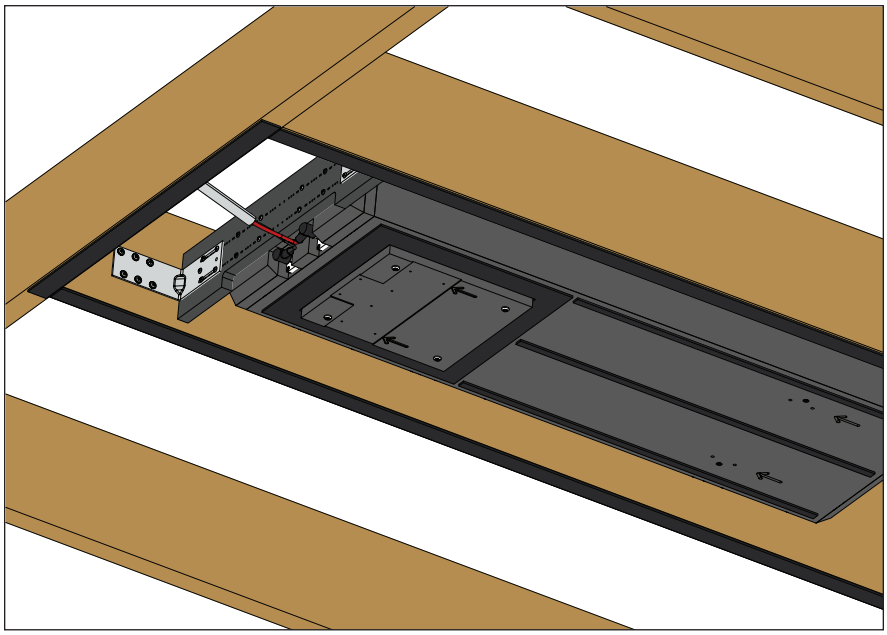

Figure 27

FOAM GASKET INSTALLATION

The included energy absorbing adhesive foam gasket strip is used to reduce the potential for noise and vibration between the joists/studs and wallboard.

Remove the backing and firmly press the foam gasket strip to all joist/stud faces surrounding the enclosure. Use a utility knife or scissors to cut and trim the edges of the foam gasket strip. **(Figure 27)**

Install the Wallboard

Install the surrounding wallboard using the Wallboard Template (Part A) as a hard edge. The surrounding wallboard should be installed flush against the edge of the wallboard template on all four sides.

Note: It is critical that any gaps between the wallboard template and surrounding wallboard do not exceed 1/8-inch. Use joint compound to fill any spaces greater than 1/8-inch. Once installed, the surrounding wallboard should be painted.

GRILLE INSTALLATION PROCEDURE

Before you Begin

The following instructions assume the ICS Enclosure has already been installed.

The Grille Assembly

The grille assembly is comprised of a removable outer metal mesh and grille tray. The grille assembly should be installed only after the surrounding wallboard and grille assembly have been painted and the room's interior is free of construction debris. A plastic paint guard is included to shield the inner black section of the grille tray from overspray during painting. The grille tray and outer metal mesh grille should be painted separately to prevent them from sticking together.

Two sets of different length thumb screws are included with the grille assembly to fit a range of wallboard thicknesses. It is critical to use the correct thumb screw length for a proper fit. Refer to the table at right to select the thumb screw length that is compatible with the wallboard thickness used in your application.

Wallboard Template Removal

To remove the Wallboard Template (Part A), uninstall the four 1/4 – 20 x 1.25-inch, T27 machine screws and lift it away from the enclosure. **(Figure 1)**

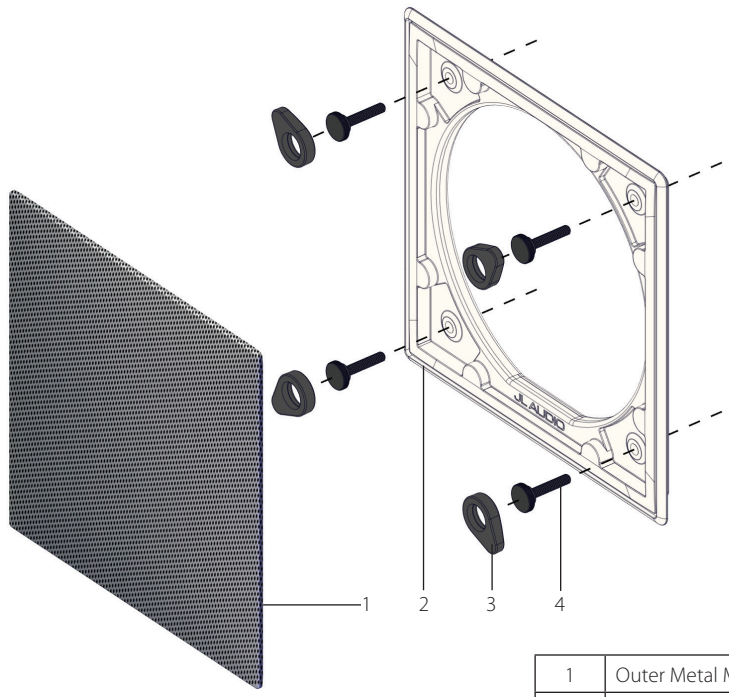

1	Outer Metal Mesh
2	Grille Tray
3	Rubber Stoppers
4	Thumb Screws

Grille Assembly

Thumb Screw Length	Wallboard Thickness
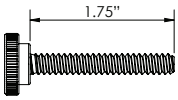 1/4-20 x 1.75 in.	1/2 in. to less than 1-1/16 in. 13 mm to less than 27 mm
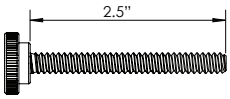 1/4-20 x 2.5 in.	1-1/16 in. to less than 1-3/4 in. 27 mm to less than 44 mm

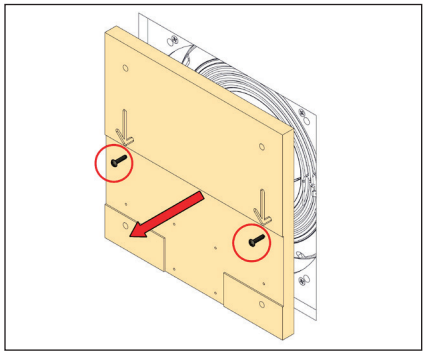

Figure 1

PRO-TIP:
You may find it easier to partially screw two screws into the center area of the template to use as a grip as you pull away.

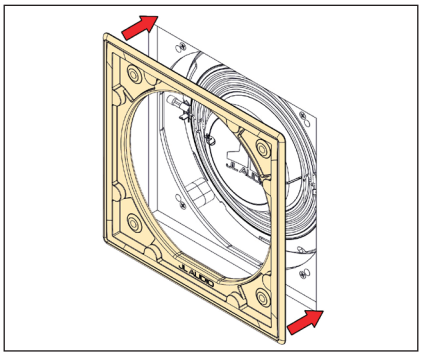

Figure 2

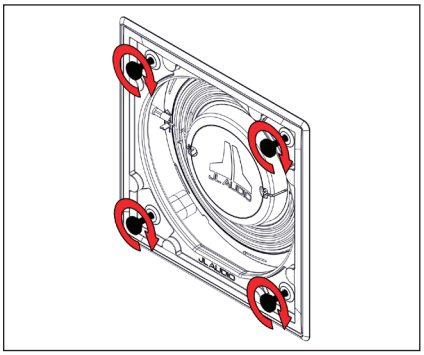

Figure 3

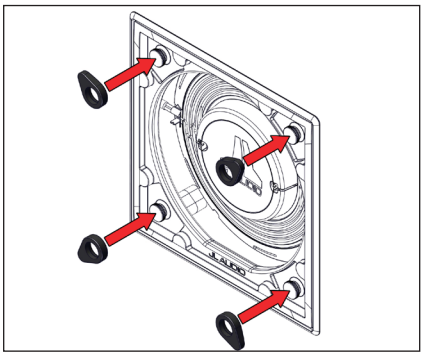

Figure 4

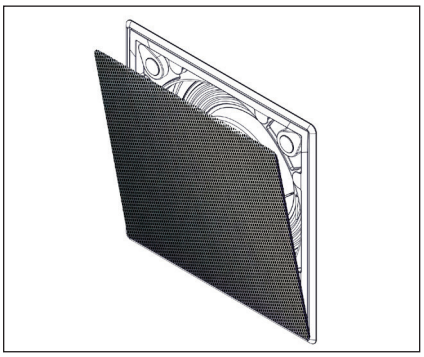

Figure 5

Grille Assembly Installation

With the Wallboard Template (Part A) removed, test fit the grille tray by inserting it into the opening with the JL Audio logo positioned at the bottom of the enclosure. **(Figure 2)** The grille tray's outer edge should make contact with the outer wallboard surface.

Refer to the table on the previous page to select the correct thumb screw length and secure the grille tray in place using four thumb screws, with each thumb screw installed into the threaded inserts located within the enclosure. Tighten each thumb screw by hand, being careful not to over tighten. **(Figure 3)**

Rubber screw stoppers are included to prevent the thumb screws from loosening. To install, press a rubber stopper over each thumb screw with the "THIS SIDE DOWN" imprint facing against the enclosure. Position each rubber stopper with its narrow tip pointing towards the corners of the grille tray. **(Figure 4)**

The outer metal mesh grille fits in the center of the grille tray and is held in place with embedded magnets. To install, simply bring the mesh grille near the grille tray, allowing the magnets to pull it into the recesses of the grille tray. **(Figure 5)**

This completes the installation of the IWG-108 grille.

Notes

Notes

8-inch Fathom® ICS Enclosure Specifications:

Specifications	Fathom® ICS-SYS-108	Fathom® ICS-SYS-208
Enclosure Type:	Single Ported Enclosure	Two Ported Enclosures
Driver(s):	8-in. (nominal diameter)	8-in. (nominal diameter) in each of two enclosures
Frequency Response (anechoic):	24.9 Hz - 109 Hz (+/- 1.5 dB) -3dB at 24.6 Hz / 111 Hz -10dB at 23.4 Hz / 118 Hz	
Effective Piston Area:	31.62 sq. in. 0.0204 sq. m.	63.24 sq. in. 0.0408 sq. m.
Effective Displacement:	47.5 cu. in. (0.78 liters)	95.0 cu. in. (1.56 liters)
2 x 6 Enclosure Dimensions: (H) Height x (W) Width x (D) Depth Does not include L-Brackets or padding material.	40.71 in. x 14.00 in. x 5.13 in. 1,034 mm x 355 mm x 130 mm	
Ceiling Joist Fitment Width:	16.00-inches to 25.50-inches on center	
Enclosure Finish:	Black Texture-Coated	
Grille Dimensions: (H) Height x (W) Width	10.50 in. x 10.50 in. 267 mm x 267 mm	
Wall Opening Dimensions: (H) Height x (W) Width	9.75 in. x 9.75 in. 248 mm x 248 mm	
Grille Finish:	White (paintable)	

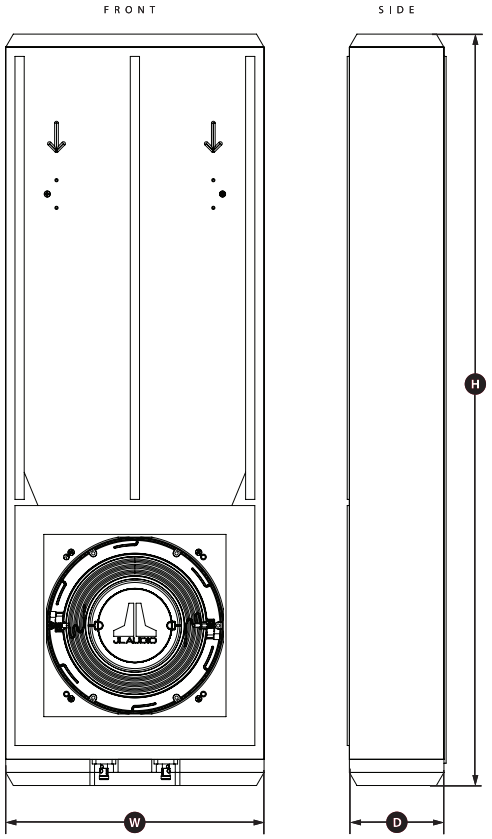

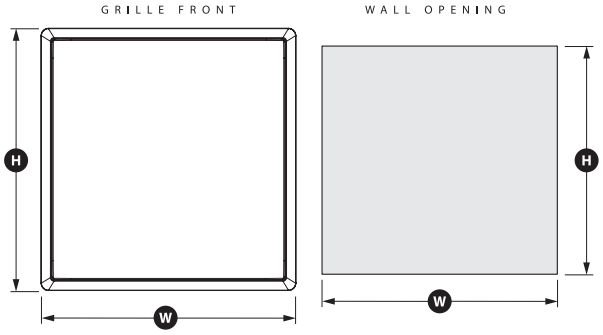

SKU#011511 111918
Printed in U.S.A.

"JL Audio", "Ahead of the Curve", "Fathom" and the JL Audio logo are registered trademarks of JL Audio, Inc.
©2018 JL Audio, Inc. • U.S. PATENTS: #6,229,902 #6,243,479 #6,294,959 #6,501,844 #6,496,590 #6,441,685 #6,219,431 #6,625,292 #D480,709 Other U.S. & Foreign patents pending. Due to our policy of continuous product development, all specifications are subject to change without notice.

www.jlaudio.com
10369 North Commerce Parkway • Miramar, Florida • 33025 • USA

CEDIA CUSTOM ELECTRONIC DESIGN & INSTALLATION ASSOCIATION Member

011511