JL AUDIO®

FATHOM® IWS

IN-WALL SUBWOOFER SYSTEMS

IWS-SYS-108
IWS-SYS-208

Enclosure Installation Manual

IMPORTANT SAFETY INSTRUCTIONS

1) **Read the Instructions** — All safety and operating instructions should be read before the subwoofer is operated.

2) **Retain the Instructions** — These instructions should be retained for future reference.

3) **Heed Warnings** — All warnings in these instructions should be followed.

4) **Water and Moisture** — The enclosure and subwoofer should NOT be used near water – for example, near a bathtub, washbowl, sink, laundry tub, in a wet basement, near a swimming pool, etc.

5) **Heat and Flames** — The enclosure and subwoofer should be situated away from heat sources such as radiators, heat registers, stoves, fireplaces, or other devices which produce heat. Do not place candles nearby.

6) **Object or Liquid Entry** — Care should be taken so that objects do not fall into and liquids are not spilled onto the enclosure, subwoofer or grille. Do not expose to dripping or splashing from liquids. Do not place objects filled with liquids nearby. For example: flower vases, beverages, liquid-fueled lamps, etc.

7) **Damage Requiring Service** — The subwoofer should be serviced by qualified service personnel when:
   a. objects have fallen or liquid has been spilled into the subwoofer
   b. the subwoofer has been exposed to rain
   c. the subwoofer does not appear to operate normally or exhibits a marked change in performance
   d. the subwoofer driver's cone and/or suspension has been physically damaged

WARNING

THIS SUBWOOFER IS CAPABLE OF PRODUCING VERY HIGH SOUND PRESSURE LEVELS. PLEASE EXERCISE RESTRAINT IN ITS OPERATION TO PROTECT YOUR HEARING FROM PERMANENT DAMAGE.

TABLE OF CONTENTS

Important Safety Instructions: 3
Introduction and Overview: 4
System Components: 5-7
Installation Hardware / Tools for Installation: 8
What's In The Box?: 9
Enclosure Installation Procedure: 10-18
Notes: 19
Specifications: 20

INTRODUCTION

Thank you for choosing the JL Audio Fathom In-Wall Subwoofer System, also known as the IWS.

This document contains detailed instructions for the installation of the Fathom IWS enclosure. Since a portion of the enclosure will be inaccessible after installation, we strongly recommend reading these instructions completely before beginning the installation process. Please note, these instructions are for the installation of one (1) IWS enclosure. Simply repeat the steps to install additional enclosures.

FATHOM IWS SYSTEM OVERVIEW

The Fathom IWS is offered in two options:

- IWS-SYS-108 includes all elements for the installa tion of one (1) subwoofer.
- IWS-SYS-208 includes all elements for the installation of two (2) subwoofers.

Each Fathom IWS System consists of four elements:

IWS-SYS-108	IWS-SYS-208
(1) Enclosure	(2) Enclosures
(1) Subwoofer	(2) Subwoofers
(1) Grille Assembly	(2) Grille Assemblies
(1) 300W Amplifier	(1) 600W Amplifier
Each system includes specialized hardware to ensure proper installation.	

THE ENCLOSURE

The Fathom IWS enclosure utilizes extensive architectural features aimed at improving rigidity while keeping a very low profile and minimal wall thickness. A unique port design vents through a slot located at the perimeter of the driver mount to enhance efficiency and low-bass output. Designed to fit snugly within a 2 x 4 stud wall cavity, the enclosure has various spacers and padding applied to specific areas, allowing it to only make gentle contact with its surrounding wallboard surfaces. The placement and amount of pressure applied by these pads is a critical design aspect to ensure proper fit and should not be altered in any way. Failure to use the proper enclosure and/or alteration of the spacers and padding will result in loss of performance and unwanted wall vibrations.

Enclosure Dimensions*
61.26-inches x 14-inches x 3.25-inches (1,565 mm x 355 mm x 83 mm)
*Dimensions listed are approximate and do not include various spacers and padding.

THE SUBWOOFER

Derived from JL Audio's groundbreaking technologies used to develop our free-standing powered subwoofers, the Fathom® IWS in-wall subwoofer systems deliver remarkable bass performance, while remaining largely concealed within most home audio/theater environments. The 8-inch diameter driver is smaller and easily integrates into all standard, 16-inch, on-center stud openings, and operating through very small grilles.

THE GRILLE ASSEMBLY

The grille assembly is comprised of a removable outer metal mesh and grille tray. The grille assembly should be installed only after the surrounding wallboard and grille assembly have been painted and the room's interior is free of construction debris. A plastic paint guard is included to shield the inner black section of the grille tray from overspray during painting. The grille tray and outer metal mesh grille should be painted separately to prevent them from sticking together.

Two sets of different length thumb screws are included with the grille assembly to fit a range of wallboard thicknesses. It is critical to use the correct thumb screw length for a proper fit. Refer to the table at right to select the thumb screw length that is compatible with the wallboard thickness used in your application.

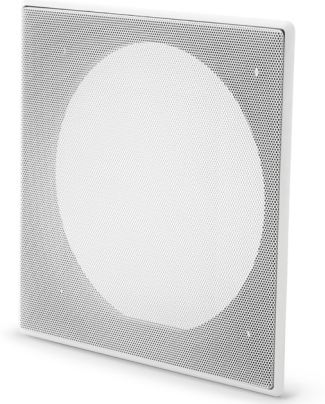

Thumb Screw Length	Wallboard Thickness
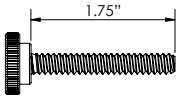 1/4-20 x 1.75 in.	1/2 in. to less than 1-1/16 in. 13 mm to less than 27 mm
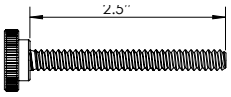 1/4-20 x 2.5 in.	1-1/16 in. to less than 1-3/4 in. 27 mm to less than 44 mm

THE AMPLIFIER

Engineered with powerful features and versatile functionality, the Fathom SA-600W is a state-of-the-art amplifier designed to power a top-flight subwoofer system in home theater and home audio systems.

Utilizing a precisely-engineered switching power supply, the SA-600W is capable of efficiently generating unclipped output voltages equivalent to 600 watts of RMS power, while remaining calm and stable. Managing all of the SA-600W's on-board features is an intuitively designed interface for adjusting all settings and controls with ease.

INSTALLATION HARDWARE

The Fathom IWS-108 enclosure package includes all parts and hardware necessary for the installation of one (1) enclosure. Since a portion of the enclosure will be inaccessible after installation, we strongly recommend reading these instructions completely before beginning the installation process. Please note, these instructions are for the installation of one (1) enclosure. Simply repeat the steps to install additional enclosures.

TOOLS FOR INSTALLATION

Below is a list of recommended tools to perform the installation of the Fathom IWS-108 enclosure. Depending on the specifics of your installation, you may need additional tools, hardware and/or accessories.

- Safety glasses
- Cordless drill/driver with #2 Phillips bit
- Wire strippers
- Wire cutters
- Pencil or Marker
- Tape measure (100-inch minimum)
- Drill bits
- Utility knife or scissors
- Right angle driver (optional)
- Drop cloth (optional)
- Masking tape (optional)

WHAT'S IN THE BOX?

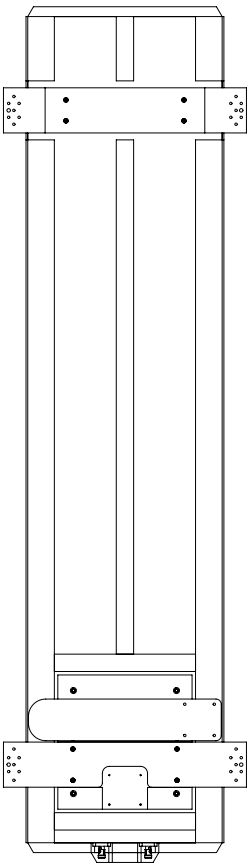 Enclosure with Pre-Attached parts* (x1)	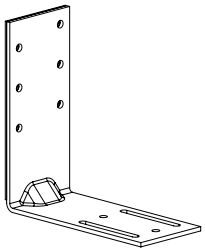 L-Brackets (x4)	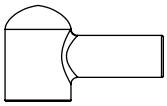 Terminal Covers (x2)	Foam Gasket (x1)
	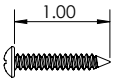 #8 x 1-inch Pan Head Screws (x22)	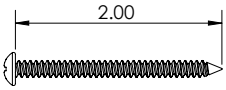 #8 x 2-inch Pan Head Screws (x8)	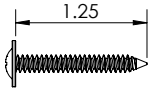 #8 x 1.25-inch Wafer Head Screws (x30)
	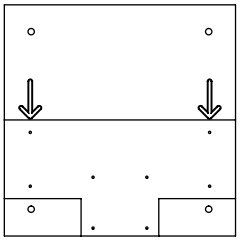 * Part A - Wallboard Template (x1)	* Part B - Upper Stud Mount (x1)	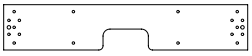 * Part C - Lower Stud Mount (x1)
			* Part D - Floor Support (x1)

ENCLOSURE INSTALLATION PROCEDURE

Prepping the Work Area

The steps and photos in this manual illustrate installation in new construction homes, however Fathom IWS-108 enclosures may also be installed in pre-existing construction applications. When working with pre-existing construction, you will need to open a stud bay and expose the studs on either side of the opening. For pre-existing construction installations, we recommend using masking tape and a drop cloth to protect the home's interior from construction debris. **For your safety, make sure there are no live electrical circuits/conduits within the stud bay prior to beginning the installation.**

Evaluating the Wall Cavity

The IWS-108 enclosure is designed to mount in between two studs, within the wall cavity, so anything coming into contact with it can lead to unwanted vibrations and rattles that cannot be accessed/corrected after the installation.

Before proceeding, verify that your wall cavity meets these requirements:

- At least 75-inches of unobstructed height (measured from the floor)
- Continuous width inside the studs, over the entire 75-inches must be no less than 14 3/8-inches and no greater than 15 ½-inches.
- A minimum 3 ½-inches of depth
- Studs on either side of the wall cavity should be straight, plumb and parallel, without any twisting or bowing.
- If your stud bay has any obstructions, such as wiring, conduits or cross-members, you'll need to discuss removing or relocating them with your general contractor, or you will need to choose a different stud bay.

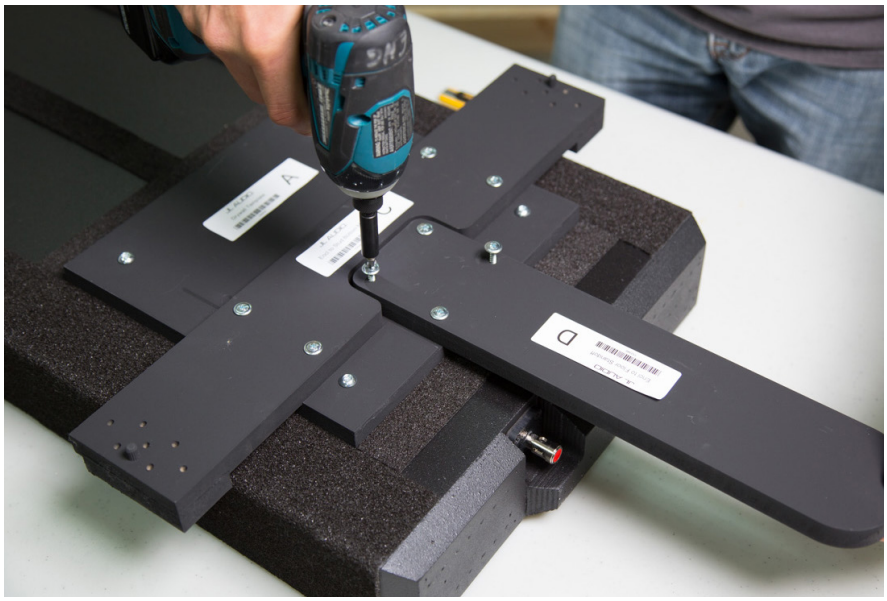

Figure 1

Figure 2

Figure 3

Figure 4

Attach the Floor Support (Part D)

To simplify installation, the enclosure is shipped with the following parts pre-attached:

Part A – Wallboard Template
Part B – Upper Stud Mount
Part C – Lower Stud Mount
Part D – Floor Support (shrink wrapped to enclosure)

Place the enclosure on a supported surface/table and remove the shrink wrap from the Enclosure/Floor Stand (Part D).

Position the Enclosure/Floor Stand (Part D) in the recessed area of the Wallboard Template (Part A) and Lower Stud Mount (Part C). Using the predrilled pilot holes as guides, install four #8 x 1.25-inch wafer head screws to attach the Enclosure/Floor Stand (Part D) to the Wallboard Template (Part A) **(Figure 1)**

Test Fit Enclosure

Place the enclosure into the wall cavity, with both Stud Mounts (Parts B & C) pressed against the stud faces and supported by the Enclosure/Floor Stand (Part D). **(Figure 2 & 3)**

Using the ends of the Stud Mounts (Parts B & C) as guides, adjust the enclosure's horizontal position to the center of the wall cavity.

To temporarily hold the enclosure's position, install one #8 x 2-inch black pan head screw through one of the guide holes located at each end of the Upper Stud Mount (Part B). Select the guide hole locations that will place each screw at or near the center of each stud. **(Figure 4)**

Mark the Top L-Bracket Locations

Place an L-Bracket on the top of the enclosure, with its foam padded section positioned against one stud. Mark a line along the L-Bracket's edge to note its position.

Repeat this procedure for the L-Bracket on the opposite side of the enclosure's top. **(Figure 5-7)**

Figure 5

Figure 6

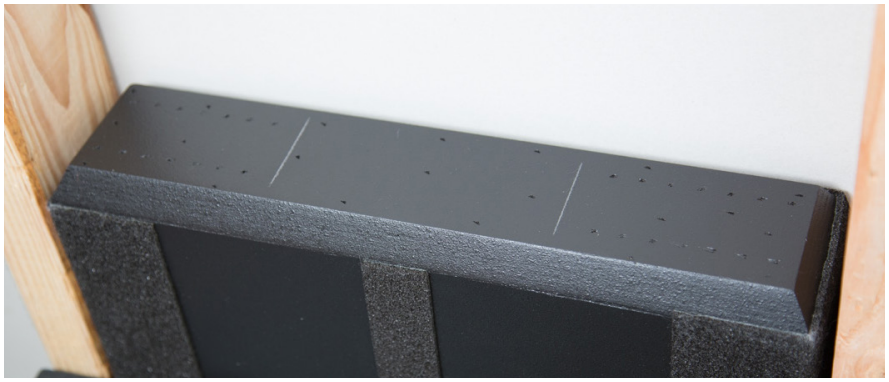

Figure 7

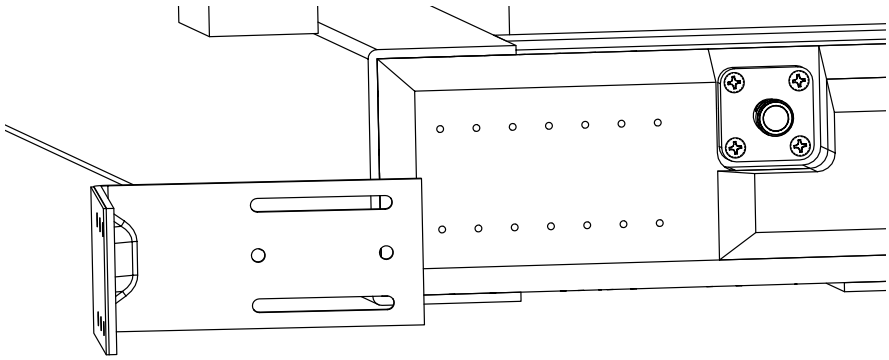

Figure 8

Figure 9

Figure 10

Figure 11

L-Bracket Installation

Remove the enclosure from the wall cavity and place on a supported surface/table. Each L-Bracket includes two slotted openings for installation over two rows of predrilled pilot holes located at each end of the enclosure's top and bottom. The slotted openings allow adjustment of the L-Brackets when mounting the enclosure within the wall cavity. **(Figure 8)**

Place an L-Bracket along one of the marked lines on the enclosure's top, with its slotted openings positioned over the pilot holes. Select two, non-adjacent pilot holes within each slotted opening (one to two holes apart) and fully install two #8 x 1-inch pan head screws. Then, partially back out each screw, leaving just one to two threads exposed beneath each screw head. The L-Bracket should remain loose, allowing it to slide for adjustment during installation. Repeat this procedure with the other marked line on the enclosure's top. **(Figure 9 & 10)**

Noting the L-Bracket screw locations on the enclosure's top, attach the two remaining L-Brackets to the enclosure's bottom in the same manner. Each screw should be installed in the same pilot hole locations as on the enclosure's top. **(Figure 11)**

Set the Enclosure's Final Position

Slide all four L-Brackets inward, then place the enclosure into the wall cavity, supported on the floor by the Enclosure/Floor Stand (Part D). Both Stud Mounts (Parts B & C) should be pressed against the stud faces.

Using a level and the ends of the Stud Mounts (Parts B & C) as guides, adjust the enclosure's horizontal position to the middle of the wall cavity. Centering the enclosure's position within the wall cavity, so that no sides of the enclosure are in contact with the studs, will reduce the potential for unwanted noise and vibration.

Install two #8 x 2-inch black pan head screws through the guide holes located at each end of the Stud Mounts (Parts B & C) to set the enclosure's position. Select the guide hole locations that will place each screw at or near the center of each stud. **(Figure 12 & 13)**

Uninstall the four #8 x 1.25-inch wafer head screws from the Enclosure/Floor Stand (Part D) and remove it for recycling.

Figure 12

Figure 13

Figure 14

Figure 15

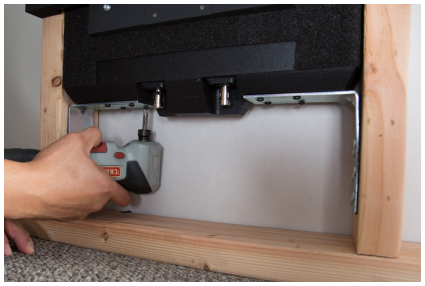

Figure 16

Figure 17

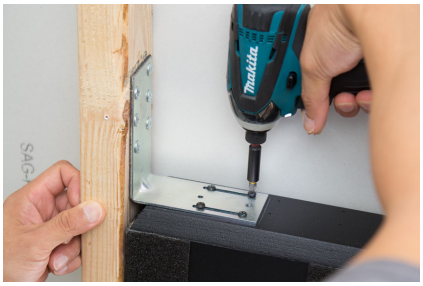

Figure 18

Figure 19

Mounting the Enclosure

At the enclosure's top, slide each L-Bracket outward and secure to each stud using six #8 x 1.25-inch wafer head screws per L-Bracket. (Figure 14)

At the enclosure's bottom, slide each L-Bracket outward and, while holding upward against the enclosure's bottom, install six #8 x 1.25-inch wafer head screws per L-Bracket to secure to each stud. Next, fully tighten all screws previously installed in the slotted openings of the bottom L-Brackets. (Figure 15 & 16) Lock the position of the bottom L-Brackets by installing a #8 x 1-inch pan head screw into one of the two holes located in between the slotted openings. (Figure 17)

At the enclosure's top, fully tighten all screws previously installed in the slotted openings of both L-Brackets. Lock the position of the top L-Brackets by installing a #8 x 1-inch pan head screw into one of the two holes located in between the slotted openings. (Figure 18 & 19)

Uninstall all screws from both Stud Mounts (Parts B & C) and remove them for recycling.

Route the Speaker Cable

Route speaker cable into the bottom of the wall cavity through an adjacent stud and remove the outer jacketing to expose the individual wires. Two rubber covers are included to insulate the speaker terminals. Feed the individual wires through each rubber cover and remove the wire insulation.

While observing correct polarity, connect the individual wires to the push terminals located at the bottom of the enclosure, then slide a rubber cover over each terminal. **(Figure 20-22)**

Note: To reduce the potential for unwanted noise and vibration, position the individual wires so they do not come into contact with any surrounding parts (enclosure, mounting brackets, studs, wallboard surfaces or any other surfaces within the wall cavity). Any contact point may lead to undesirable rattles or buzzing, which will be inaccessible once the surrounding wallboard has been installed.

Figure 20

Figure 21

Figure 22

Figure 24

Figure 23

Foam Gasket Installation

The included energy absorbing adhesive foam gasket strip is used to reduce the potential for noise and vibration between the studs and wallboard, especially in installations with metal stud construction.

Remove the backing and firmly press the foam gasket strip to all stud faces surrounding the wall cavity. Use a utility knife or scissors to cut and trim the edges of the foam gasket strip. **(Figure 23 & 24)**

Figure 25

Installing the Wallboard

Install the surrounding wallboard using the Wallboard Template (Part A) as a hard edge. The surrounding wallboard should be installed flush against the wallboard template on all four sides. **(Figure 25)**

Note: It is critical that any gaps between the wallboard template and surrounding wallboard does not exceed 1/8-inch. Use joint compound to fill any spaces greater than 1/8-inch. Once installed, the surrounding wallboard should be painted.

Figure 26

Wallboard Template Removal

To remove the Wallboard Template (Part A), uninstall the four 1/4 – 20 x 1.25-inch, T27 machine screws and lift it away from the enclosure. **(Figure 26)**

PRO-TIP:

You may find it easier to partially screw two screws into the center area of the template to use as a grip as you pull away from the wall.

GRILLE INSTALLATION PROCEDURE

Before you Begin

The following instructions assume the IWS Enclosure has already been installed.

The Grille Assembly

The grille assembly is comprised of a removable outer metal mesh and grille tray. The grille assembly should be installed only after the surrounding wallboard and grille assembly have been painted and the room's interior is free of construction debris. A plastic paint guard is included to shield the inner black section of the grille tray from overspray during painting. The grille tray and outer metal mesh grille should be painted separately to prevent them from sticking together.

Two sets of different length thumb screws are included with the grille assembly to fit a range of wallboard thicknesses. It is critical to use the correct thumb screw length for a proper fit. Refer to the table at right to select the thumb screw length that is compatible with the wallboard thickness used in your application.

Wallboard Template Removal

To remove the Wallboard Template (Part A), uninstall the four 1/4 – 20 x 1.25-inch, T27 machine screws and lift it away from the enclosure. **(Figure 1)**

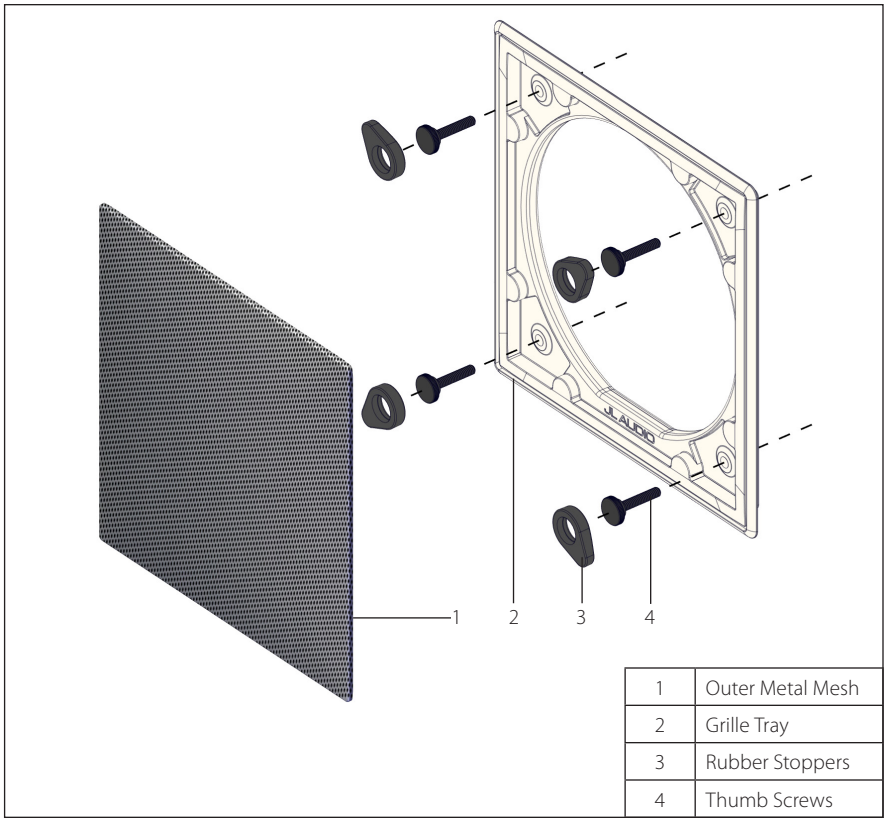

1	Outer Metal Mesh
2	Grille Tray
3	Rubber Stoppers
4	Thumb Screws

Grille Assembly

Thumb Screw Length	Wallboard Thickness
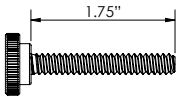 1/4-20 x 1.75 in.	1/2 in. to less than 1-1/16 in. 13 mm to less than 27 mm
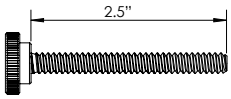 1/4-20 x 2.5 in.	1-1/16 in. to less than 1-3/4 in. 27 mm to less than 44 mm

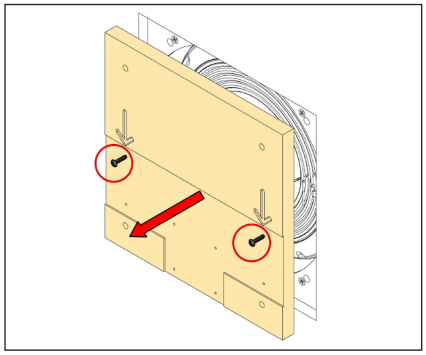

Figure 1

PRO-TIP:
You may find it easier to partially screw two screws into the center area of the template to use as a grip as you pull away from the wall.

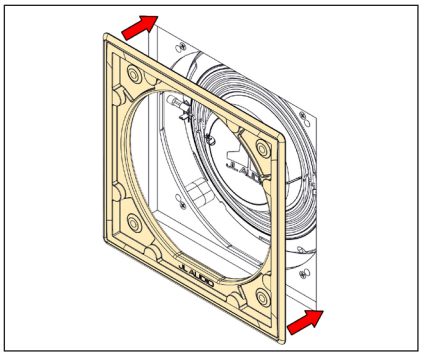

Figure 2

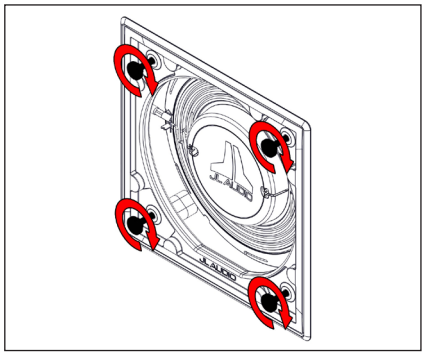

Figure 3

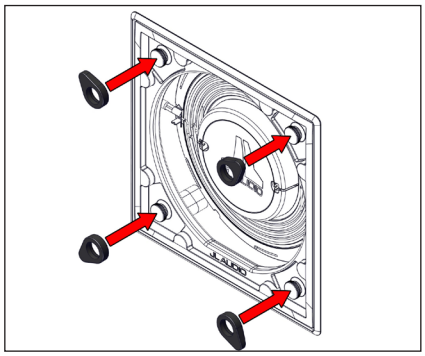

Figure 4

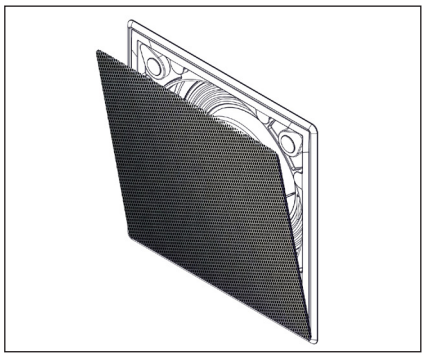

Figure 5

Grille Assembly Installation

With the Wallboard Template (Part A) removed, test fit the grille tray by inserting it into the opening with the JL Audio logo positioned at the bottom. **(Figure 2)** The grille tray's outer edge should make contact with the outer wallboard surface.

Refer to the table on page 2 to select the correct thumb screw length and secure the grille tray in place using four thumb screws, with each thumb screw installed into the threaded inserts located within the enclosure. Tighten each thumb screw by hand, being careful not to over tighten. **(Figure 3)**

Rubber screw stoppers are included to prevent the thumb screws from loosening. To install, press a rubber stopper over each thumb screw with the "THIS SIDE DOWN" imprint facing down. Position each rubber stopper with its narrow tip pointing towards the corners of the grille tray. **(Figure 4)**

The outer metal mesh grille fits in the center of the grille tray and is held in place with embedded magnets. To install, simply bring the mesh grille near the grille tray, allowing the magnets to pull it into the recesses of the grille tray. **(Figure 5)**

This completes the installation of the IWG-108 grille.

8-inch Fathom® IWS Enclosure Specifications:

Specifications	Fathom® IWS-SYS-108	Fathom® IWS-SYS-208
Enclosure Type:	Single Ported Enclosure	Two Ported Enclosures
Driver(s):	8-in. (nominal diameter)	8-in. (nominal diameter) in each of two enclosures
Frequency Response (anechoic):	24.9 Hz - 109 Hz (+/- 1.5 dB) -3dB at 24.6 Hz / 111 Hz -10dB at 23.4 Hz / 118 Hz	
Effective Piston Area:	31.62 sq. in. 0.0204 sq. m.	63.24 sq. in. 0.0408 sq. m.
Effective Displacement:	47.5 cu. in. (0.78 liters)	95.0 cu. in. (1.56 liters)
2 x 4 Enclosure Dimensions: (H) Height x (W) Width x (D) Depth Does not include L-Brackets or padding material.	61.26 in. x 14 in. x 3.25 in. 1,565 mm x 355 mm x 83 mm	
Cabinet Finish:	Black Texture-Coated	
Grille Dimensions: (H) Height x (W) Width	10.50 in. x 10.50 in. 267 mm x 267 mm	
Wall Opening Dimensions: (H) Height x (W) Width	9.75 in. x 9.75 in. 248 mm x 248 mm	
Grille Finish:	White (paintable)	

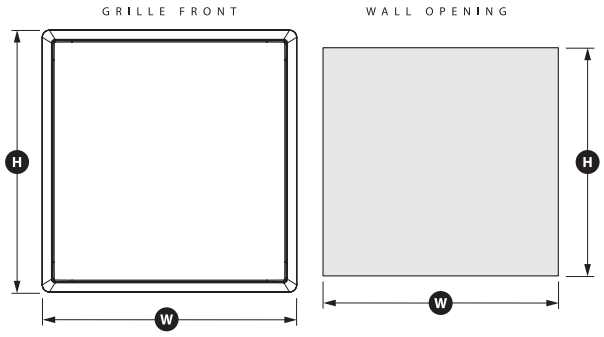

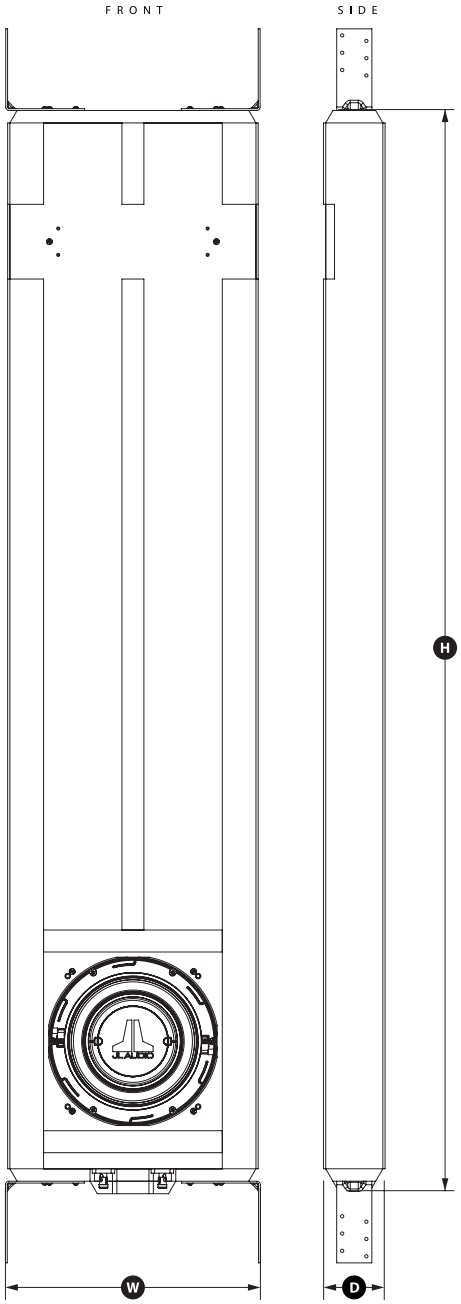

SKU#011480 101017
Printed in U.S.A.

"JL Audio", "Ahead of the Curve", "Fathom" and the JL Audio logo are registered trademarks of JL Audio, Inc.
©2017 JL Audio, Inc. • U.S. PATENTS: #6,229,902 #6,243,479 #6,294,959 #6,501,844 #6,496,590 #6,441,685 #6,219,431 #6,625,292 #D480,709 Other U.S. & Foreign patents pending. Due to our policy of continuous product development, all specifications are subject to change without notice.

www.jlaudio.com
10369 North Commerce Parkway • Miramar, Florida • 33025 • USA

CEDIA CUSTOM ELECTRONIC DESIGN & INSTALLATION ASSOCIATION Member

011480